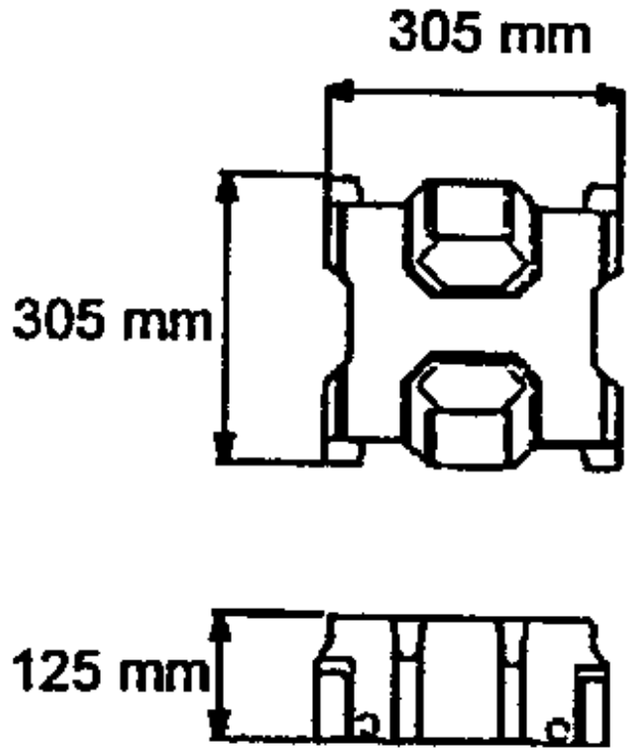

(a)

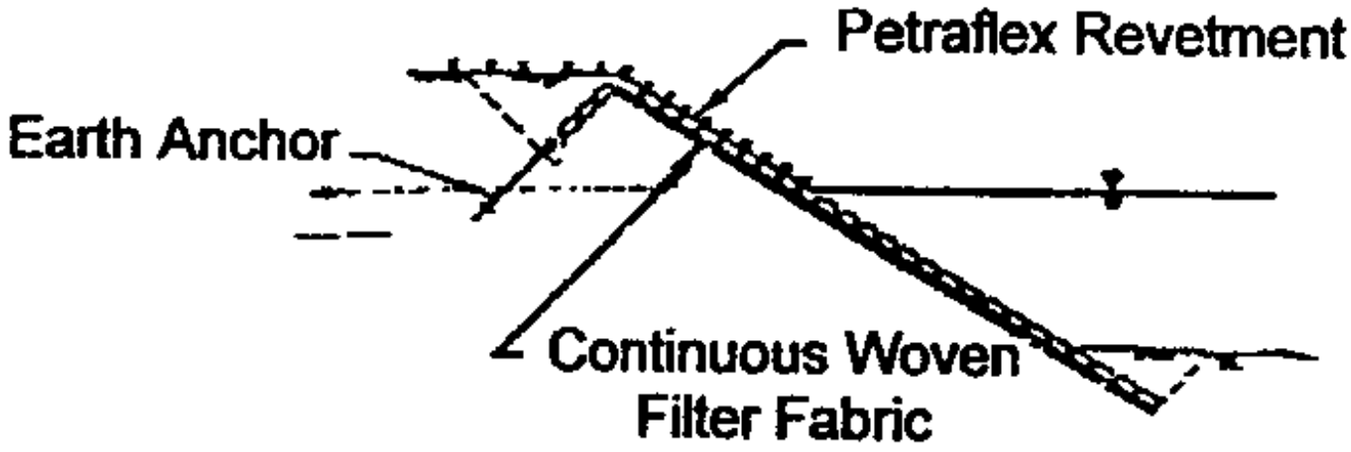

(b)

PETRAFLEX

((a) block detail and (b) revetment configuration)

Figure 38-6MM