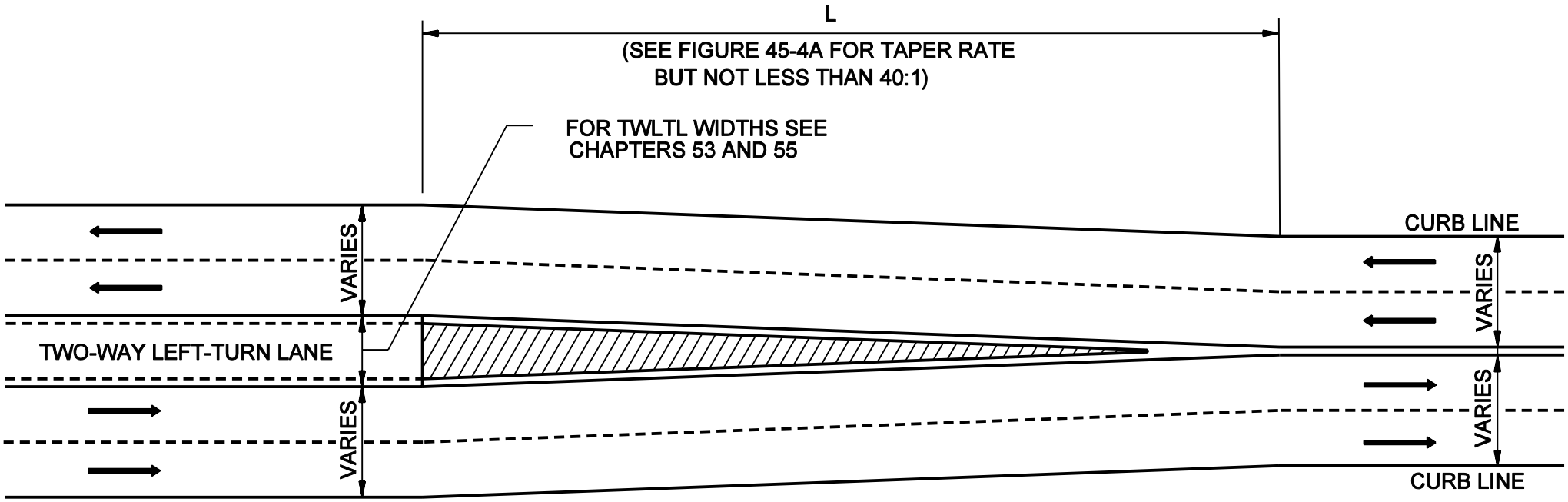

Note: See MUTCD, INDOT Standard Drawings and Chapter Seventy-six for proper striping and delineation detaiils.

TWO-WAY LEFT-TURN LANE TRANSITION

Figure 45-5D