PROJECT	DESIGNATION
0100701	0100701
CONTRACT	
R-30397	

INDIANA DEPARTMENT OF TRANSPORTATION

ROAD PLANS

PROJECT NO. 0100701 ( ) P.E.
0100701 ( ) R/W
0100701 ( ) CONST.

TRAFFIC DATA	U.S. 27 (Section 1) *	U.S. 27 (Section 2) **	U.S. 27 (Section 3) ***
A.A.D.T. (2017)	18,700 V.P.D.	18,700 V.P.D.	18,700 V.P.D.
A.A.D.T. (2037)	22,800 V.P.D.	22,800 V.P.D.	22,800 V.P.D.
D.H.V. (2037)	2,280 V.P.H.	2,280 V.P.H.	2,280 V.P.H.
DIRECTIONAL DISTRIBUTION	54 (Northbound) %	54 (Northbound) %	54 (Northbound) %
TRUCKS	6.0% A.A.D.T.	6.0% A.A.D.T.	6.0% A.A.D.T.
	8.0% D.H.V.	8.0% D.H.V.	8.0% D.H.V.
DESIGN DATA			
DESIGN SPEED	40 mph	30 mph	35 mph
PROJECT DESIGN CRITERIA	RECONSTR. (NON-FREEWAY)	RECONSTR. (NON-FREEWAY)	RECONSTR. (NON-FREEWAY)
FUNCTIONAL CLASSIFICATION	PRINCIPAL ARTERIAL	PRINCIPAL ARTERIAL	PRINCIPAL ARTERIAL
RURAL/URBAN	URBAN (SUBURBAN)	URBAN (BUILT-UP)	URBAN (INTERMEDIATE)
TERRAIN	LEVEL	LEVEL	LEVEL
ACCESS CONTROL	NONE	NONE	NONE

TRAFFIC DATA	NORTH "C" ST.	NORTH 10TH ST.
A.A.D.T. (2017)	1,500 - 6,000 V.P.D.	2,200 V.P.D.
A.A.D.T. (2037)	1,500 - 6,000 V.P.D.	3,300 V.P.D.
D.H.V. (2037)	150 - 600 V.P.H.	330 V.P.H.
DIRECTIONAL DISTRIBUTION	50 %	52 %
TRUCKS	10% A.A.D.T.	10% A.A.D.T.
	10% D.H.V.	10% D.H.V.
DESIGN DATA		
DESIGN SPEED	30 mph	30 mph
PROJECT DESIGN CRITERIA	RECONSTR. (NON-FREEWAY)	RECONSTR. (NON-FREEWAY)
FUNCTIONAL CLASSIFICATION	LOCAL STREET	MAJOR COLLECTOR
RURAL/URBAN	URBAN (BUILT-UP)	URBAN (BUILT-UP)
TERRAIN	LEVEL	LEVEL
ACCESS CONTROL	NONE	NONE

TRAFFIC DATA	S.R. 121
A.A.D.T. (2017)	8,800 V.P.D.
A.A.D.T. (2037)	15,800 V.P.D.
D.H.V. (2037)	1,420 V.P.H.
DIRECTIONAL DISTRIBUTION	54 %
TRUCKS	12% A.A.D.T.
	9% D.H.V.
DESIGN DATA	
DESIGN SPEED	30 mph
PROJECT DESIGN CRITERIA	RECONSTR. (NON-FREEWAY)
FUNCTIONAL CLASSIFICATION	MINOR ARTERIAL
RURAL/URBAN	URBAN (INTERMEDIATE)
TERRAIN	LEVEL
ACCESS CONTROL	NONE

US 27 FROM RP 20+00 TO RP 22+85

U.S. 27 PAVEMENT REPLACEMENT (SB LANES ONLY) FROM SOUTH "O" STREET TO NORTH "D" STREET, AND
PAVEMENT REPLACEMENT (BOTH NB LANES & SB LANES) FROM NORTH "F" STREET TO BRIDGE OVER WHITEWATER RIVER
LOCATED IN SECTIONS 4, 5, 8 & 9, T13N, R-1-W &
SECTIONS 32 & 33, T14N, R-1-W, WAYNE TOWNSHIP, WAYNE COUNTY, RICHMOND, INDIANA

GROSS LENGTH: 2.157 mi.
NET LENGTH: 1.886 mi.

PLAN: LONG.: 1" = 20'
TRANS: 1" = 20'

PROFILE: HORIZONTAL: 1" = 20'
VERTICAL: 1" = 5'

MAX. GRADE: 5.24%

SCALE: 1" = 2000'

END PROJECT 0100701
STA. 1221+80"PR-C-3"

BEGIN CONSTRUCTION
STA. 50+30.86"PR-S-121"

P.T. 1193+45.77"PR-D-2" =
P.O.T. 1192+37.87"PR-C-3", 13' Lt. =
P.O.T. 1192+38.01"C", 13.09' Lt.

BEGIN PROJECT EXCEPTION
STA. 1193+45.77"PR-D-2"

BEGIN CONSTRUCTION
STA. 40+60.00"NC"

P.O.T. 1186+87.66"D" (Bk.)=
P.C. 1186+87.66"PR-D-2" (Ah.) =
P.O.T. 50+00.00"NC-D" (Ah.)

END PROJECT EXCEPTION
STA. 1150+90"D"

BEGIN PROJECT EXCEPTION
STA. 1148+20"D"

P.T. 1113+55.44"PR-D-1" (Bk.) =
P.O.T. 1113+55.44"D" (Ah.)

BEGIN PROJECT 0100701
STA. 1109+00"PR-D-1"

P.O.T. 1106+96.68"PR-D-1" (Ah.) =
O.P.C. 1106+93.45"D", 18.5' Lt.

P.C. 1106+93.41"C" =
P.C. 1106+93.45"D"

END CONSTRUCTION
STA. 55+80.00"PR-S-121"

END CONSTRUCTION
STA. 74+92.41"NH10"

BEGIN CONSTRUCTION
STA. 70+85.35"NH10"

END PROJECT EXCEPTION
STA. 1204+00.00"PR-C-3"

END CONSTRUCTION
STA. 1192+37.70"PR-C-3"

END CONSTRUCTION
STA. 44+39.27"NC"

P.I. 1187+68.09"C" (Bk.)=
P.O.T. 1187+67.96"PR-C-3" (Ah.)

BEGIN CONSTRUCTION
STA. 1187+00"C"

END CONSTRUCTION
STA. 1171+60"C"

BEGIN CONSTRUCTION
STA. 1168+00"C"

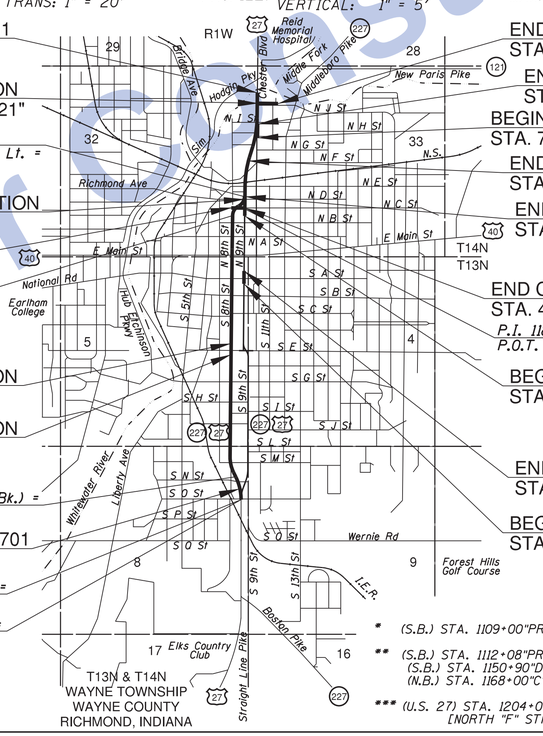

T13N & T14N
WAYNE TOWNSHIP
WAYNE COUNTY
RICHMOND, INDIANA

* (S.B.) STA. 1109+00"PR-D-1" TO STA. 1112+08"PR-D-1" [SOUTH "O" STREET TO SOUTH "N" STREET]

** (S.B.) STA. 1112+08"PR-D-1" TO STA. 1148+20"D" [SOUTH "N" STREET TO SOUTH "E" STREET]
(S.B.) STA. 1150+90"D" TO 1193+45.77"PR-D-2" [SOUTH "E" STREET TO NORTH "D" STREET]
(N.B.) STA. 1168+00"C" TO 1192+37.70"PR-C-3" [SOUTH "A" STREET TO NORTH "D" STREET]

*** (U.S. 27) STA. 1204+00"PR-C-3" TO STA. 1221+80.00"PR-C-3"
[NORTH "F" STREET TO 80' W. of WHITEWATER RIVER]

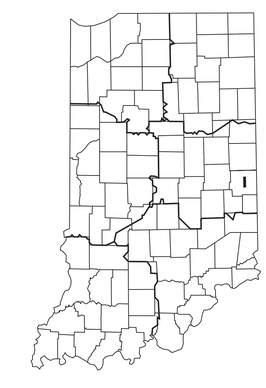

PROJECT LOCATION SHOWN BY

LONGITUDE: 84°53'25" W
LATITUDE: 39°49'44" N

INDIANA DEPARTMENT OF TRANSPORTATION
STANDARD SPECIFICATIONS DATED 2016
TO BE USED WITH THESE PLANS

Not for Construction

Clark Dietz
ENGINEERS

STAGE 3 PLANS
AUGUST 2016

PLANS PREPARED BY: Clark Dietz, Inc.
8900 Keystone Crossing, Ste. 900 (317) 844-8900
Indianapolis, IN 46240 PHONE NUMBER

CERTIFIED BY: _____ DATE

APPROVED FOR LETTING: _____
INDIANA DEPARTMENT OF TRANSPORTATION DATE

DESIGNATION
0100701

SURVEY BOOK	SHEETS
	1 of 278
CONTRACT	PROJECT
R-30397	0100701

12:07:28 PM 8/26/2016 P:\0170190\Plans\Misc\Title-US27.dgn

UTILITIES

SEWER

Richmond Sanitary District
2380 Liberty Ave.
Richmond, IN 47374

ATTN: Elijah Welch
TEL. : (765) 983-7483

CATV

Telecom Placement, Inc.
(Representing Comcast Northeast)
335 E. 10th Street
Anderson, IN 46016

ATTN: Buddy Cabiness
TEL. : (765) 622-2904
MOBILE : (765) 256-1651

TELEPHONE

Frontier Communications
(Formerly Verizon North Inc.)
1191 Rich Rd.
Richmond, IN 47374

ATTN: Jo Ann Anthony
TEL. : (765) 983-4506

ELECTRIC

Richmond Power & Light
2000 US 27 South
Richmond, IN 47374

PO Box 908
Richmond, IN 47375

ATTN: Scott Meinardi
TEL. : (765) 973-7400

GAS & ELECTRIC

Vectren Energy
1 N Main St.
Evansville, IN 47711

ATTN: Marty Frederick
TEL. : (812) 491-4765

Local Contact

Vectren Energy
3421 Chester Blvd.
Richmond, IN 47374

ATTN: Jeff Theobald
TEL. : (765) 939-4645

WATER

Indiana American Water
555 E. County Line Rd., Ste. 201
Greenwood, IN 46143

ATTN: Ezat Nayeri, P.E.
TEL. : (317) 885-2447
E-MAIL : ezat.nayeri@amwater.com

COMMUNICATIONS

Windstream
3701 Communications Way
Evansville, IN 47715

ATTN: Jeff Taylor
TEL. : (309) 838-0788

811
Know what's **below.**
Call before you dig.

GENERAL NOTES

**	All earth shoulders, median areas, cut and fill slopes shall be plain or mulch seeded except where sodding is specified.
**	The final cross sections of the grading contract will be the original cross sections of the paving contract. However, partial or complete cross sections shall be taken if necessary to determine the actual excavation quantities.
	The paper relocation will be cross sectioned by the Engineer before construction.
**	Existing asphalt pavement located outside the construction limits, between Sta. _____ and Sta. _____, shall be removed as directed. (To be completed)
	The quantity of peat excavation shown on the plans has been estimated on the basis of theoretical cross sections by using treatment of existing fills, treatment by removal, or treatment by displacement where each treatment applies.

** REPRESENTS GENERAL NOTES REQUIRED

INDEX

SHEET NO.	DESIGNATION
1	TITLE SHEET
2	GENERAL INFORMATION & INDEX SHEET
3 - 5	TYPICAL SECTIONS
6 - 10	PLAT NO. 1
11 - 12	REFERENCE POINTS
13 - 60	TRAFFIC MAINTENANCE DETAILS
61 - 90	EXISTING TOPOGRAPHY
91 - 121	PLAN & PROFILES
122 - 123	PAVEMENT TRANSITION DETAILS
124 - 125	RETAINING WALL DETAILS
126 - 153	INTERSECTION & SPOT ELEVATION DETAILS
154	CATCH BASIN DETAILS
155 - 167	CONCRETE PAVEMENT DETAILS
168 - 180	TREE LAYOUT DETAILS
181 - 192	STORMWATER MANAGEMENT DETAILS
193 - 209	SIGN DETAILS
210 - 215	TRAFFIC SIGNAL DETAILS
216	SIGNAL INTERCONNECT DETAIL
217 - 230	PAVEMENT MARKING DETAILS
231 - 232	STORMWATER MANAGEMENT TABLE
233 - 234	MISCELLANEOUS TABLE
235	TREE LAYOUT TABLE
236	REMOVAL ITEMS TABLE
237	RIPRAP & SODDING SUMMARY TABLE
238 - 252	SIGN TABLE
253 - 258	APPROACH TABLE
259 - 267	UNDERDRAIN TABLE
268 - 277	STRUCTURE DATA TABLE
278	PIPE MATERIAL TABLE
1 - 159	CROSS SECTIONS*

*CROSS SECTION SHEETS WILL BE RENUMBERED FOR FINAL TRACINGS SUBMISSION.

Plans and Cross Sections Organization

	Road	Alignment	Begin Incidental	Begin Construction	End Construction	End Incidental
Sec1&2	SB US 27	PR-D-1	1107+84.86	1109+00.00	1113+55.44	
Sec2	SB US 27	D		1113+55.44	1148+20.00	
Sec2	SB US 27	D		1150+90.00	1186+87.66	
Sec2	SB US 27	PR-D-2		1186+87.66	1193+45.77	
Sec3	US 27	PR-C-3	1202+44.49	1204+00.00	1221+80.00	1223+60.00
Sec2	NB US 27	C	1167+80.00	1168+00.00	1171+60.00	1172+02.60
Sec2	NB US 27	C	1186+50.00	1187+00.00	1187+68.09	
Sec2	NB US 27	PR-C-3		1187+67.96	1192+37.70	
	North "C" St.	NC		40+60.00	44+39.27	
	North 10th St.*	NH10		70+85.37	74+92.41	
	S.R. 121	PR-S-121		50+30.86	55+80.00	

*Cross Sections included on mainline sections.

Not for Construction

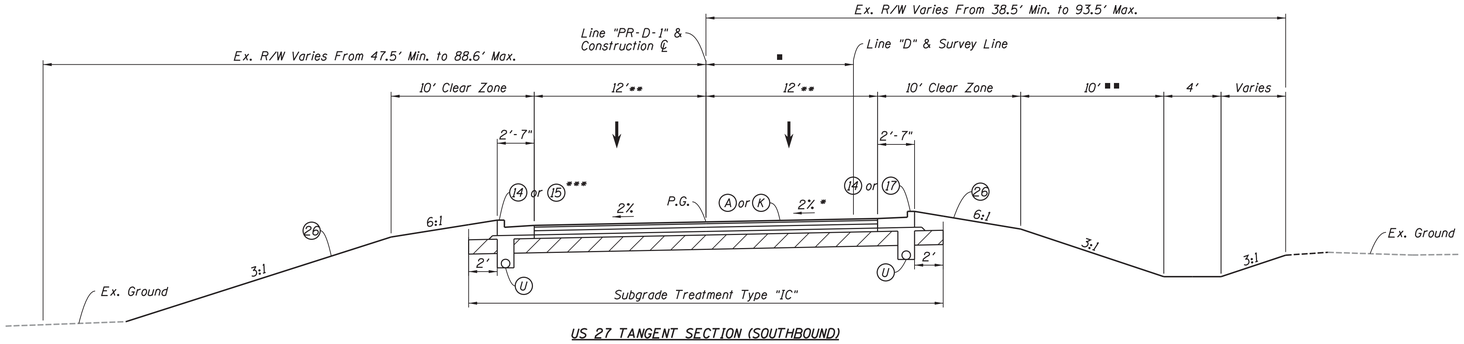

US 27 TANGENT SECTION (SOUTHBOUND)

STA. 1109+00"PR-D-1" TO STA. 1113+55.44"PR-D-1"
STA. 1113+55.44"D" TO STA. 1117+62.70"D"

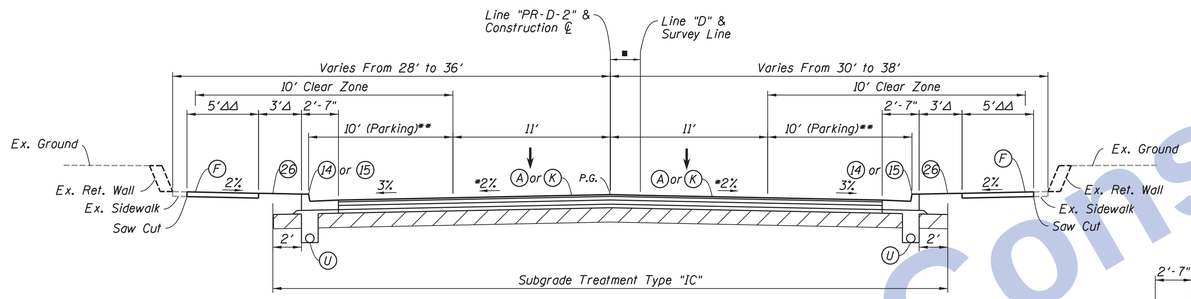

US 27 (SOUTHBOUND) TANGENT SECTION

STA. 1117+62.70"D" TO STA. 1148+20"D"
STA. 1150+90"D" TO STA. 1186+87.66"D"
STA. 1186+87.66"PR-D-2" TO STA. 1189+25.11"PR-D-2"

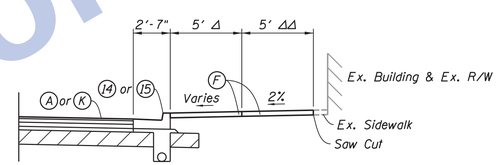

ALTERNATE SIDEWALK SECTION

STA. 1162+06"D" TO STA. 1187+50"PR-D-2" (LEFT)
STA. 1161+76"D" TO STA. 1187+50"PR-D-2" (RIGHT)
STA. 1187+00"C" TO STA. 1187+68.09"C" (LEFT & RIGHT)
STA. 1187+67.96"PR-C-3" TO STA. 1189+17"PR-C-3" (LEFT & RIGHT)

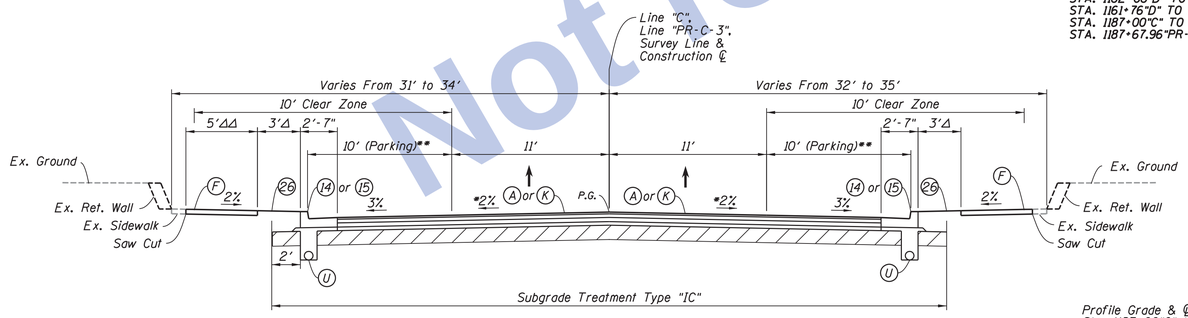

US 27 (NORTHBOUND) TANGENT SECTION

STA. 1168+00"C" TO STA. 1171+60"C"
STA. 1187+00"C" TO STA. 1187+68.09"C"
STA. 1187+67.96"PR-C-3" TO STA. 1189+17"PR-C-3"

Profile Grade & ℄ Construction Vary From 4' Rt ◎ Sta. 1187+00"C" to 6' Rt. ◎ Sta. 1187+50"C"

Profile Grade & ℄ Construction 6' Rt From Sta. 1187+50"C" to Sta. 1187+68.09"C"

Profile Grade & ℄ Construction 6' Rt From Sta. 1187+67.96"PR-C-3" to Sta. 1189+17"PR-C-3"

LEGEND

(A) Plain Jointed OC/OA-PCCP, 9.5 in. (Alternate) on Subbase for PCCP on Subgrade Treatment, Type IC

(F) Sidewalk, Concrete

(K) Full Depth OC/OA-HMA Pavement
165#/syd OC/OA-HMA, 3, 70, Surface, 9.5 mm, on
330#/syd OC/OA-HMA, 3, 70, Intermediate, 19.0 mm, on
385#/syd OC/OA-HMA, 3, 64, Base, 19.0 mm, on
330#/syd OC/OA-HMA, 3, 64, Base, 19.0 mm on
Subgrade Treatment, Type IC

(U) 6" Type 4 Pipe for Underdrain

(14) Integral Concrete Curb

(15) Concrete Curb & Gutter

(16) Concrete Curb & Gutter, 2' Modified

(17) Concrete Curb & Gutter, Modified

(26) Sodding, Nursery

* Slope of Inside Lane Varies From -2% to +2%. (See Pavement Transition Diagram)

** Southbound
8' From Sta. 1112+00"PR-D-1" to Sta. 1117+62.70"D"
0' From Sta. 1186+87.66"PR-D-2" to Sta. 1189+25.11"PR-D-2" (Right & Left)

Northbound
0' From Sta. 1168+00"C" to Sta. 1170+00"C" (Right)
0' From Sta. 1187+00"C" to Sta. 1189+17"PR-C-3" (Left & Right)

■ Southbound
Varies From 18.5' ◎ Sta. 1109+00"PR-D-1" to 2.1' ◎ Sta. 1112+00"PR-D-1"
Varies From 2.1' ◎ Sta. 1112+00"PR-D-1" to 0' ◎ Sta. 1113+55.44"PR-D-1"
0' From Sta. 1113+55.44"D" to Sta. 1186+87.66"D"
Varies From 0' ◎ Sta. 1186+87.66 "PR-D-2" to 36.8' ◎ Sta. 1189+25.11"PR-D-2"

■■ 10' for Standard Ditch Section See Plan & Profile for Special Ditch Grades.

Δ Southbound
0' From Sta. 1117+62.70"D" to Sta. 1122+14"D" (Right)
5' From Sta. 1158+72.9"D" to Sta. 1162+06"D" (Left)
5' From Sta. 1159+95"D" to Sta. 1161+76"D" (Right)

Northbound
7' From Sta. 1178+00"C" to Sta. 1186+00"C" (Right)
0' From Sta. 1187+00"C" to Sta. 1187+68.09"C" (Right)
0' From Sta. 1187+67.96"PR-C-3" to Sta. 1189+17"PR-C-3" (Right)

ΔΔ Southbound
0' From Sta. 1117+62.70"D" to Sta. 1122+14"D" (Right)

Northbound
6' From Sta. 1187+00"C" to Sta. 1187+68.09"C" (Left)
6' From Sta. 1187+67.96"PR-C-3" to Sta. 1189+17"PR-C-3" (Left)
6' From Sta. 1187+00"C" to Sta. 1187+68.09"C" (Right)
6' From Sta. 1187+67.96"PR-C-3" to Sta. 1189+17"PR-C-3" (Right)

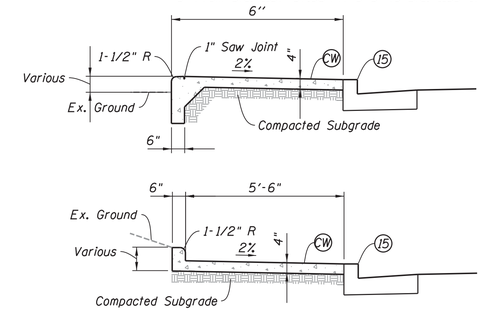

DETAILS FOR CURB WALK, CONCRETE

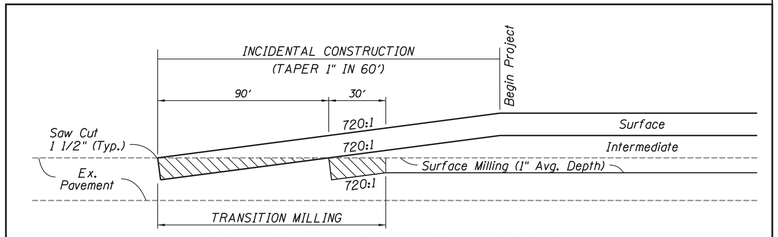

RESURFACING TRANSITION DETAIL

TO BE USED AT BEGINNING AND ENDING OF THE PROJECT (REVERSE FOR END OF PROJECT).

NOT TO SCALE

Clark Dietz ENGINEERS

Alternate Pavement Design Notes:

Plan & Profile sheets show HMA Pavement Option.
(K) would be replaced with (A) if PCCP Pavement Option is used.
(K1) would be replaced with (A1) if PCCP Pavement Option is used.
Plan & Profile sheets show Concrete Curb & Gutter for HMA option.
Integral Concrete Curb will be used for PCCP Pavement Option when curb is adjacent to mainline U.S. 27 or S.R. 121.

Notes:

1. The HMA Option is Shown for All Typical Sections.
2. Liquid Asphalt Sealant & Joint Adhesive apply to HMA Sections only.
3. All Plain Jointed OC/OA - PCCP, 9.5 in. shall have "D-1" Contraction Joints Spaced at 15 ft. & Dowel Bar Diameter of 1.25 in.

RECOMMENDED FOR APPROVAL _____ DESIGN ENGINEER DATE

DESIGNED: JAL DRAWN: MP
CHECKED: RBI CHECKED: JAL

INDIANA
DEPARTMENT OF TRANSPORTATION

TYPICAL CROSS SECTION
US 27

HORIZONTAL SCALE	BRIDGE FILE
NONE	
VERTICAL SCALE	DESIGNATION
NONE	0100701
SURVEY BOOK	SHEETS
	3 of 278
CONTRACT	PROJECT
R-30397	0100701

Not for Construction

12:07:33 PM 8/26/2016 P:\0170190\Plans\Misc\TYP_HMA_01.dgn

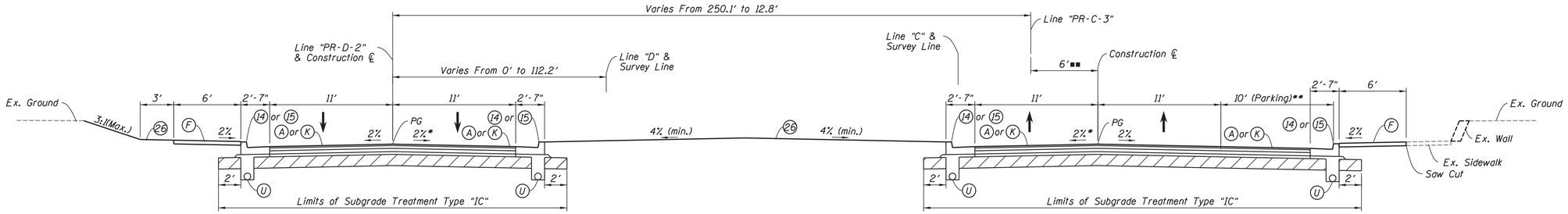

US 27 TANGENT SECTION (SOUTHBOUND)

STA. 1189+25.11"PR-D-2" TO STA. 1193+45.77"PR-D-2"

US 27 TANGENT SECTION (NORTHBOUND)

STA. 1189+17"PR-C-3" TO STA. 1192+37.70"PR-C-3"

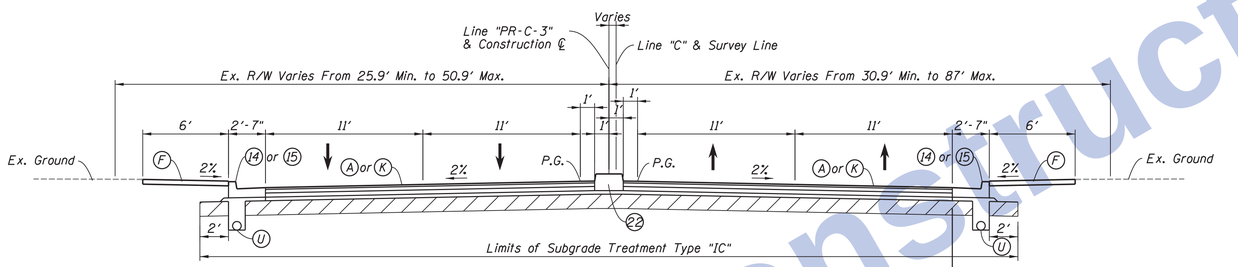

US 27 TANGENT SECTION

STA. 1204+00"PR-C-3" TO STA. 1214+96"PR-C-3"

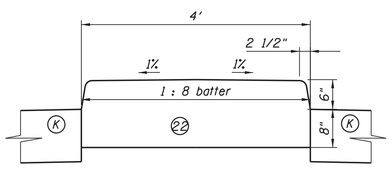

MODIFIED CONCRETE CENTER CURB TYPE "D"

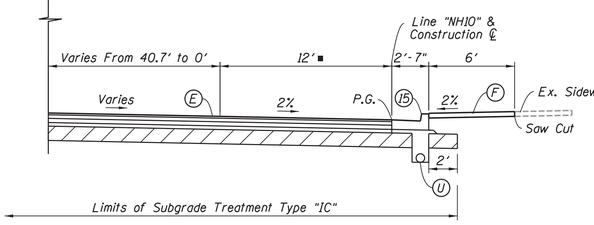

NORTH 10th STREET TANGENT SECTION

STA. 70+85.37"NH10" TO STA. 74+92.41"NH10"

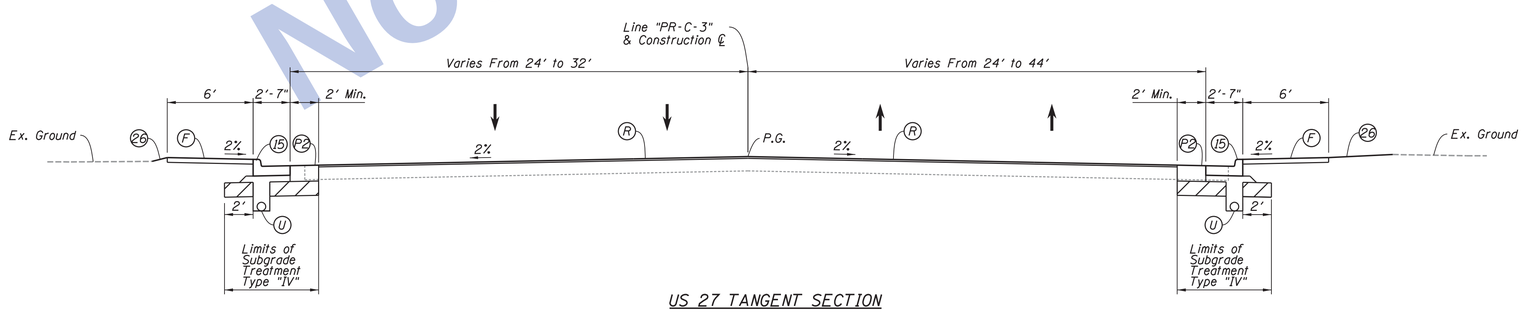

US 27 TANGENT SECTION

STA. 1214+96"PR-C-3" TO STA. 1221+80"PR-C-3"

LEGEND

(A) Plain Jointed QC/QA-PCCP, 9.5 in. (Alternate) on Subbase for PCCP on Subgrade Treatment, Type IC

(E) HMA for Approaches
165#/syd QC/QA-HMA, 3, 70, Surface, 9.5 mm, on
330#/syd QC/QA-HMA, 3, 70, Intermediate, 19.0 mm, on
385#/syd QC/QA-HMA, 3, 64, Base, 19.0 mm, on
330#/syd QC/QA-HMA, 3, 64, Base, 19.0 mm) on
Subgrade Treatment, Type IC

(F) Sidewalk, Concrete

(K) Full Depth QC/QA-HMA Pavement
165#/syd QC/QA-HMA, 3, 70, Surface, 9.5 mm, on
330#/syd QC/QA-HMA, 3, 70, Intermediate, 19.0 mm, on
385#/syd QC/QA-HMA, 3, 64, Base, 19.0 mm, on
330#/syd QC/QA-HMA, 3, 64, Base, 19.0 mm on
Subgrade Treatment, Type IC

(P2) HMA for Structure Installation, Type C
165#/syd QC/QA-HMA, 3, 70, Surface, 9.5 mm, on
330#/syd QC/QA-HMA, 3, 70, Intermediate, 19.0 mm, on
385#/syd QC/QA-HMA, 3, 64, Base, 19.0 mm, on
330#/syd QC/QA-HMA, 3, 64, Base, 19.0 mm on
Subgrade Treatment, Type IV

(R) Transition Milling (Up to 3" Depth) and Asphalt Resurfacing
165 #/Syd. QC/QA-HMA, 3, 70, Surface, 9.5 mm, on
330 #/Syd. QC/QA-HMA, 3, 70, Intermediate, 19.0 mm

(U) 6" Type 4 Pipe for Underdrain

(14) Integral Concrete Curb

(15) Concrete Curb & Gutter

(22) Concrete Center Curb Type "D", Modified

(26) Sodding, Nursery

* Slope of Inside Lane Varies From -2% to +2% (See Pavement Transition Diagram)

** Varies From 10' @ 1191+25"PR-C-3" to 0' @ 1192+37.70"PR-C-3" (No Parking)

■ Varies From 12' @ Sta. 73+48.08"NH10" to 0' @ 74+92.41"NH10"

■■ Varies From 6' @ Sta. 1191+00"PR-C-3" to 12' @ Sta. 1192+00 "PR-C-3" 12' From 1192+00"PR-C-3" to 1192+37.70"PR-C-3"

Not for Construction

Clark Dietz ENGINEERS

Alternate Pavement Design Notes:

Plan & Profile sheets show HMA Pavement Option.
(K) would be replaced with (A) if PCCP Pavement Option is used.
(K1) would be replaced with (A1) if PCCP Pavement Option is used.
Plan & Profile sheets show Concrete Curb & Gutter option.
Integral Concrete Curb will be used for PCCP Pavement Option when curb is adjacent to mainline U.S. 27 or S.R. 121.

Notes:

1. The HMA Option is Shown for All Typical Sections.
2. Liquid Asphalt Sealant & Joint Adhesive apply to HMA Sections only.
3. All Plain Jointed QC/QA - PCCP, 9.5 in, shall have "D-1" Contraction Joints Spaced at 15 ft. & Dowel Bar Diameter of 1.25 in.

RECOMMENDED FOR APPROVAL _____ DESIGN ENGINEER DATE

DESIGNED: JAL DRAWN: MP

CHECKED: RBI CHECKED: JAL

INDIANA DEPARTMENT OF TRANSPORTATION

TYPICAL CROSS SECTION US 27

HORIZONTAL SCALE	BRIDGE FILE
NONE	
VERTICAL SCALE	DESIGNATION
NONE	0100701
SURVEY BOOK	SHEETS
	4 of 278
CONTRACT	PROJECT
R-30397	0100701

12:07:34 PM 8/26/2016 P:\0170190\Plans\Misc\TYP_HMA_02.dgn

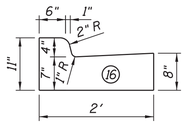

CONCRETE CURB & GUTTER, 2' MODIFIED

FROM STA. 1177+25"D" RT. TO STA. 1178+05"D" RT.

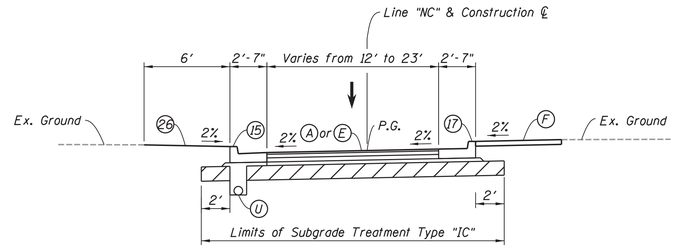

NORTH C STREET

STA. 40+60.00"NC" TO STA. 44+39.27"NC"

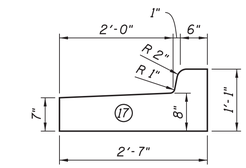

CONCRETE CURB & GUTTER, MODIFIED

STA. 1107+84.90"PR-D-1" RT. TO STA. 1111+47.60"PR-D-1" RT.
STA. 1112+36.00"PR-D-1" RT. TO STA. 1113+55.40"PR-D-1" RT.
STA. 1113+55.40"D" RT. TO STA. 1114+90.70"D" RT.
STA. 42+46.30"NC" RT. TO STA. 43+90.70"NC" RT.

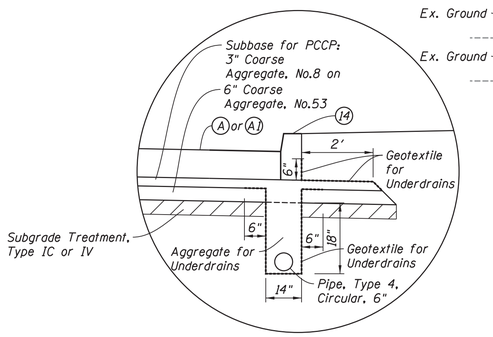

CURB & GUTTER
UNDERDRAIN DETAIL
FOR PCCP

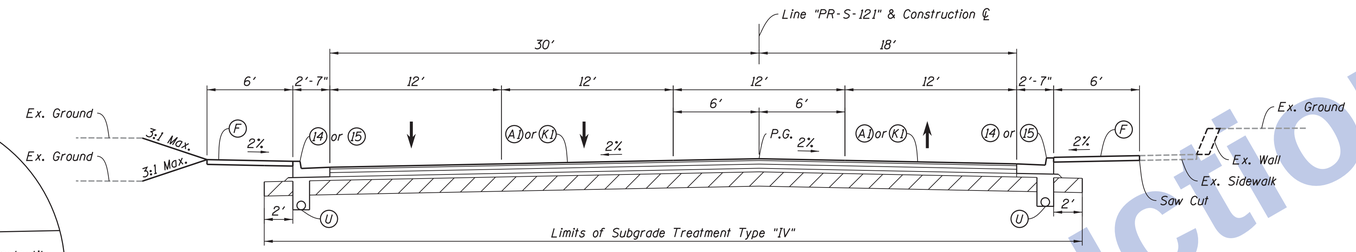

SR 121 TANGENT SECTION

STA. 50+30.86"PR-S-121" TO STA. 55+80.00"PR-S-121"

LEGEND

- (A) Plain Jointed QC/QA-PCCP, 9.5 in. (Alternate) on Subbase for PCCP on Subgrade Treatment, Type IC
- (A1) Plain Jointed QC/QA-PCCP, 9.5 in. (Alternate) on Subbase for PCCP on Subgrade Treatment, Type IV
- (E) HMA for Approaches
  (165#/syd QC/QA-HMA, 3, 70, Surface, 9.5 mm, on
  330#/syd QC/QA-HMA, 3, 70, Intermediate, 19.0 mm, on
  385#/syd QC/QA-HMA, 3, 64, Base, 19.0 mm, on
  330#/syd QC/QA-HMA, 3, 64, Base, 19.0 mm) on
  Subgrade Treatment, Type IC
- (E1) HMA for Approaches
  (165#/syd QC/QA-HMA, 3, 70, Surface, 9.5 mm, on
  330#/syd QC/QA-HMA, 3, 70, Intermediate, 19.0 mm, on
  385#/syd QC/QA-HMA, 3, 64, Base, 19.0 mm, on
  330#/syd QC/QA-HMA, 3, 64, Base, 19.0 mm) on
  Subgrade Treatment, Type IV
- (F) Sidewalk, Concrete
- (K1) Full Depth QC/QA-HMA Pavement
  165#/syd QC/QA-HMA, 3, 70, Surface, 9.5 mm, on
  330#/syd QC/QA-HMA, 3, 70, Intermediate, 19.0 mm, on
  385#/syd QC/QA-HMA, 3, 64, Base, 19.0 mm, on
  330#/syd QC/QA-HMA, 3, 64, Base, 19.0 mm on
  Subgrade Treatment, Type IV
- (U) 6" Type 4 Pipe for Underdrain
- (14) Integral Concrete Curb
- (15) Concrete Curb & Gutter
- (16) Concrete Curb & Gutter, 2' Modified
- (17) Concrete Curb & Gutter, Modified
- (22) Concrete Center Curb Type "D", Modified
- (26) Sodding, Nursery

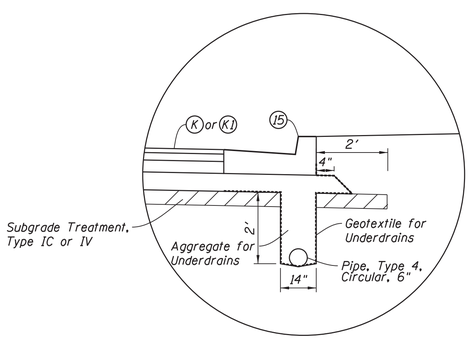

CURB & GUTTER
UNDERDRAIN DETAIL
FOR HMA

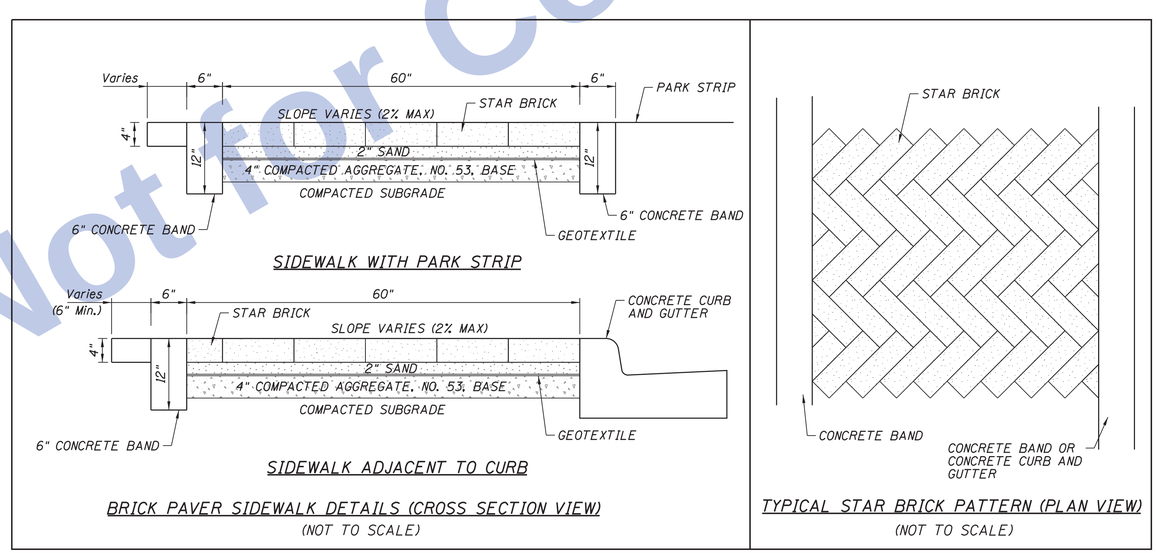

BRICK PAVER SIDEWALK DETAILS (CROSS SECTION VIEW)

(NOT TO SCALE)

TYPICAL STAR BRICK PATTERN (PLAN VIEW)

(NOT TO SCALE)

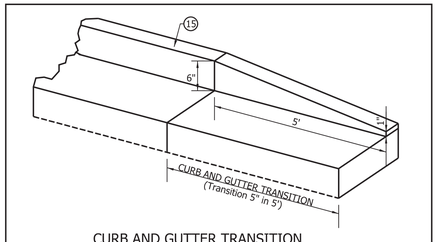

CURB AND GUTTER TRANSITION
ISOMETRIC VIEW

Not for Construction

Clark Dietz
ENGINEERS

Alternate Pavement Design Notes:

Plan & Profile sheets show HMA Pavement Option.
(K) would be replaced with (A) if PCCP Pavement Option is used.
(K1) would be replaced with (A1) if PCCP Pavement Option is used.
Plan & Profile sheets show Concrete Curb & Gutter option.
Integral Concrete Curb will be used for PCCP Pavement Option when curb is adjacent to mainline U.S. 27 or S.R. 121.

Notes:

1. The HMA Option is Shown for All Typical Sections.
2. Liquid Asphalt Sealant & Joint Adhesive apply to HMA Sections only.
3. All Plain Jointed QC/QA - PCCP, 9.5 in, shall have "D-1" Contraction Joints Spaced at 15 ft. & Dowel Bar Diameter of 1.25 in.

RECOMMENDED FOR APPROVAL _____ DESIGN ENGINEER DATE

DESIGNED: JAL DRAWN: MP
CHECKED: RBI CHECKED: JAL

INDIANA
DEPARTMENT OF TRANSPORTATION

TYPICAL CROSS SECTION
US 27

HORIZONTAL SCALE	BRIDGE FILE
NONE	
VERTICAL SCALE	DESIGNATION
NONE	0100701
SURVEY BOOK	SHEETS
	5 of 278
CONTRACT	PROJECT
R-30397	0100701

12:07:36 PM 8/26/2016 P:\0170190\Plans\Misc\TYP_HMA_03.dgn

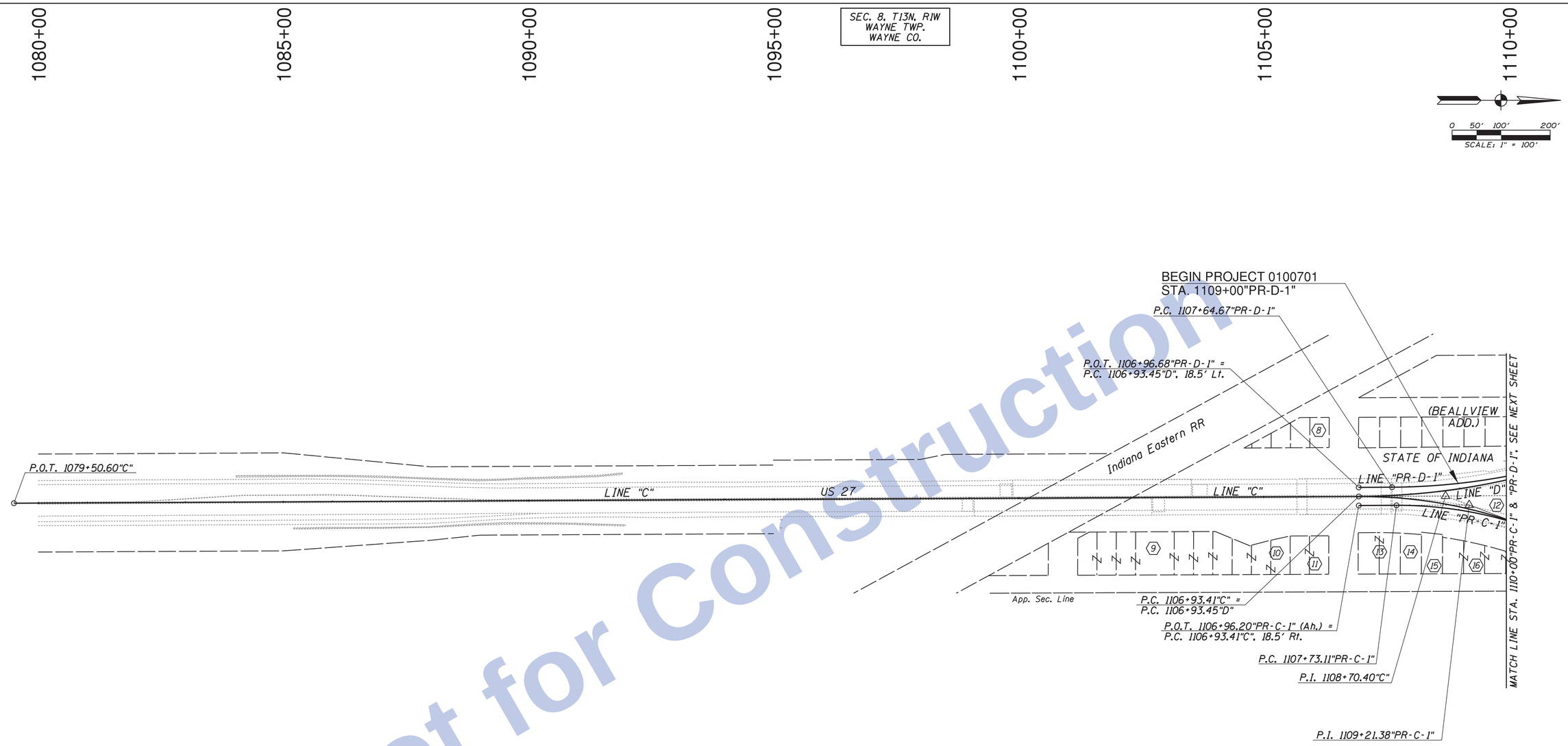

Not for Construction

Index No.	Owner
8	MOSEY REAL ESTATE, INC.
9	BLEDSOE, ANTHONY A. & DIANNE UND 1/2 INT JOHN & ROBIN ET ALL
10	MC COWN, HARVEY & BARBARA E
11	BOLT, JOSEPH H IV
12	STATE OF INDIANA
13	BOND, THOMAS E JR
14	BOND, THOMAS EDWARD
15	BARKER, DAVID A & DEBRA K
16	WOOLUM, L J & BARBARA

12:07:38 PM 8/26/2016 P:\0170190\Plans\Misc\PLAT1_02.dgn

Clark Dietz
ENGINEERS

RECOMMENDED FOR APPROVAL _____ DESIGN ENGINEER DATE

DESIGNED: JAL DRAWN: MP
CHECKED: RBI CHECKED: JAL

INDIANA
DEPARTMENT OF TRANSPORTATION

PLAT NO. 1
US 27

HORIZONTAL SCALE	BRIDGE FILE
1" = 100'	
VERTICAL SCALE	DESIGNATION
NONE	0100701
SURVEY BOOK	SHEETS
	6 of 278
CONTRACT	PROJECT
R-30397	0100701

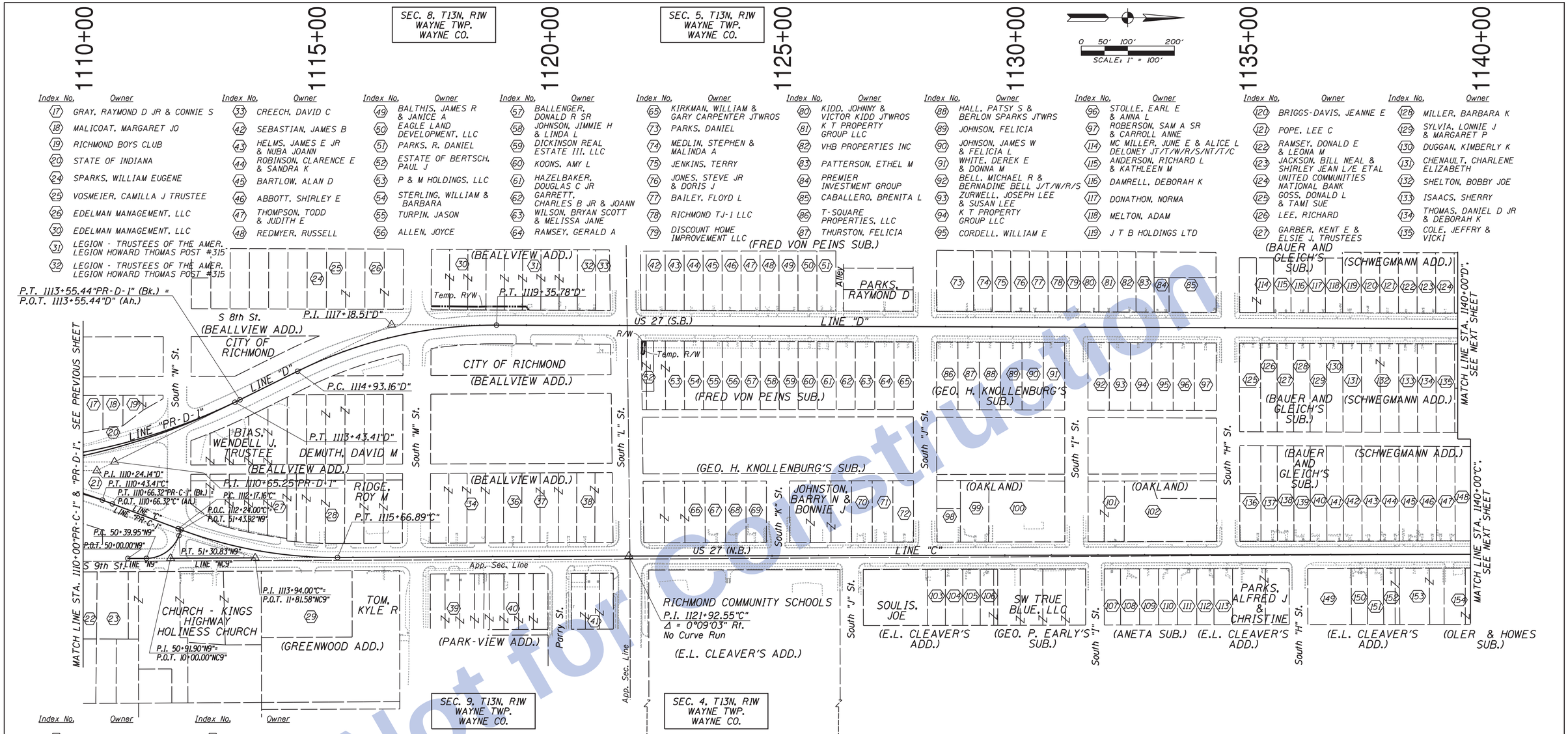

Index No.	Owner
17	GRAY, RAYMOND D JR & CONNIE S
18	MALICOAT, MARGARET JO
19	RICHMOND BOYS CLUB
20	STATE OF INDIANA
24	SPARKS, WILLIAM EUGENE
25	VOSMEIER, CAMILLA J TRUSTEE
26	EDELMAN MANAGEMENT, LLC
30	EDELMAN MANAGEMENT, LLC
31	LEGION - TRUSTEES OF THE AMER. LEGION HOWARD THOMAS POST #315
32	LEGION - TRUSTEES OF THE AMER. LEGION HOWARD THOMAS POST #315

Index No.	Owner
33	CREECH, DAVID C
42	SEBASTIAN, JAMES B
43	HELMS, JAMES E JR & NUBA JOANN
44	ROBINSON, CLARENCE E & SANDRA K
45	BARTLOW, ALAN D
46	ABBOTT, SHIRLEY E
47	THOMPSON, TODD & JUDITH E
48	REDMYER, RUSSELL

Index No.	Owner
49	BALTHIS, JAMES R & JANICE A
50	EAGLE LAND DEVELOPMENT, LLC
51	PARKS, R. DANIEL
52	ESTATE OF BERTSCH, PAUL J
53	P & M HOLDINGS, LLC
54	STERLING, WILLIAM & BARBARA
55	TURPIN, JASON
56	ALLEN, JOYCE

Index No.	Owner
57	BALLENGER, DONALD R SR
58	JOHNSON, JIMMIE H & LINDA L
59	DICKINSON REAL ESTATE III, LLC
60	KOONS, AMY L
61	HAZELBAKER, DOUGLAS C JR
62	GARRETT, CHARLES B JR & JOANN
63	WILSON, BRYAN SCOTT & MELISSA JANE
64	RAMSEY, GERALD A

Index No.	Owner
65	KIRKMAN, WILLIAM & GARY CARPENTER JTWROS
73	PARKS, DANIEL
74	MEDLIN, STEPHEN & MALINDA A
75	JENKINS, TERRY
76	JONES, STEVE JR & DORIS J
77	BAILEY, FLOYD L
78	RICHMOND TJ-1 LLC
79	DISCOUNT HOME IMPROVEMENT LLC

Index No.	Owner
80	KIDD, JOHNNY & VICTOR KIDD JTWROS
81	K T PROPERTY GROUP LLC
82	VHB PROPERTIES INC
83	PATTERSON, ETHEL M
84	PREMIER INVESTMENT GROUP
85	CABALLERO, BRENITA L
86	T-SQUARE PROPERTIES, LLC
87	THURSTON, FELICIA

Index No.	Owner
88	HALL, PATSY S & BERLON SPARKS JTWRS
89	JOHNSON, FELICIA
90	JOHNSON, JAMES W & FELICIA L
91	WHITE, DEREK E & DONNA M
92	BELL, MICHAEL R & BERNADINE BELL J/T/W/R/S
93	ZURWELL, JOSEPH LEE & SUSAN LEE
94	K T PROPERTY GROUP LLC
95	CORDELL, WILLIAM E

Index No.	Owner
96	STOLLE, EARL E & ANNA L
97	ROBERSON, SAM A SR & CARROLL ANNE
114	MC MILLER, JUNE E & ALICE L DELONEY JT/T/W/R/S/NT/T/C
115	ANDERSON, RICHARD L & KATHLEEN M
116	DAMRELL, DEBORAH K
117	DONATHON, NORMA
118	MELTON, ADAM
119	J T B HOLDINGS LTD

Index No.	Owner
120	BRIGGS-DAVIS, JEANNE E
121	POPE, LEE C
122	RAMSEY, DONALD E & LEONA M
123	JACKSON, BILL NEAL & SHIRLEY JEAN L/E ETAL
124	UNITED COMMUNITIES NATIONAL BANK
125	GOSS, DONALD L & TAMI SUE
126	LEE, RICHARD
127	GARBER, KENT E & ELSIE J. TRUSTEES

Index No.	Owner
128	MILLER, BARBARA K
129	SYLVIA, LONNIE J & MARGARET P
130	DUGGAN, KIMBERLY K
131	CHENAULT, CHARLENE ELIZABETH
132	SHELTON, BOBBY JOE
133	ISAACS, SHERRY
134	THOMAS, DANIEL D JR & DEBORAH K
135	COLE, JEFFRY & VICKI

Index No.	Owner
21	STATE OF INDIANA
22	BAKER, KENNETH E & EDITH M
23	MALICOAT, MARGARET JO
27	BIAS, WENDELL J. TRUSTEE
28	JOHN E. & WANDA J. MAITLEN
29	HOUSING AUTHORITY OF THE CITY OF RICHMOND
34	VAUGHN, HORACE EUGENE & DORIS A
36	VAUGHN, GARY E
37	MELLING, JOYCE ANN, TRUSTEE
38	MELLING ELECTRIC INC
39	CIRCLE D CORPPORATION
40	SCHMIDT, D CONSTRUCTION LLC

Index No.	Owner
41	R I CS3 LLC
66	OWENS, M J PROPERTIES LLC
67	BREEDEN, DAVID T
68	KRUTEL, MARY FRANCES LF EST W/ REM TO PATRICK A RISK & ET AL
69	HARKLEROAD, TERRY K
70	LABORERS LOCAL UNION 1047 BUILDERS CORP
71	MC CLURE, BRIAN & RHONDA
72	J T B HOLDINGS LTD
98	COATES, ORA SUE
99	MUSICK, JOSHUA A & SARAH B SCHWAB JTWRSNTC
100	TRUSTEE OF THE PAUL W LINGLE REVOCABLE TRUST

Index No.	Owner
101	C & D ENTERPRISES OF RICHMOND, INC
102	MEIER, ADOLF T & SUZANNE A
103	LANTER, RODNEY W & PENNY
104	PREMIER INVESTMENT GROUP, INC
105	MINOR, WILLIAM S JR & ANGELA F
106	WILKS, BENJAMIN L & RUANNE
107	WEST END BANK
108	KIDD REAL ESTATE TRUST
109	COOK, TRACI % HABITAT FOR HUMANITY
110	HILL, BLONDELL, L/E REM TO ROCHELLE TINSLEY % R TINSLEY
111	BLEDSOE, ANTHONY A & JOHN D BLEDSOE, J/T/W/R/S

Index No.	Owner
112	MALICOAT, MARGARET JO
113	GURIDY, MARIA
136	AUSTIN, BENJAMIN III & DORIS JEAN
137	BALLENGER, DONALD R SR
138	WERNER, HARRY & PATSY
139	ROOSA, CHRISTOPHER J
140	LANGLEY, ADAM J
141	BENNETT, GORDON
142	KARANOVICH, WAYNE T & PAMELA J
143	RODRIQUEZ, BENJAMIN II & CHRISTINA D

Index No.	Owner
144	CHIBISOV, ANTON & NILA
145	KLOBEDANZ, GERHARD
146	CAMERON, MARK J & LORRIE L
147	ALLEN, CRYSTAL D & SYLVIA SHOULDERS
148	ROBISON, LUCY M
149	BARNHIZER, MARK K & KATHLEEN L
150	BELL, JEFFERY A & LESLIE A
151	TILLERY, JAMES ALLEN
152	CARTER, TONYA D
153	BARNHIZER, MARK K & KATHLEEN L

Index No.	Owner
154	HELTON, RICHARD A & LINDA E

Not for Construction

Clark Dietz ENGINEERS

RECOMMENDED FOR APPROVAL _____ DESIGN ENGINEER DATE

DESIGNED: JAL DRAWN: MP
CHECKED: RBI CHECKED: JAL

INDIANA DEPARTMENT OF TRANSPORTATION

PLAT NO. 1
US 27

HORIZONTAL SCALE	BRIDGE FILE
1" = 100'	
VERTICAL SCALE	DESIGNATION
NONE	0100701
SURVEY BOOK	SHEETS
	7 of 278
CONTRACT	PROJECT
R-30397	0100701

12:07:40 PM 8/26/2016 P:\0170190\Plans\Misc\PLAT1_03.dgn

SEC. 5, T13N, R1W
WAYNE TWP.
WAYNE CO.

SCALE: 1" = 100'

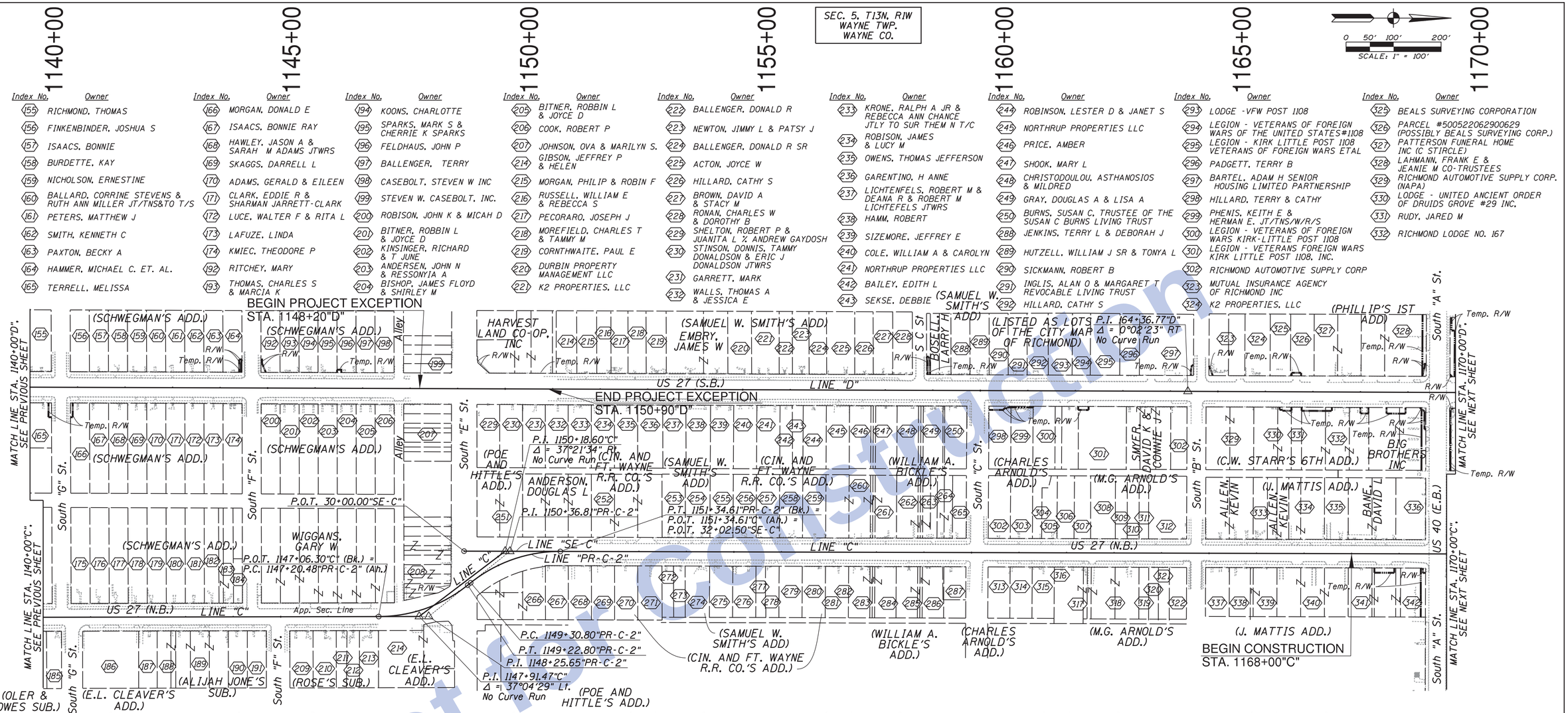

Index No.	Owner
155	RICHMOND, THOMAS
156	FINKENBINDER, JOSHUA S
157	ISAACS, BONNIE
158	BURDETTE, KAY
159	NICHOLSON, ERNESTINE
160	BALLARD, CORRINE STEVENS & RUTH ANN MILLER JT/TNS&TO T/S
161	PETERS, MATTHEW J
162	SMITH, KENNETH C
163	PAXTON, BECKY A
164	HAMMER, MICHAEL C. ET. AL.
165	TERRELL, MELISSA

Index No.	Owner
166	MORGAN, DONALD E
167	ISAACS, BONNIE RAY
168	HAWLEY, JASON A & SARAH M ADAMS JTWRS
169	SKAGGS, DARRELL L
170	ADAMS, GERALD & EILEEN
171	CLARK, EDDIE R & SHARMAN JARRETT-CLARK
172	LUCE, WALTER F & RITA L
173	LAFUZE, LINDA
174	KMIEC, THEODORE P
192	RITCHEY, MARY
193	THOMAS, CHARLES S & MARCIA K

Index No.	Owner
194	KOONS, CHARLOTTE
195	SPARKS, MARK S & CHERRIE K SPARKS
196	FELDHAUS, JOHN P
197	BALLENGER, TERRY
198	CASEBOLT, STEVEN W INC
199	STEVEN W. CASEBOLT, INC.
200	ROBISON, JOHN K & MICAH D
201	BITNER, ROBBIN L & JOYCE D
202	KINSINGER, RICHARD & T JUNE
203	ANDERSEN, JOHN N & RESSONYIA A
204	BISHOP, JAMES FLOYD & SHIRLEY M

Index No.	Owner
205	BITNER, ROBBIN L & JOYCE D
206	COOK, ROBERT P
207	JOHNSON, OVA & MARILYN S.
214	GIBSON, JEFFREY P & HELEN
215	MORGAN, PHILIP & ROBIN F
216	RUSSELL, WILLIAM E & REBECCA S
217	PECORARO, JOSEPH J
218	MOREFIELD, CHARLES T & TAMMY M
219	CORNTHWAITE, PAUL E
220	DURBIN PROPERTY MANAGEMENT LLC
221	K2 PROPERTIES, LLC

Index No.	Owner
222	BALLENGER, DONALD R
223	NEWTON, JIMMY L & PATSY J
224	BALLENGER, DONALD R SR
225	ACTON, JOYCE W
226	HILLARD, CATHY S
227	BROWN, DAVID A & STACY M
228	RONAN, CHARLES W & DOROTHY B
229	SHELTON, ROBERT P & JUANITA L % ANDREW GAYDOSH
230	STINSON, DONNIS, TAMMY DONALDSON & ERIC J DONALDSON JTWRS
231	GARRETT, MARK
232	WALLS, THOMAS A & JESSICA E

Index No.	Owner
233	KRONE, RALPH A JR & REBECCA ANN CHANCE JTLY TO SUR THEM N T/C
234	ROBISON, JAMES & LUCY M
235	OWENS, THOMAS JEFFERSON
236	GARENTINO, H ANNE
237	LICHTENFELS, ROBERT M & DEANA R & ROBERT M LICHTEFELS JTWRS
238	HAMM, ROBERT
239	SIZEMORE, JEFFREY E
240	COLE, WILLIAM A & CAROLYN
241	NORTHRUP PROPERTIES LLC
242	BAILEY, EDITH L
243	SEKSE, DEBBIE

Index No.	Owner
244	ROBINSON, LESTER D & JANET S
245	NORTHRUP PROPERTIES LLC
246	PRICE, AMBER
247	SHOOK, MARY L
248	CHRISTODOULOU, ASTHANOSIOS & MILDRED
249	GRAY, DOUGLAS A & LISA A
250	BURNS, SUSAN C, TRUSTEE OF THE SUSAN C BURNS LIVING TRUST
288	JENKINS, TERRY L & DEBORAH J
289	HUTZELL, WILLIAM J SR & TONYA L
290	SICKMANN, ROBERT B
291	INGLIS, ALAN O & MARGARET T REVOCABLE LIVING TRUST
292	HILLARD, CATHY S

Index No.	Owner
293	LODGE -VFW POST 1108
294	LEGION - VETERANS OF FOREIGN WARS OF THE UNITED STATES#1108
295	LEGION - KIRK LITTLE POST 1108 VETERANS OF FOREIGN WARS ETAL
296	PADGETT, TERRY B
297	BARTEL, ADAM H SENIOR HOUSING LIMITED PARTNERSHIP
298	HILLARD, TERRY & CATHY
299	PHENIS, KEITH E & HERMAN E. JT/TNS/W/R/S
300	LEGION - VETERANS OF FOREIGN WARS KIRK-LITTLE POST 1108
301	LEGION - VETERANS FOREIGN WARS KIRK LITTLE POST 1108, INC.
302	RICHMOND AUTOMOTIVE SUPPLY CORP
323	MUTUAL INSURANCE AGENCY OF RICHMOND INC
324	K2 PROPERTIES, LLC

Index No.	Owner
325	BEALS SURVEYING CORPORATION
326	PARCEL #500522062900629 (POSSIBLY BEALS SURVEYING CORP.)
327	PATTERSON FUNERAL HOME INC (C STIRCLE)
328	LAHMANN, FRANK E & JEANIE M CO-TRUSTEES
329	RICHMOND AUTOMOTIVE SUPPLY CORP. (NAPA)
330	LODGE - UNITED ANCIENT ORDER OF DRUIDS GROVE #29 INC.
331	RUDY, JARED M
332	RICHMOND LODGE NO. 167

Index No.	Owner
175	SHELTON, BOBBY
176	US BANK NA TRUSTEE
177	VANLANDINGHAM, MICHAEL LEANARD & ROSEMARY MARIE
178	SHUTE, STEVEN D & SHIRLEY
179	HILEMAN, STANLEY W & STEPHANIE J RINEHART JT/T/W/R/S
180	WHITED, BRENT ALAN & CAROLE D
181	GOFFORD, EDNA BERNICE & RICHARD ALLEN GIFFORD JTWRS
182	SNOW, MARGARET
183	TUDOR, PATRICK L & AMY S
184	BRUNNER, LOUIS DUDLEY & LOUIS DUDLEY BRUNNER II J/T/W/R/S
185	SPICER, JERRY L J
186	FISERV ISS & CO TRUSTEE FBO MICHAEL WEPRIN IRA
187	DRYDEN, DONNA LEA
188	CHRISTIE, DELBERT GREGORY

Index No.	Owner
189	COX, LAWRENCE & SARAH TRUST
190	DYE, CARROLL F & RUTH E
191	COX, LAWRENCE & SARAH TRUST
208	OWENS, THOMAS
209	HALLORAN, BARRY T
210	FRAME, FRANK E & BETTY J
211	NICK, ROBERT L & VIRGINIA
212	TURNER, SAMUEL J & CONNIE SUE
213	ELSTRO, HOWARD J, MICHAEL & TIMOTHY J ELSTRO JTWRS
214	MILLER INVESTMENTS, LP
251	J.B. REALTY
252	FAMILY DOLLAR STORES OF INDIANA LP
253	COX, LAWRENCE & SARAH TRUST

Index No.	Owner
254	WELCH, NEAL & EVALENE
255	COX, LAWRENCE & SARAH
256	ANDERSON, RICHARD & KATHY
257	ALBERT, WILLIE R & HELEN A
258	MARCUM, HAROLD D
259	SMITH, RON D
260	DELLINGER, ALLEN R & BONITA L
261	CAMDEN, ADRIANNA S
262	PONDER, DONALD R & CATHLEEN J
263	WADE, FRANKIE A
264	SPARKS, HERMAN L & MARCIA J
265	MORGAN, PHILIP C. & ROBIN F.
266	DAGGY, JACK A & RUTH N
267	ATKINS, GUNTIS E & AMY J

Index No.	Owner
268	JACKSON, BILL NEAL & SHIRLEY JEAN L/E ETAL
269	LEITNER, CLARENCE ALAN
270	BASSO, JOSEPH CARL JR
271	COATES, STEPHEN D
272	BOSWELL, BETTY JUNE
273	DAVIS, REBECCA R % REBECCA KING
274	ISOM, ANTHONY J
275	EMBRY, JAMES W
276	YORK, IVAN EUGENE
277	BALLENGER, DONALD SR
278	ALBERT, WILLIE R & HELEN A
279	ROSS, JAMES
280	MULLINS, PAULA L
281	DURBIN PROPERTY MANAGEMENT LLC

Index No.	Owner
282	STINSON, CURT A
283	MAYES, THURMAN WAYNE; VICKI J & LORAYNA EA 1/3 INT J/T/W/R/S
284	FRANKLIN, JANET
285	POWELL, JEREMY E & GENIE C
286	LOVE, DOUGLAS C & GARY LOVE JTWRS
287	PREMIER INVESTMENT GROUP INC
302	ISAACS, BONNIE RAY & VIOLET
303	PHENIS, KEITH EUGENE & THERESA ANDERSON JTWRS
304	K & R HOOSIER INVESTMENTS LLC
305	CARLIN, CECIL M & BARBARA
306	LEGION - KIRK-LITTLE POST 1108 VFW INC
307	LODGE - KIRK LITTLE VFW #1108
308	LEGION - KIRK LITTLE POST 1108 VETERANS OF FOREIGN WARS ETAL
309	LEGION - VETERANS OF FOREIGN WARS KIRK-LITTLE POST 1108

Index No.	Owner
310	LEGION - VETERANS OF FOREIGN WARS KIRK-LITTLE POST 1108
311	LEGION - WHITEWATER VALLEY DETACHMENT MARINE CORPS LEAGUE
312	WHITEWATER VALLEY DETACHMENT MARINE CORP LEAGUE
313	CHILES, GERALDINE
314	BUCHHOLZ, CARL W
315	ANDERSON, RICHARD L & KATHLEEN M
316	AMYX, JUSTIN M
317	UNKNOWN
318	HENDERSON, LEONARD C II & GRACE L
319	WHITT, JERRY & CONNIE
320	GORDON, JAMES
321	GORDON, ZOAN CHRISTINE
322	KT PROPERTY GROUP LLC
333	RISCH, JOHN KEVIN & MELISSA TAYLOR JTWROS

Index No.	Owner
334	LODGE - RICHMOND LODGE NO 167 LOYAL ORDER OF MOOSE
335	BAVENDER, LINDA
336	THE ROBERT TYLER APARTMENTS, LLC
337	HELTON, BYNAM B & ROBIN
338	LYONS, MICHAEL E & THEODORE JT/TNS
339	UNITED WAY OF WHITEWATER VALLEY INC
340	CITY OF RICHMOND (PARCEL #500522080400529)
341	KEMPER, DONALD L & ETHEL SUE
342	COMPTON, DONALD LEON & JANET LOUISE % PATRICIA JAMES

SEC. 4, T13N, R1W
WAYNE TWP.
WAYNE CO.

Not for Construction

Clark Dietz
ENGINEERS

RECOMMENDED FOR APPROVAL _____ DESIGN ENGINEER DATE

DESIGNED: JAL DRAWN: MP
CHECKED: RBI CHECKED: JAL

INDIANA
DEPARTMENT OF TRANSPORTATION

PLAT NO. 1
US 27

HORIZONTAL SCALE	BRIDGE FILE
1" = 100'	
VERTICAL SCALE	DESIGNATION
NONE	0100701
SURVEY BOOK	SHEETS
	8 of 278
CONTRACT	PROJECT
R-30397	0100701

12:07:42 PM 8/26/2016 P:\0170190\Plans\Misc\PLAT1_04.dgn

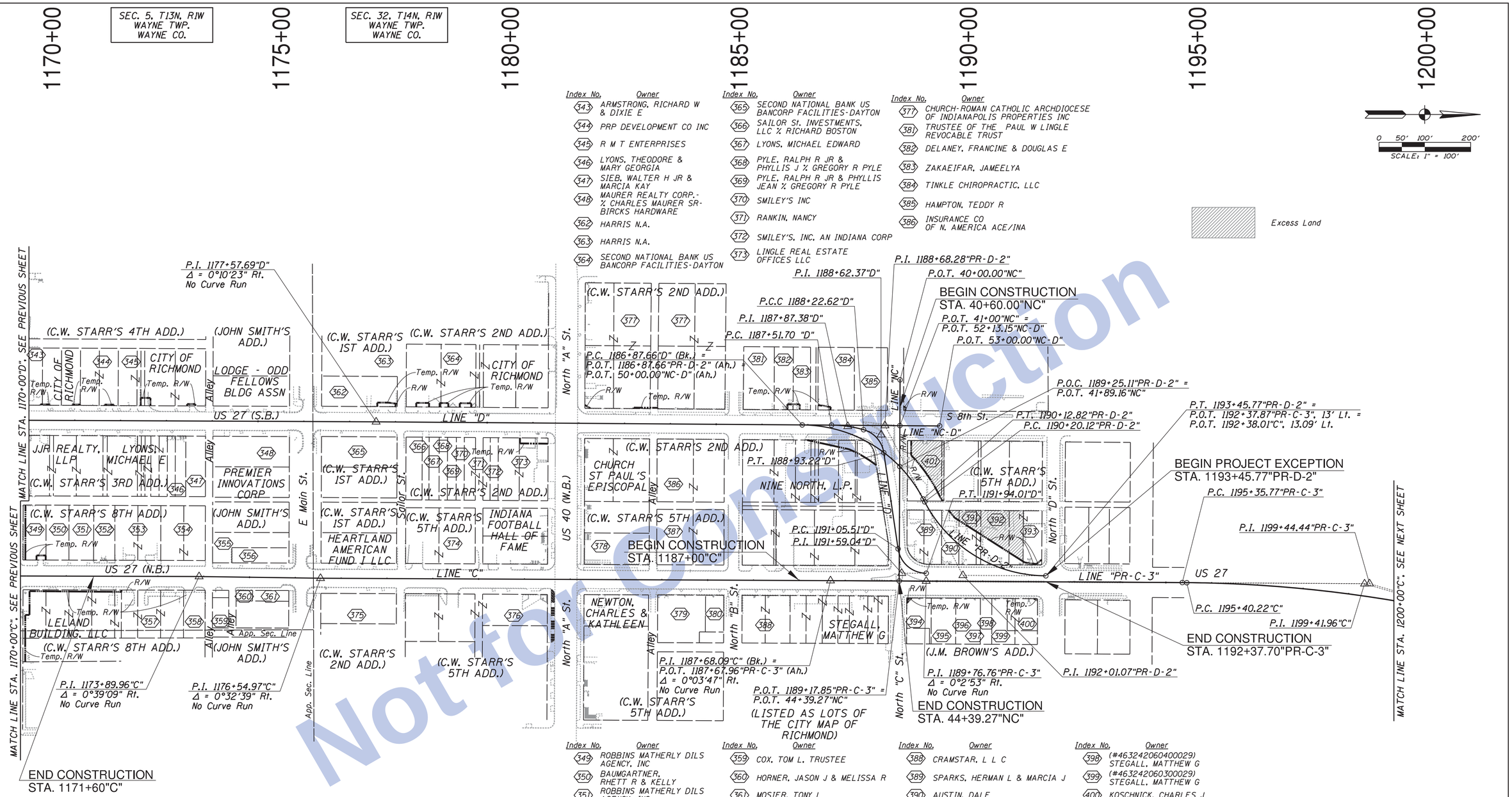

Index No.	Owner
343	ARMSTRONG, RICHARD W & DIXIE E
344	PRP DEVELOPMENT CO INC
345	R M T ENTERPRISES
346	LYONS, THEODORE & MARY GEORGIA
347	SIEB, WALTER H JR & MARCIA KAY
348	MAURER REALTY CORP.- % CHARLES MAURER SR- BIRCKS HARDWARE
362	HARRIS N.A.
363	HARRIS N.A.
364	SECOND NATIONAL BANK US BANCORP FACILITIES-DAYTON

Index No.	Owner
365	SECOND NATIONAL BANK US BANCORP FACILITIES-DAYTON
366	SAILOR ST. INVESTMENTS, LLC % RICHARD BOSTON
367	LYONS, MICHAEL EDWARD
368	PYLE, RALPH R JR & PHYLLIS J % GREGORY R PYLE
369	PYLE, RALPH R JR & PHYLLIS JEAN % GREGORY R PYLE
370	SMILEY'S INC
371	RANKIN, NANCY
372	SMILEY'S, INC, AN INDIANA CORP
373	LINGLE REAL ESTATE OFFICES LLC

Index No.	Owner
377	CHURCH-ROMAN CATHOLIC ARCHDIOCESE OF INDIANAPOLIS PROPERTIES INC
381	TRUSTEE OF THE PAUL W LINGLE REVOCABLE TRUST
382	DELANEY, FRANCINE & DOUGLAS E
383	ZAKAEIFAR, JAMEELYA
384	TINKLE CHIROPRACTIC, LLC
385	HAMPTON, TEDDY R
386	INSURANCE CO OF N. AMERICA ACE/INA

Index No.	Owner
349	ROBBINS MATHERLY DILS AGENCY, INC
350	BAUMGARTNER, RHETT R & KELLY
351	ROBBINS MATHERLY DILS AGENCY, INC
352	COLEMAN, CHARLES F JR
353	CITY OF RICHMOND PARCEL #500522022000529
354	BLUM, E MICHAEL
355	PATTON, GREG & ROBYN
356	HIMELICK, RALPH W & VIVIAN I
357	RICHMOND, INDIANA (PARCEL #500522010801529)
358	BLUM, KAREN E

Index No.	Owner
359	COX, TOM L, TRUSTEE
360	HORNER, JASON J & MELISSA R
361	MOSIER, TONY L
374	FIRST FEDERAL SAVINGS & LOAN ASSOC % FIRST BANK - L TURNER
375	REID MEMORIAL HOSPITAL INC HOPPE JEWELERS & GIFTS
376	RICHMOND MUTUAL BANCORPORATION, INC
378	CHURCH - OASIS MINISTRY CENTER INC % CAROL EVERSOLE
379	STEWART, PHILLIP L & JUDITH E PJ'S COLLEGE OF COSMETOLOGY
380	STEWART, PHILLIP L & JUDITH E
387	INSURANCE CO OF N. AMERICA ACE/INA

Index No.	Owner
388	CRAMSTAR, L L C
389	SPARKS, HERMAN L & MARCIA J
390	AUSTIN, DALE
391	SUTTER, RONALD R & GRACE E
392	ALFRED & CHRISTINE PARKS
393	HOWELL, ALBERT T REVOCABLE LIVING TRUST
394	AMS INVESTMENTS NORTH, LLC
395	EARLYWINE, ERIC
396	STEGALL, MATTHEW G
397	(#463242060500029) STEGALL, MATTHEW G

Index No.	Owner
398	(#463242060400029) STEGALL, MATTHEW G
399	(#463242060300029) STEGALL, MATTHEW G
400	KOSCHNICK, CHARLES J
401	ARNETT INVESTNENTS, LLC

Not for Construction

Clark Dietz
ENGINEERS

RECOMMENDED FOR APPROVAL _____ DESIGN ENGINEER DATE

DESIGNED: JAL DRAWN: MP
CHECKED: RBI CHECKED: JAL

INDIANA
DEPARTMENT OF TRANSPORTATION

PLAT NO. 1
US 27

HORIZONTAL SCALE	BRIDGE FILE
1" = 100'	
VERTICAL SCALE	DESIGNATION
NONE	0100701
SURVEY BOOK	SHEETS
	9 of 278
CONTRACT	PROJECT
R-30397	0100701

12:07:44 PM 8/26/2016 P:\0170190\Plans\Misc\PLAT1_05.dgn

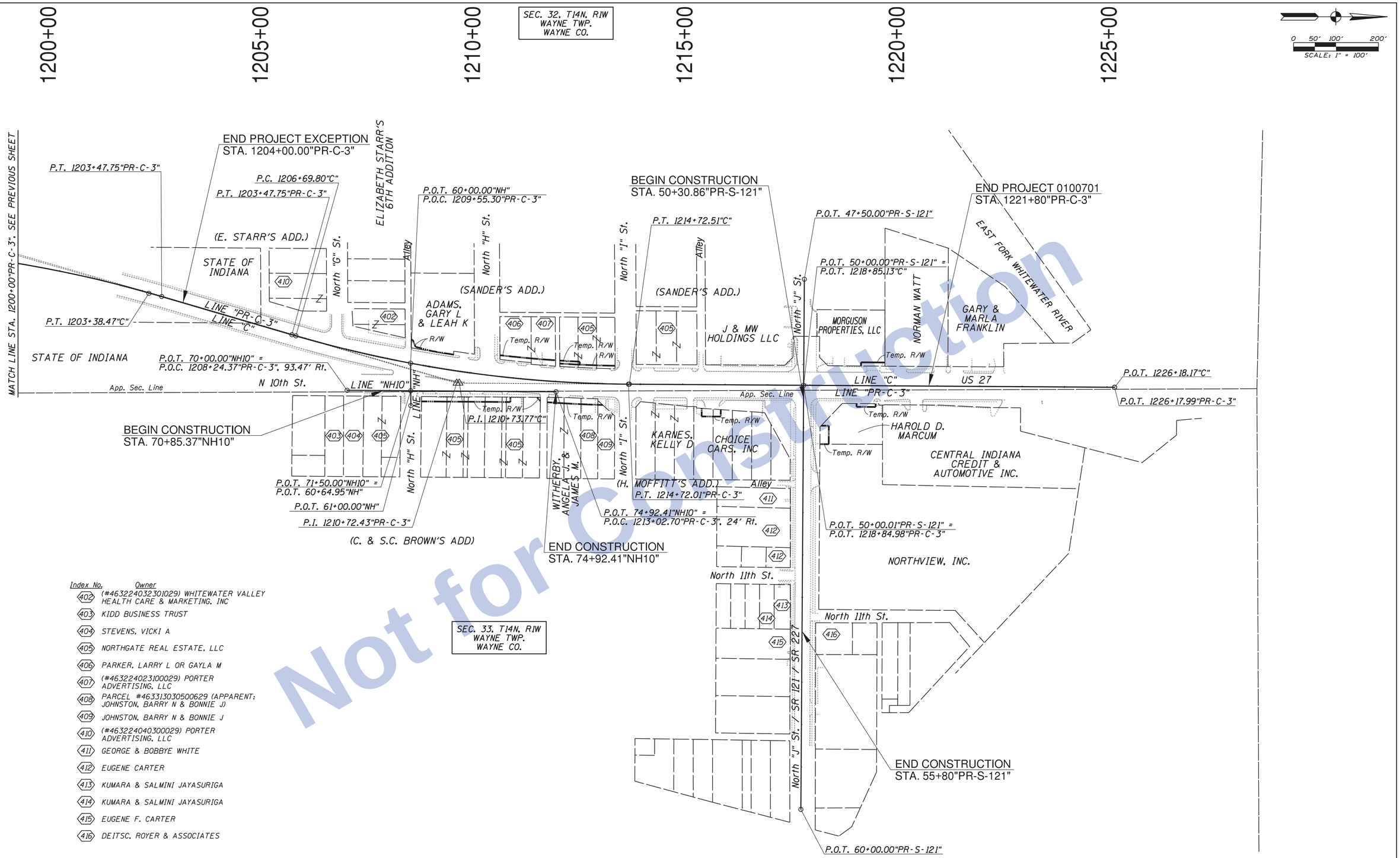

Index No.	Owner
402	(#463224032301029) WHITEWATER VALLEY HEALTH CARE & MARKETING, INC
403	KIDD BUSINESS TRUST
404	STEVENS, VICKI A
405	NORTHGATE REAL ESTATE, LLC
406	PARKER, LARRY L OR GAYLA M
407	(#463224023100029) PORTER ADVERTISING, LLC
408	PARCEL #463313030500629 (APPARENT: JOHNSTON, BARRY N & BONNIE J)
409	JOHNSTON, BARRY N & BONNIE J
410	(#463224040300029) PORTER ADVERTISING, LLC
411	GEORGE & BOBBYE WHITE
412	EUGENE CARTER
413	KUMARA & SALMINI JAYASURIGA
414	KUMARA & SALMINI JAYASURIGA
415	EUGENE F. CARTER
416	DEITSC, ROYER & ASSOCIATES

Not for Construction

Clark Dietz
ENGINEERS

RECOMMENDED FOR APPROVAL _____ DESIGN ENGINEER DATE

DESIGNED: JAL DRAWN: MP
CHECKED: RBI CHECKED: JAL

INDIANA
DEPARTMENT OF TRANSPORTATION

PLAT NO. 1
US 27

HORIZONTAL SCALE	BRIDGE FILE
1" = 100'	
VERTICAL SCALE	DESIGNATION
NONE	0100701
SURVEY BOOK	SHEETS
	10 of 278
CONTRACT	PROJECT
R-30397	0100701

12:07:46 PM 8/26/2016 P:\0170190\Plans\Misc\PLAT1_06.dgn

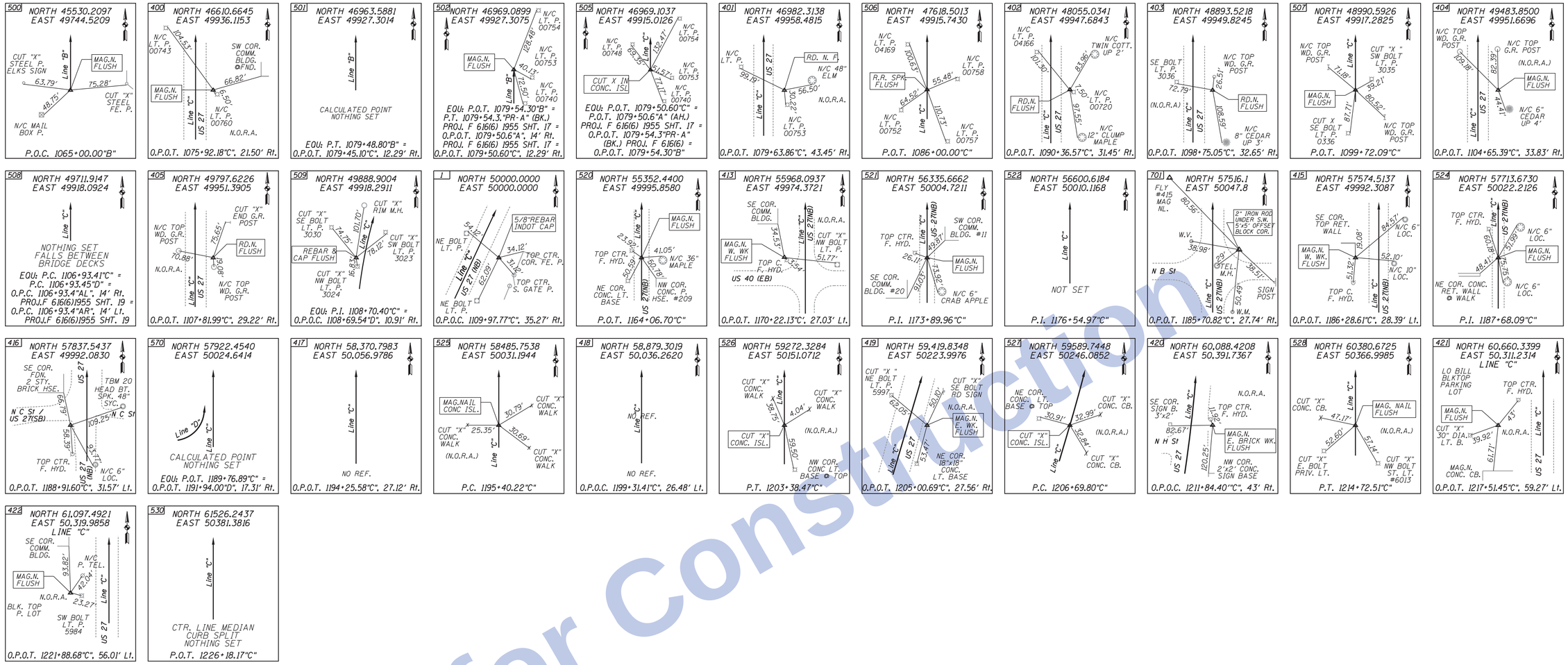

Not for Construction

12:07:48 PM 8/26/2016 P:\0170190\Plans\Misc\REF_PTS_C_01.dgn

Clark Dietz
ENGINEERS

RECOMMENDED FOR APPROVAL _____ DESIGN ENGINEER DATE

DESIGNED: JAL DRAWN: MP
CHECKED: RBI CHECKED: JAL

INDIANA
DEPARTMENT OF TRANSPORTATION

REFERENCE POINTS
US 27

HORIZONTAL SCALE	BRIDGE FILE
NONE	
VERTICAL SCALE	DESIGNATION
NONE	0100701
SURVEY BOOK	SHEETS
	11 of 278
CONTRACT	PROJECT
R-30397	0100701

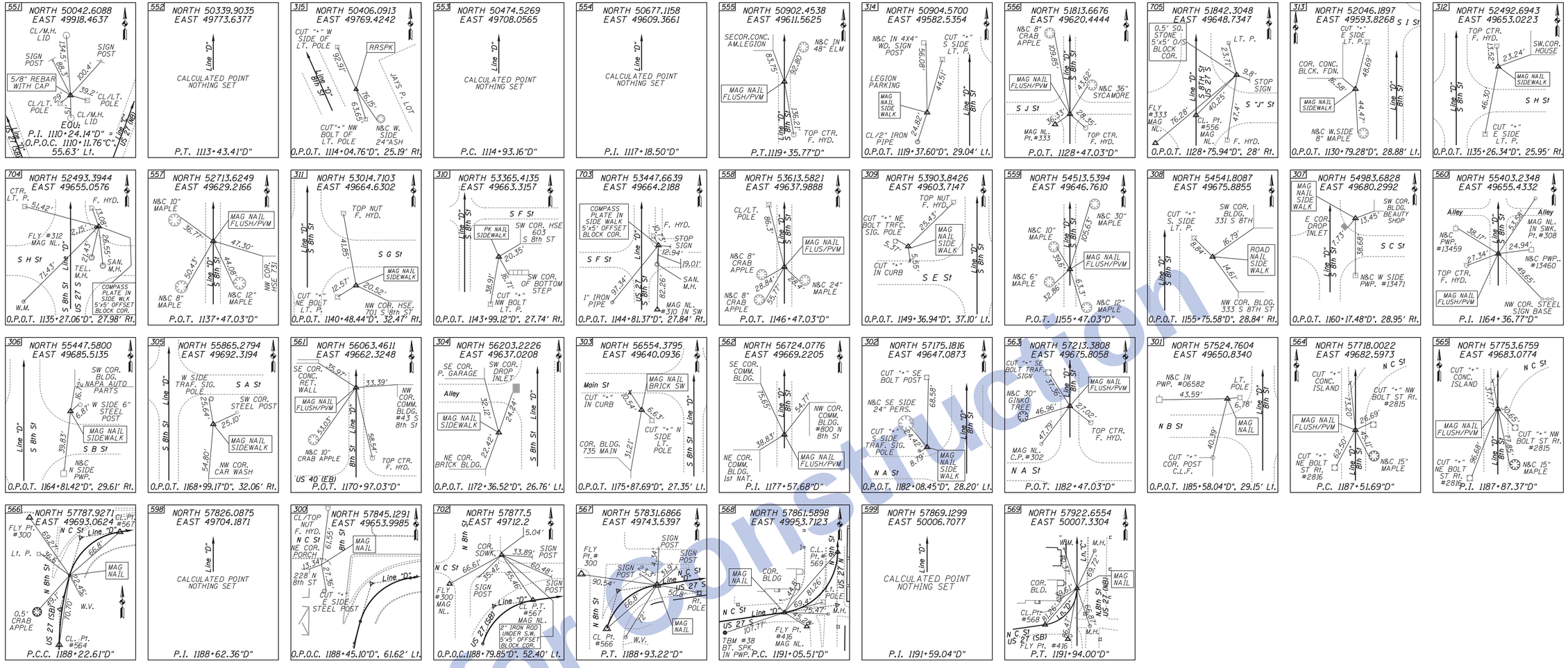

Not for Construction

Clark Dietz ENGINEERS

RECOMMENDED FOR APPROVAL _____ DESIGN ENGINEER DATE

DESIGNED: JAL DRAWN: MP
CHECKED: RBI CHECKED: JAL

INDIANA
DEPARTMENT OF TRANSPORTATION

REFERENCE POINTS
US 27

HORIZONTAL SCALE	BRIDGE FILE
NONE	
VERTICAL SCALE	DESIGNATION
NONE	0100701
SURVEY BOOK	SHEETS
	12 of 278
CONTRACT	PROJECT
R-30397	0100701

12:07:50 PM 8/26/2016 P:\0170190\Plans\Misc\REF_PTS_D_02.dgn

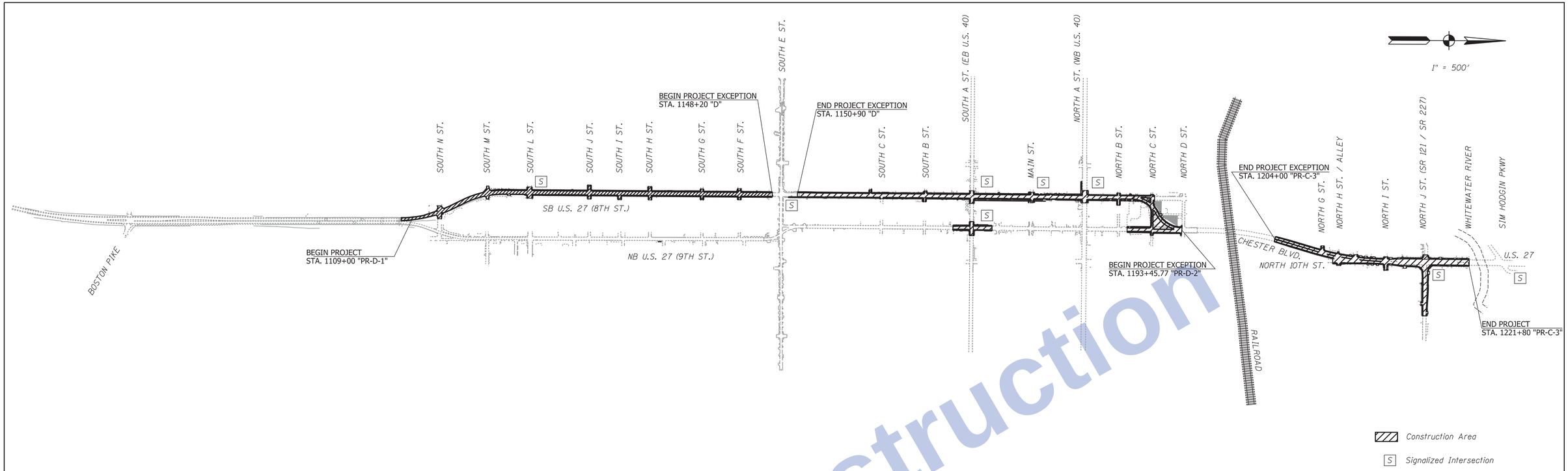

Not for Construction

MOT SUMMARY OF QUANTITIES

		IA	IB	IC	ID	IE	II	IIIA	IIIB	IV	V Undistributed	Pedestrian MOT	Quantity	UNIT
402-10086	HMA FOR TEMPORARY PAVEMENT, C (16" THICKNESS)	183	0	0	0	0	0	0	0	0	0	0	183	TON
801-01093	TEMPORARY WORKSITE SPEED LIMIT SIGN ASSEMBLY	6	7	7	7	10	28	19	2	30	8	0	124	EA
801-02595	CONTROLLER, RESET TIMING	0	0	0	0	2	6	8	1	16	0	0	33	EA
801-03290	CONSTRUCTION SIGN, C	3	3	3	3	4	7	5	1	9	8	0	9	EA
801-04308	ROAD CLOSURE SIGN ASSEMBLY	0	2	4	4	12	42	35	0	30	0	0	42	EA
801-04746	ENERGY ABSORBING TERMINAL, CZ, TL-Z	0	0	0	0	8	8	0	0	0	0	0	8	EA
	TEMP. PAVEMENT MARKING, REMOVABLE, 4 IN (WHITE)	534	900	0	214	6,670	13,050	16,469	553	7,457	0	0	-	LFT
	TEMP. PAVEMENT MARKING, REMOVABLE, 4 IN (YELLOW)	1,408	1,280	1,608	1,421	9,245	15,980	10,628	1,106	18,843	0	0	-	LFT
801-06207	Total	1,942	2,180	1,608	1,635	15,915	29,030	27,097	1,659	26,300	0	0	107,366	LFT
801-06211	TEMP. PAVEMENT MESSAGE MARKING, REMOVABLE, LANE INDICATION ARROW	0	0	0	0	3	4	3	0	1	0	0	11	EA
801-06218	TEMP. TRANSVERSE PAVEMENT MARKING, REMOVABLE, 24 IN	0	0	0	0	140	190	125	12	392	0	0	859	LFT
801-06625	DETOUR ROUTE MARKER ASSEMBLY	0	5	5	5	21	5	5	0	0	0	0	21	EA
801-06640	CONSTRUCTION SIGN, A	17	19	22	21	55	144	120	3	148	96	0	148	EA
801-06645	CONSTRUCTION SIGN, B	0	0	0	0	8	7	8	0	4	4	216	216	EA
801-06710	FLASHING ARROW SIGN	30	60	7	7	240	1,080	705	30	420	60	0	2,639	DAY
801-06775	MAINTAINING TRAFFIC	-	-	-	-	-	-	-	-	-	-	-	1	LS
801-07118	BARRICADE, III-A	0	0	0	0	0	0	0	0	0	0	1,728	1,728	LFT
801-07119	BARRICADE, III-B	60	60	72	72	432	1,344	1,188	12	924	0	0	1,344	LFT
801-09401	TEMP. TRAFFIC BARRIER, TYPE 2	0	0	0	0	2,140	1,470	200	0	0	0	0	2,140	LFT
801-94295	SIGNAL HEAD, RELOCATE	0	0	0	0	6	12	11	1	12	0	0	42	EA
808-06716	LINE, REMOVE	980	90	270	160	5,970	7,350	3,705	0	1,285	0	0	19,810	LFT

Maximum Drum Spacing

Construction Zone Design Speed (mph)	Taper	Tangent
20	20	40
30	30	60
35	35	70
40	40	80
45	45	90
50	50	100
55	55	110
60	60	120

Note: For speeds 20 mph and lower, taper spacing should not be less than 20 ft.

General Notes:
(Applies to all MOT Phases)

1) A wide load restriction will be required for the entire duration of the work on US 27.
2) There is no official detour for this project. Traffic shall be maintained in the project area as shown in the following MOT details.
3) Access to Driveways & Approaches Shall be provided at all times unless otherwise directed.
4) During construction, existing signs shall remain in place, or relocated to an appropriate location as near as possible to their original locations, unless otherwise directed.
5) Typical sections are displayed on the MOT details. Desirable minimum pavement widths are 11-ft travel lanes & 1-ft shoulders. Absolute minimum pavement widths are 10-ft travel lanes & 1-ft shoulders.
6) An undistributed quantity for 'HMA Wedge & Level, Type B' is included on the Approach Table for maintaining access to side streets and driveways during construction.

MOT Sequence:

Phase IA
Remove existing center curb and center islands along NB U.S. 27 from North C St. to just north of North D St.

Phase IB
Shift NB U.S. 27 traffic to one lane between North B St. & North D St. as shown.
Construct pavement and storm sewer along NB U.S. 27 from North B St. to North D St. as shown.

Phase IC & ID
Shift traffic as shown to construct proposed drainage items along NB US 27.

Phase IE
Construct re-alignment of SB U.S. 27 (8th St.) from North C St. to North D St.
Begin construction of NB U.S. 27 lanes (Chester Blvd.) from just south of North G St. to the bridge over Whitewater River, just north of SR 121.
Traffic reduced to one lane in each direction from North C St. to Whitewater River bridge.
Grading, storm sewer, pavement, curb & gutter, and sidewalk constructed during this phase.

Phase II
Shift traffic on SB U.S. 27 (8th st.) to one lane as shown.
Begin construction of SB U.S. 27 lanes from South N St. to North D St.
Continue construction of SB U.S. 27 lanes (Chester Blvd) from just south of North G St. to the north end of the project, appr. 500' north of SR 121.
Continue construction on NB U.S. 27 at the intersections with South A St., North C St., & North D St.
Grading, storm sewer, pavement, curb & gutter, and sidewalk constructed during this phase.

Phase IIIA
Shift traffic as shown on SB U.S. 27 and construct west half of SB lanes from south of South N St. to North D St., other than the project exception area at South E St.
Finish construction of the NB U.S. 27 lanes between North B St. & North D St. as shown.
Continue construction on U.S. 27 from just south of North G St. to project end at 500' north of SR 121, just south of the Whitewater River.
Proceed with roadwork along SR 121 as shown.
Continue intersection work along SB U.S. 27 at North A St. as shown.
Construction during this phase includes grading, storm sewer, pavement, curb & gutter, sidewalk, and drive construction.

Phase IIIB
Continue construction from Phase III on U.S. 27.
Shift traffic on SR 121 to NB lanes as shown in detail, and continue with construction on south half of SR 121.
Construction during this phase includes grading, storm sewer, pavement, curb & gutter, sidewalk, and drive construction.

Phase IV
Shift traffic as shown on SB U.S. 27 and construct the east half of SB U.S. 27 lanes from south of South N St. to North D St., other than the project exception area at South E St.
Construct east lane of NB U.S. 27 at South A St. as shown.
Construction during this phase includes grading, storm sewer, pavement, curb & gutter, sidewalk, and drive construction.

Phase V
Finalize all grading, resurfacing, casting grades, pavement markings, traffic items, and cleanup.
Complete all work and shift traffic back to regular patterns.
A separate MOT detail is not shown for this phase.

Clark Dietz
ENGINEERS

RECOMMENDED FOR APPROVAL _____ DESIGN ENGINEER DATE

DESIGNED: RBI DRAWN: MP
CHECKED: JAL CHECKED: RBI

INDIANA
DEPARTMENT OF TRANSPORTATION

MAINTENANCE OF TRAFFIC
SUMMARY

HORIZONTAL SCALE	BRIDGE FILE
N/A	
VERTICAL SCALE	DESIGNATION
N/A	0100701
SURVEY BOOK	SHEETS
	13 of 278
CONTRACT	PROJECT
R-30397	0100701

12:07:53 PM 8/26/2016 P:\0170190\Plans\Wet\Ofr\MOT_Summary.dgn

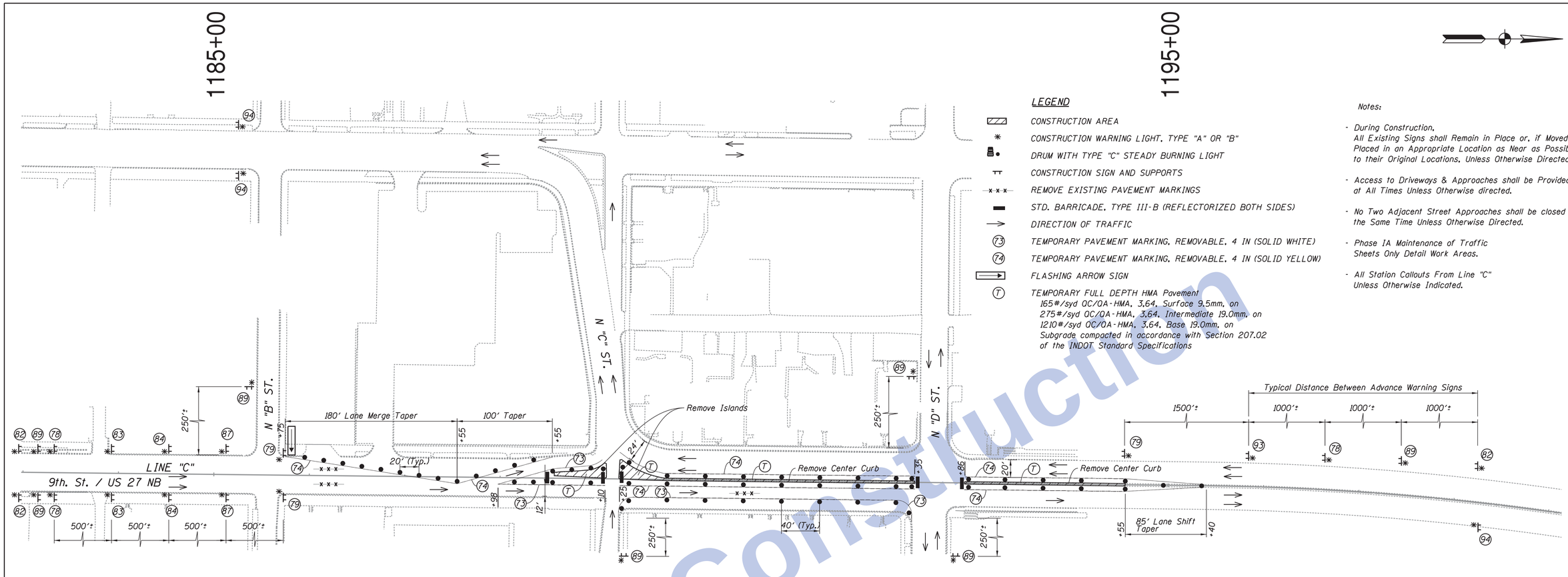

LEGEND

- CONSTRUCTION AREA
- CONSTRUCTION WARNING LIGHT, TYPE "A" OR "B"
- DRUM WITH TYPE "C" STEADY BURNING LIGHT
- CONSTRUCTION SIGN AND SUPPORTS
- REMOVE EXISTING PAVEMENT MARKINGS
- STD. BARRICADE, TYPE III-B (REFLECTORIZED BOTH SIDES)
- DIRECTION OF TRAFFIC
- (73) TEMPORARY PAVEMENT MARKING, REMOVABLE, 4 IN (SOLID WHITE)
- (74) TEMPORARY PAVEMENT MARKING, REMOVABLE, 4 IN (SOLID YELLOW)
- FLASHING ARROW SIGN
- (T) TEMPORARY FULL DEPTH HMA Pavement
  165#/syd QC/QA-HMA, 3.64, Surface 9.5mm, on
  275#/syd QC/QA-HMA, 3.64, Intermediate 19.0mm, on
  1210#/syd QC/QA-HMA, 3.64, Base 19.0mm, on
  Subgrade compacted in accordance with Section 207.02
  of the INDOT Standard Specifications

Notes:

- During Construction,
  All Existing Signs shall Remain in Place or, if Moved, Placed in an Appropriate Location as Near as Possible to their Original Locations, Unless Otherwise Directed.
- Access to Driveways & Approaches shall be Provided at All Times Unless Otherwise directed.
- No Two Adjacent Street Approaches shall be closed at the Same Time Unless Otherwise Directed.
- Phase IA Maintenance of Traffic Sheets Only Detail Work Areas.
- All Station Callouts From Line "C" Unless Otherwise Indicated.

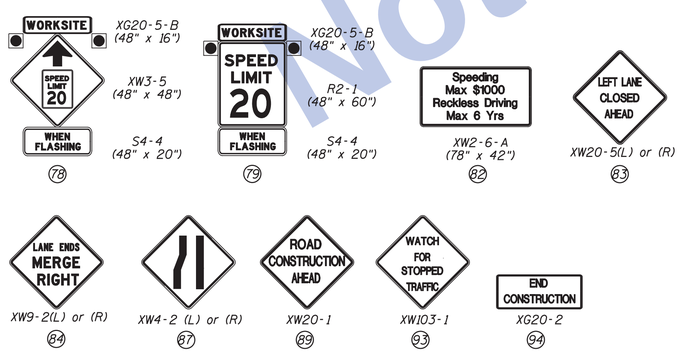

PAY ITEMS - PHASE IA	QUANTITY	
PAY ITEMS	TOTAL	UNIT
TEMPORARARY WORKSITE SPEED LIMIT SIGN ASSEMBLY	6	EA
CONSTRUCTION SIGN, C	3	EA
ROAD CLOSURE SIGN ASSEMBLY	0	EA
HMA FOR TEMPORARY PAVEMENT, C (16" THICKNESS)	183	TON
TEMP. PAVEMENT MARKING, REMOVABLE, 4 IN (YELLOW)	1,408	LFT
TEMP. PAVEMENT MARKING, REMOVABLE, 4 IN (WHITE)	534	LFT
CONSTRUCTION SIGN, A	17	EA
CONSTRUCTION SIGN, B	0	EA
FLASHING ARROW SIGN	30	DAY
BARRICADE III-B	60	LFT
LINE, REMOVE	980	LFT

SIGN IDENTIFICATION TABLE - PHASE IA		TYPE	QUANTITY
SIGN CODE	MESSAGE		SHEET 14
XG20-2	END CONSTRUCTION	A	3
XW3-4A	WATCH FOR STOPPED TRAFFIC	A	1
XW20-1	ROAD CONSTRUCTION AHEAD	A	7
XW20-5	(RIGHT) OR (LEFT) LANE CLOSED AHEAD	A	2
XW2-6-A	WORKSITE ADDED PENALTY SIGNS	C	3
XW4-2	LANE ENDS MERGE (RIGHT) OR (LEFT) [SYMBOL]	A	2
XW9-2	LANE ENDS MERGE (RIGHT) OR (LEFT)	A	2
Subtotal	Construction Sign, Type A	17	17
Subtotal	Construction Sign, Type B	0	
Subtotal	Construction Sign, Type C	3	3

Construction Zone Design Speed: 20 MPH

Not for Construction

Clark Dietz
ENGINEERS

RECOMMENDED FOR APPROVAL _____ DESIGN ENGINEER DATE

DESIGNED: JAL DRAWN: MP
CHECKED: RBI CHECKED: JAL

INDIANA
DEPARTMENT OF TRANSPORTATION

MAINTENANCE OF TRAFFIC PHASE IA
US 27

HORIZONTAL SCALE	BRIDGE FILE
1" = 50'	
VERTICAL SCALE	DESIGNATION
NONE	0100701
SURVEY BOOK	SHEETS
	14 of 278
CONTRACT	PROJECT
R-30397	0100701

12:07:56 PM 8/26/2016 P:\0170190\Plans\Wot01Ir1\WOT_US27_N_PH1A_01.dgn

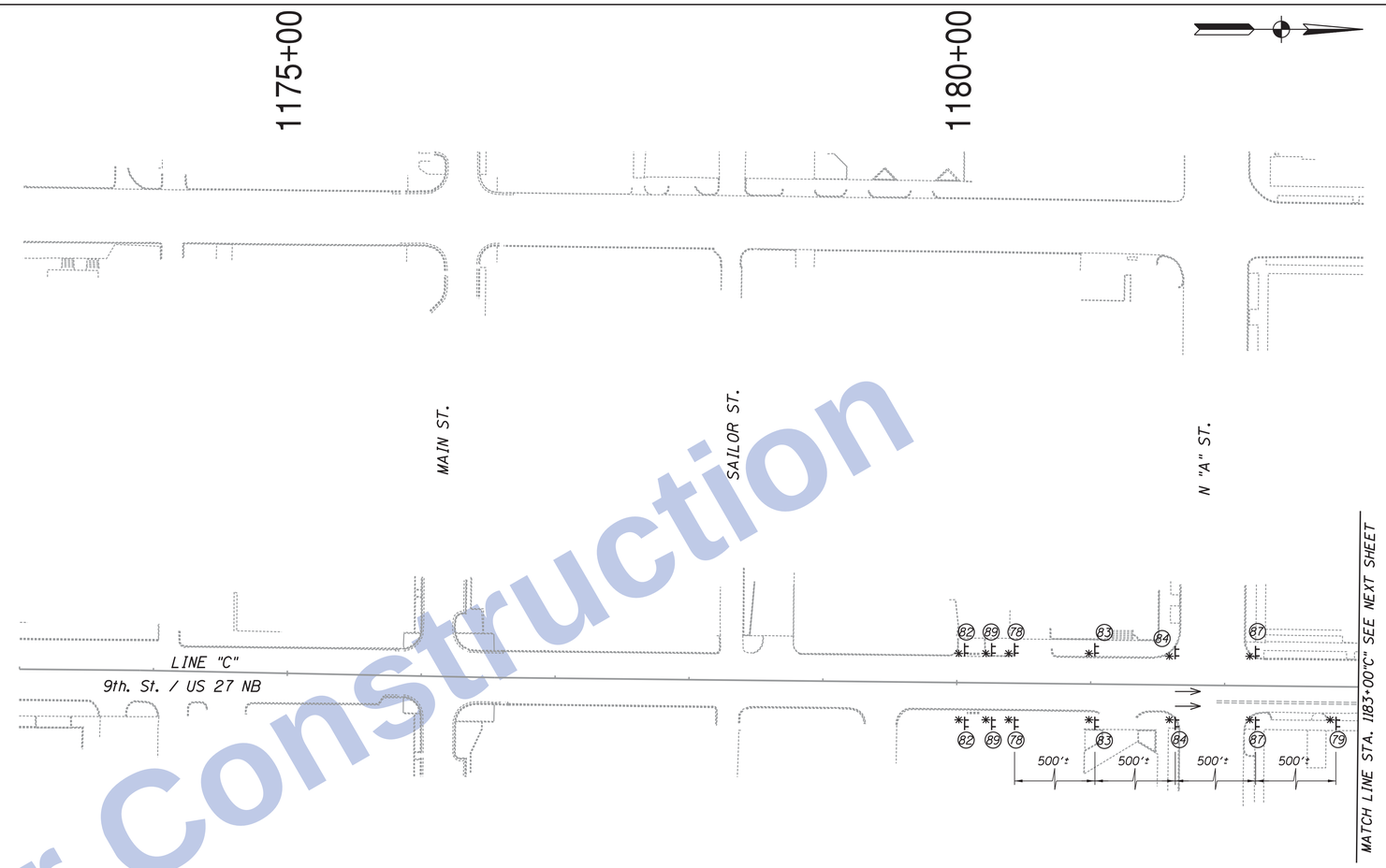

PAY ITEMS - PHASE IB	QUANTITY			
PAY ITEMS	SHEET 15	SHEET 16	TOTAL	UNIT
TEMPORARY WORKSITE SPEED LIMIT SIGN ASSEMBLY	3	4	7	EA
DETOUR ROUTE MARKER ASSEMBLY	0	5	5	EA
CONSTRUCTION SIGN, C	2	1	3	EA
ROAD CLOSURE SIGN ASSEMBLY	0	2	2	EA
TEMP. PAVEMENT MARKING, REMOVABLE, 4 IN (YELLOW)	0	1,280	1,280	LFT
TEMP. PAVEMENT MARKING, REMOVABLE, 4 IN (WHITE)	0	900	900	LFT
CONSTRUCTION SIGN, A	11	8	19	EA
CONSTRUCTION SIGN, B	0	0	0	EA
FLASHING ARROW SIGN	0	60	60	DAY
BARRICADE, III-B	0	60	60	LFT

SIGN IDENTIFICATION TABLE - PHASE IB			QUANTITY	
SIGN CODE	MESSAGE	TYPE	SHEET 15	SHEET 16
XG20-2	END CONSTRUCTION	A		3
XW103-1	WATCH FOR STOPPED TRAFFIC	A		
XW20-1	ROAD CONSTRUCTION AHEAD	A	2	4
XW20-3	ROAD CLOSED AHEAD	A		1
XW20-5	(RIGHT) OR (LEFT) LANE CLOSED AHEAD	A	3	
XW2-6-A	WORKSITE ADDED PENALTY SIGNS	C	2	1
XW4-2	LANE ENDS MERGE (RIGHT) OR (LEFT) [SYMBOL]	A	3	
XW9-2	LANE ENDS MERGE (RIGHT) OR (LEFT)	A	3	
Subtotal	Construction Sign, Type A	19	11	8
Subtotal	Construction Sign, Type B	0		
Subtotal	Construction Sign, Type C	3	2	1

Notes:

- During Construction, All Existing Signs shall Remain in Place or, if Moved, Placed in an Appropriate Location as Near as Possible to their Original Locations, Unless Otherwise Directed.
- Access to Driveways & Approaches shall be Provided at All Times Unless Otherwise directed.
- No Two Adjacent Street Approaches shall be closed at the Same Time Unless Otherwise Directed.
- Phase IB Maintenance of Traffic Sheets Only Detail Work Areas.
- All Station Callouts From Line "C" Unless Otherwise Indicated.

LEGEND

→ DIRECTION OF TRAFFIC

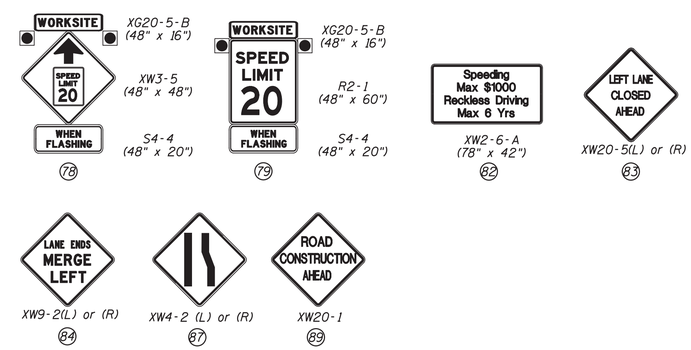

Construction Zone Design Speed: 20 MPH

Not for Construction

Clark Dietz ENGINEERS

RECOMMENDED FOR APPROVAL ____ DESIGN ENGINEER DATE		INDIANA DEPARTMENT OF TRANSPORTATION	HORIZONTAL SCALE: 1" = 50' / BRIDGE FILE
DESIGNED: JAL	DRAWN: MP	MAINTENANCE OF TRAFFIC PHASE IB US 27	VERTICAL SCALE: NONE / DESIGNATION: 0100701
CHECKED: RBI	CHECKED: JAL		SURVEY BOOK / SHEETS: 15 of 278
			CONTRACT: R-30397 / PROJECT: 0100701

12:07:59 PM8/26/2016 P:\10170190\Plans\MntOfTrf\MOT_US27_N_PH1B_NEW_01.dgn

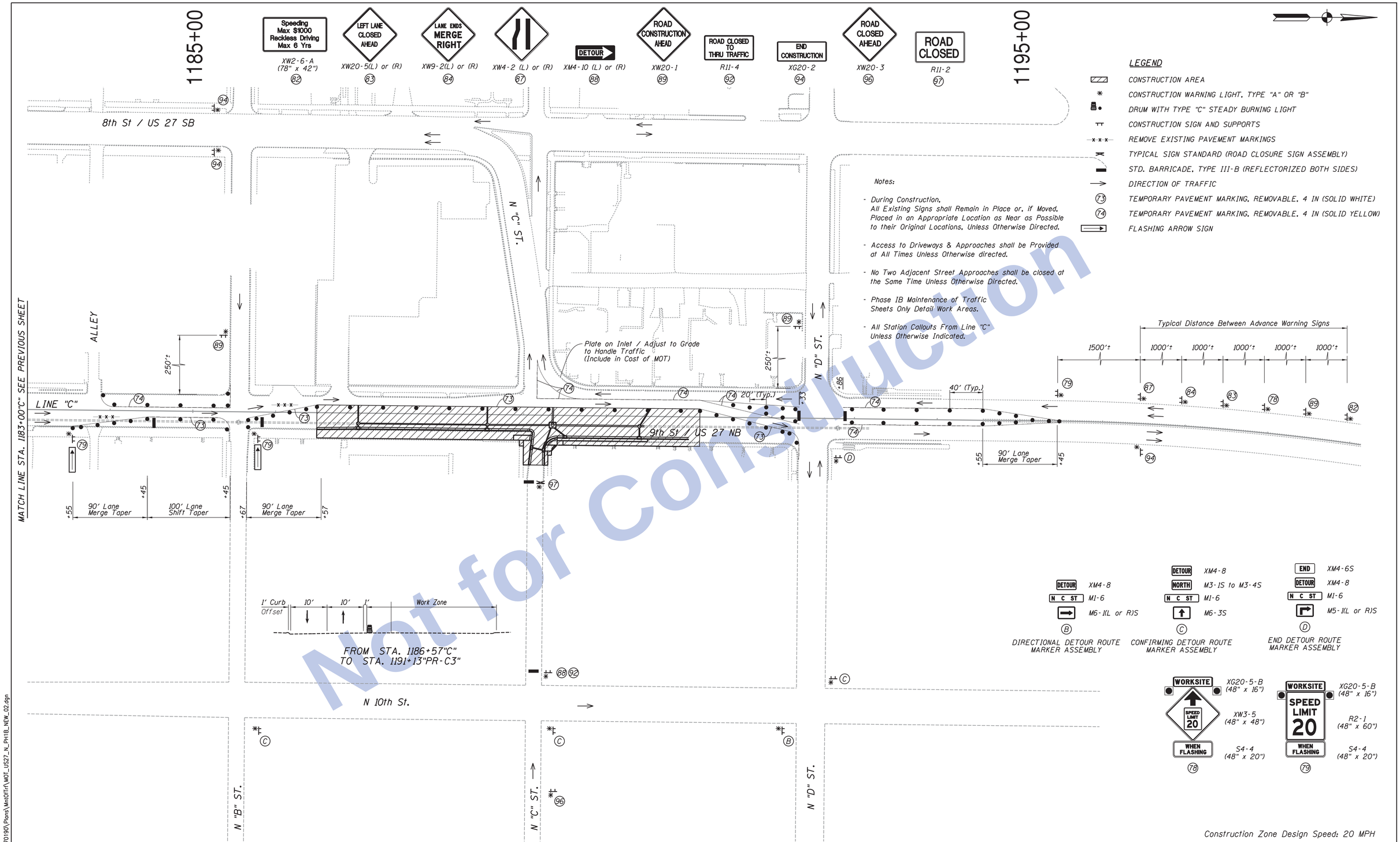

Not for Construction

12:08:01 PM 8/26/2016 P:\0170190\Plans\MnlOfTr\MOT_US27_N_PH1B_NEW_02.dgn

Clark Dietz ENGINEERS

RECOMMENDED FOR APPROVAL _____ DESIGN ENGINEER DATE

DESIGNED: JAL DRAWN: MP
CHECKED: RBI CHECKED: JAL

INDIANA DEPARTMENT OF TRANSPORTATION

MAINTENANCE OF TRAFFIC PHASE IB
US 27

HORIZONTAL SCALE	BRIDGE FILE
1" = 50'	
VERTICAL SCALE	DESIGNATION
NONE	0100701
SURVEY BOOK	SHEETS
	16 of 278
CONTRACT	PROJECT
R-30397	0100701

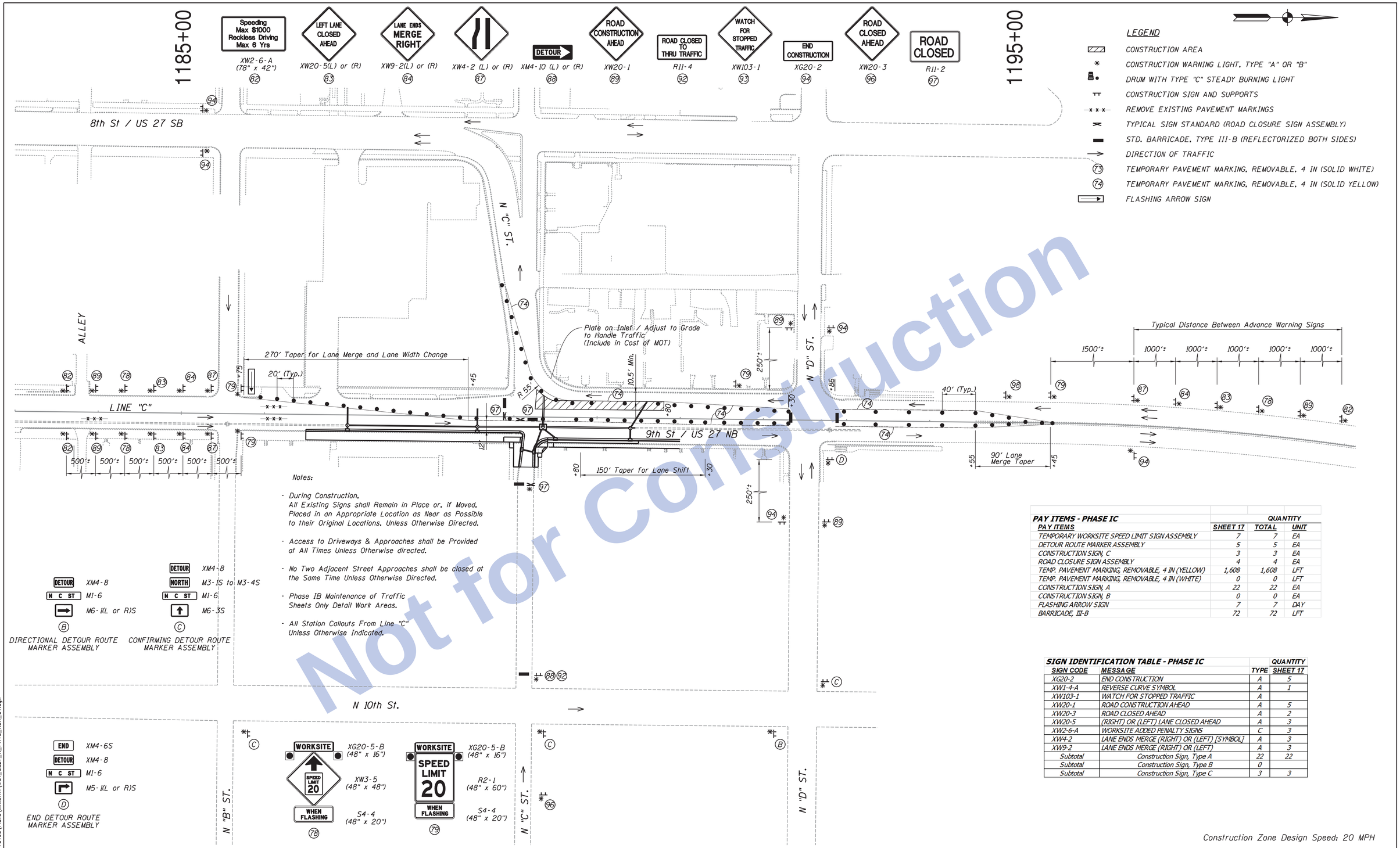

Not for Construction

PAY ITEMS - PHASE IC

PAY ITEMS	QUANTITY SHEET 17	TOTAL	UNIT
TEMPORARY WORKSITE SPEED LIMIT SIGN ASSEMBLY	7	7	EA
DETOUR ROUTE MARKER ASSEMBLY	5	5	EA
CONSTRUCTION SIGN, C	3	3	EA
ROAD CLOSURE SIGN ASSEMBLY	4	4	EA
TEMP. PAVEMENT MARKING, REMOVABLE, 4 IN (YELLOW)	1,608	1,608	LFT
TEMP. PAVEMENT MARKING, REMOVABLE, 4 IN (WHITE)	0	0	LFT
CONSTRUCTION SIGN, A	22	22	EA
CONSTRUCTION SIGN, B	0	0	EA
FLASHING ARROW SIGN	7	7	DAY
BARRICADE, III-B	72	72	LFT

SIGN IDENTIFICATION TABLE - PHASE IC

SIGN CODE	MESSAGE	TYPE	QUANTITY SHEET 17
XG20-2	END CONSTRUCTION	A	5
XW1-4-A	REVERSE CURVE SYMBOL	A	1
XW103-1	WATCH FOR STOPPED TRAFFIC	A	
XW20-1	ROAD CONSTRUCTION AHEAD	A	5
XW20-3	ROAD CLOSED AHEAD	A	2
XW20-5	(RIGHT) OR (LEFT) LANE CLOSED AHEAD	A	3
XW2-6-A	WORKSITE ADDED PENALTY SIGNS	C	3
XW4-2	LANE ENDS MERGE (RIGHT) OR (LEFT) [SYMBOL]	A	3
XW9-2	LANE ENDS MERGE (RIGHT) OR (LEFT)	A	3
Subtotal	Construction Sign, Type A	22	22
Subtotal	Construction Sign, Type B	0	
Subtotal	Construction Sign, Type C	3	3

Construction Zone Design Speed: 20 MPH

Clark Dietz ENGINEERS

RECOMMENDED FOR APPROVAL _____ DESIGN ENGINEER DATE

DESIGNED: JAL DRAWN: MP
CHECKED: RBI CHECKED: JAL

INDIANA DEPARTMENT OF TRANSPORTATION

MAINTENANCE OF TRAFFIC PHASE IC
US 27

HORIZONTAL SCALE	BRIDGE FILE
1" = 50'	
VERTICAL SCALE	DESIGNATION
NONE	0100701
SURVEY BOOK	SHEETS
	17 of 278
CONTRACT	PROJECT
R-30397	0100701

12:08:04 PM 8/26/2016 P:\0170190\Plans\MnOTrf\MOT_US27_N_PH1C_NEW_01.dgn

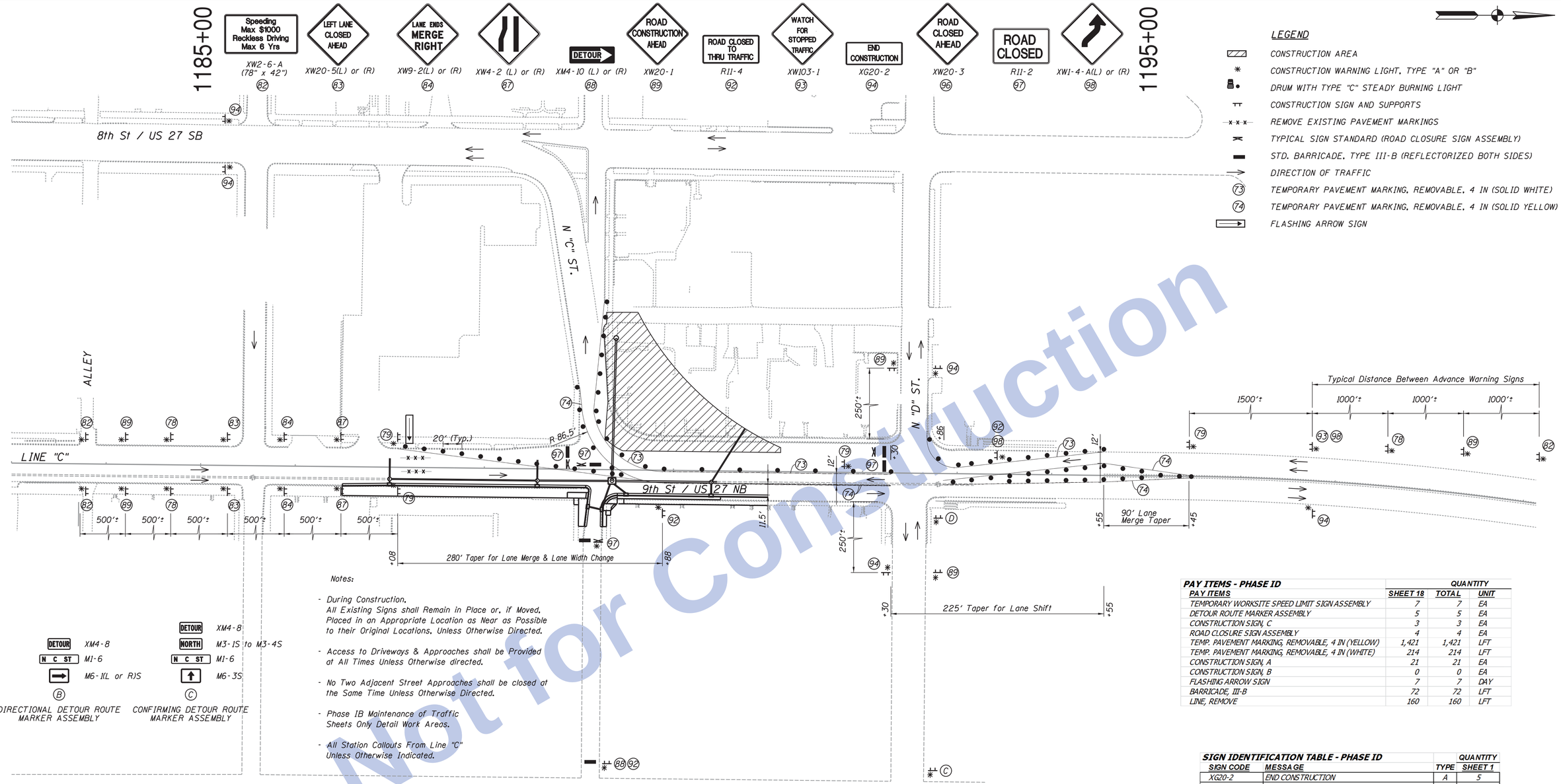

LEGEND

- CONSTRUCTION AREA
- CONSTRUCTION WARNING LIGHT, TYPE "A" OR "B"
- DRUM WITH TYPE "C" STEADY BURNING LIGHT
- CONSTRUCTION SIGN AND SUPPORTS
- REMOVE EXISTING PAVEMENT MARKINGS
- TYPICAL SIGN STANDARD (ROAD CLOSURE SIGN ASSEMBLY)
- STD. BARRICADE, TYPE III-B (REFLECTORIZED BOTH SIDES)
- DIRECTION OF TRAFFIC
- (73) TEMPORARY PAVEMENT MARKING, REMOVABLE, 4 IN (SOLID WHITE)
- (74) TEMPORARY PAVEMENT MARKING, REMOVABLE, 4 IN (SOLID YELLOW)
- FLASHING ARROW SIGN

DETOUR XM4-8
N C ST M1-6
M6-1(L or R)S
(B)
DIRECTIONAL DETOUR ROUTE MARKER ASSEMBLY

DETOUR XM4-8
NORTH M3-1S to M3-4S
N C ST M1-6
M6-3S
(C)
CONFIRMING DETOUR ROUTE MARKER ASSEMBLY

END XM4-6S
DETOUR XM4-8
N C ST M1-6
M5-1(L or R)S
(D)
END DETOUR ROUTE MARKER ASSEMBLY

WORKSITE XG20-5-B (48" x 16")
SPEED LIMIT 20 XW3-5 (48" x 48")
WHEN FLASHING S4-4 (48" x 20")
(78)

WORKSITE XG20-5-B (48" x 16")
SPEED LIMIT 20 R2-1 (48" x 60")
WHEN FLASHING S4-4 (48" x 20")
(79)

Notes:

- During Construction, All Existing Signs shall Remain in Place or, if Moved, Placed in an Appropriate Location as Near as Possible to their Original Locations, Unless Otherwise Directed.
- Access to Driveways & Approaches shall be Provided at All Times Unless Otherwise directed.
- No Two Adjacent Street Approaches shall be closed at the Same Time Unless Otherwise Directed.
- Phase IB Maintenance of Traffic Sheets Only Detail Work Areas.
- All Station Callouts From Line "C" Unless Otherwise Indicated.

PAY ITEMS - PHASE ID

PAY ITEMS	QUANTITY SHEET 18	QUANTITY TOTAL	UNIT
TEMPORARY WORKSITE SPEED LIMIT SIGN ASSEMBLY	7	7	EA
DETOUR ROUTE MARKER ASSEMBLY	5	5	EA
CONSTRUCTION SIGN, C	3	3	EA
ROAD CLOSURE SIGN ASSEMBLY	4	4	EA
TEMP. PAVEMENT MARKING, REMOVABLE, 4 IN (YELLOW)	1,421	1,421	LFT
TEMP. PAVEMENT MARKING, REMOVABLE, 4 IN (WHITE)	214	214	LFT
CONSTRUCTION SIGN, A	21	21	EA
CONSTRUCTION SIGN, B	0	0	EA
FLASHING ARROW SIGN	7	7	DAY
BARRICADE, III-B	72	72	LFT
LINE, REMOVE	160	160	LFT

SIGN IDENTIFICATION TABLE - PHASE ID

SIGN CODE	MESSAGE	TYPE	QUANTITY SHEET 1
XG20-2	END CONSTRUCTION	A	5
XW1-4-A	REVERSE CURVE SYMBOL	A	2
XW103-1	WATCH FOR STOPPED TRAFFIC	A	1
XW20-1	ROAD CONSTRUCTION AHEAD	A	5
XW20-3	ROAD CLOSED AHEAD	A	
XW20-5	(RIGHT) OR (LEFT) LANE CLOSED AHEAD	A	2
XW2-6-A	WORKSITE ADDED PENALTY SIGNS	C	3
XW4-2	LANE ENDS MERGE (RIGHT) OR (LEFT) [SYMBOL]	A	2
XW6-3-B	TWO WAY TRAFFIC SYMBOL	A	2
XW9-2	LANE ENDS MERGE (RIGHT) OR (LEFT)	A	2
Subtotal	Construction Sign, Type A	21	21
Subtotal	Construction Sign, Type B	0	
Subtotal	Construction Sign, Type C	3	3

Construction Zone Design Speed: 20 MPH

Not for Construction

Clark Dietz ENGINEERS

RECOMMENDED FOR APPROVAL _____ DESIGN ENGINEER DATE

DESIGNED: JAL DRAWN: MP
CHECKED: RBI CHECKED: JAL

INDIANA DEPARTMENT OF TRANSPORTATION

MAINTENANCE OF TRAFFIC PHASE ID
US 27

HORIZONTAL SCALE	BRIDGE FILE
1" = 50'	
VERTICAL SCALE	DESIGNATION
NONE	0100701
SURVEY BOOK	SHEETS
	18 of 278
CONTRACT	PROJECT
R-30397	0100701

12:08:07 PM 8/26/2016 P:\0170190\Plans\Mnt\Ofr\MOT_US27_N_PH1D_NEW_01.dgn

Notes:

- During Construction, All Existing Signs shall Remain in Place or, if Moved, Placed in an Appropriate Location as Near as Possible to their Original Locations, Unless Otherwise Directed.
- Access to Driveways & Approaches shall be Provided at All Times Unless Otherwise directed.
- No Two Adjacent Street Approaches shall be closed at the Same Time Unless Otherwise Directed.
- All Station Callouts From Line "C" Unless Otherwise Indicated.

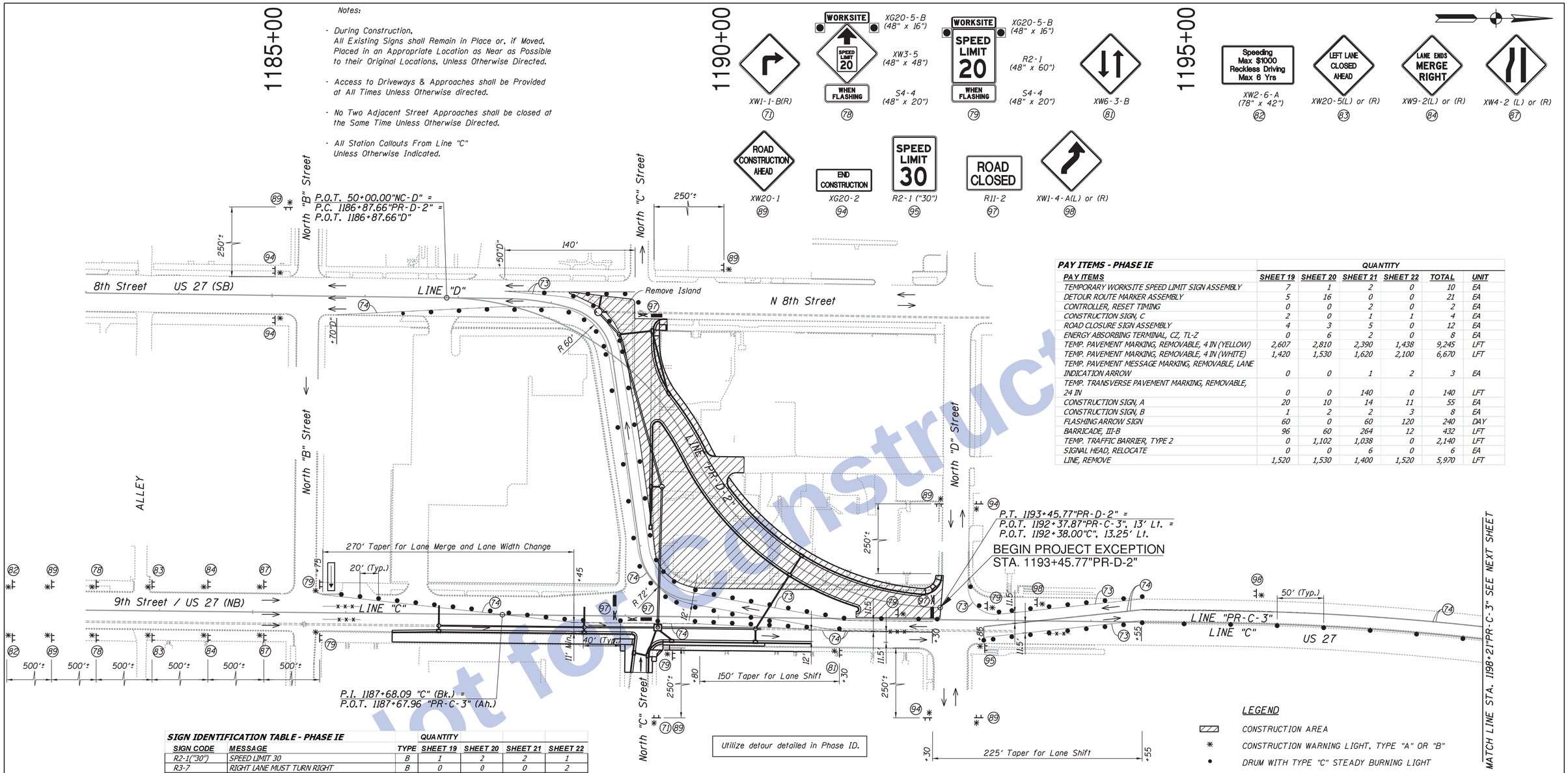

Construction Zone Design Speed: 20 MPH

PAY ITEMS - PHASE IE

PAY ITEMS	QUANTITY SHEET 19	SHEET 20	SHEET 21	SHEET 22	TOTAL	UNIT
TEMPORARY WORKSITE SPEED LIMIT SIGN ASSEMBLY	7	1	2	0	10	EA
DETOUR ROUTE MARKER ASSEMBLY	5	16	0	0	21	EA
CONTROLLER, RESET TIMING	0	0	2	0	2	EA
CONSTRUCTION SIGN, C	2	0	1	1	4	EA
ROAD CLOSURE SIGN ASSEMBLY	4	3	5	0	12	EA
ENERGY ABSORBING TERMINAL, CZ, TL-Z	0	6	2	0	8	EA
TEMP. PAVEMENT MARKING, REMOVABLE, 4 IN (YELLOW)	2,607	2,810	2,390	1,438	9,245	LFT
TEMP. PAVEMENT MARKING, REMOVABLE, 4 IN (WHITE)	1,420	1,530	1,620	2,100	6,670	LFT
TEMP. PAVEMENT MESSAGE MARKING, REMOVABLE, LANE INDICATION ARROW	0	0	1	2	3	EA
TEMP. TRANSVERSE PAVEMENT MARKING, REMOVABLE, 24 IN	0	0	140	0	140	LFT
CONSTRUCTION SIGN, A	20	10	14	11	55	EA
CONSTRUCTION SIGN, B	1	2	2	3	8	EA
FLASHING ARROW SIGN	60	0	60	120	240	DAY
BARRICADE, III-B	96	60	264	12	432	LFT
TEMP. TRAFFIC BARRIER, TYPE 2	0	1,102	1,038	0	2,140	LFT
SIGNAL HEAD, RELOCATE	0	0	6	0	6	EA
LINE, REMOVE	1,520	1,530	1,400	1,520	5,970	LFT

SIGN IDENTIFICATION TABLE - PHASE IE

SIGN CODE	MESSAGE	TYPE	QUANTITY SHEET 19	SHEET 20	SHEET 21	SHEET 22
R2-1("30")	SPEED LIMIT 30	B	1	2	2	1
R3-7	RIGHT LANE MUST TURN RIGHT	B	0	0	0	2
XG20-1	ROAD CONSTRUCTION NEXT __ MILES	A	0	0	0	1
XG20-2	END CONSTRUCTION	A	4	2	4	1
XW2-6-A	WORKSITE ADDED PENALTY SIGNS	C	2	0	1	1
XW103-1	WATCH FOR STOPPED TRAFFIC	A	0	0	0	1
XW1-1-B	TURN SYMBOL (RIGHT)	A	1	0	0	0
XW1-4-A	REVERSE CURVE SYMBOL	A	2	1	2	1
XW20-1	ROAD CONSTRUCTION AHEAD	A	6	4	6	1
XW20-3	ROAD CLOSED AHEAD	A	0	3	2	0
XW20-5	(RIGHT) OR (LEFT) LANE CLOSED AHEAD	A	2	0	0	1
XW3-5(30)	ARROW - "SPEED LIMIT 30"	A	0	0	0	1
XW4-2	LANE ENDS MERGE (RIGHT) OR (LEFT) [SYMBOL]	A	2	0	0	1
XW6-3-B	TWO WAY TRAFFIC SYMBOL	A	1	0	0	2
XW9-2	LANE ENDS MERGE (RIGHT) OR (LEFT)	A	2	0	0	1
Subtotal	Construction Sign, Type A	55	20	10	14	11
Subtotal	Construction Sign, Type B	8	1	2	2	3
Subtotal	Construction Sign, Type C	4	2	0	1	1

Not for Construction

Clark Dietz ENGINEERS

RECOMMENDED FOR APPROVAL _____ DESIGN ENGINEER DATE

DESIGNED: JAL DRAWN: MP
CHECKED: RBI CHECKED: JAL

INDIANA DEPARTMENT OF TRANSPORTATION

MAINTENANCE OF TRAFFIC PHASE IE
US 27

HORIZONTAL SCALE	BRIDGE FILE
1" = 50'	
VERTICAL SCALE	DESIGNATION
NONE	0100701
SURVEY BOOK	SHEETS
	19 of 278
CONTRACT	PROJECT
R-30397	0100701

12:08:10 PM 8/26/2016 P:\0170190\Plans\MntOfTr\MOT_US27_N_PH1E_NEW_01.dgn

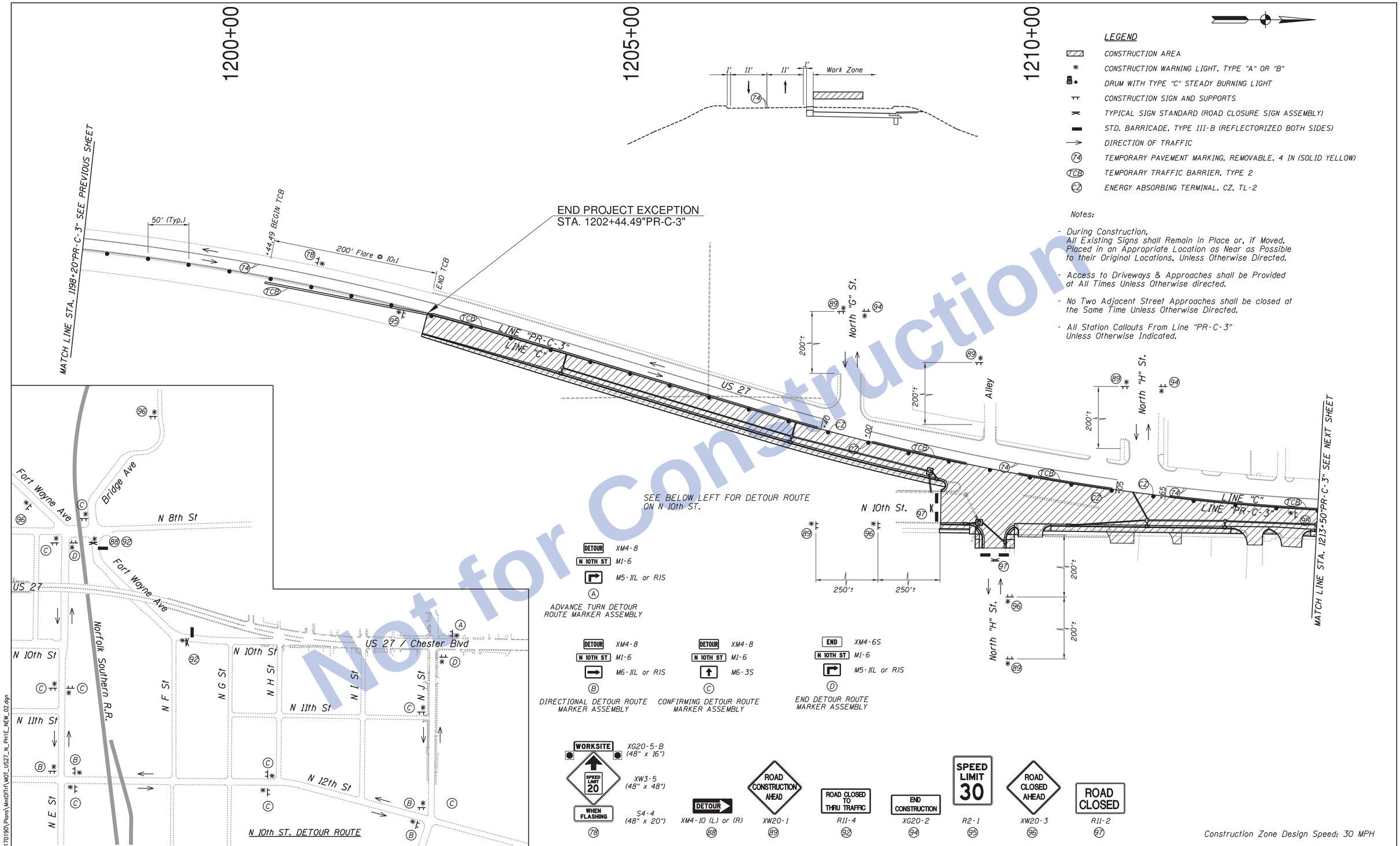

LEGEND

- CONSTRUCTION AREA
- CONSTRUCTION WARNING LIGHT, TYPE "A" OR "B"
- DRUM WITH TYPE "C" STEADY BURNING LIGHT
- CONSTRUCTION SIGN AND SUPPORTS
- TYPICAL SIGN STANDARD (ROAD CLOSURE SIGN ASSEMBLY)
- STD. BARRICADE, TYPE III-B (REFLECTORIZED BOTH SIDES)
- DIRECTION OF TRAFFIC
- (74) TEMPORARY PAVEMENT MARKING, REMOVABLE, 4 IN (SOLID YELLOW)
- (TCB) TEMPORARY TRAFFIC BARRIER, TYPE 2
- (CZ) ENERGY ABSORBING TERMINAL, CZ, TL-2

Notes:

- During Construction, All Existing Signs shall Remain in Place or, if Moved, Placed in an Appropriate Location as Near as Possible to their Original Locations, Unless Otherwise Directed.
- Access to Driveways & Approaches shall be Provided at All Times Unless Otherwise directed.
- No Two Adjacent Street Approaches shall be closed at the Same Time Unless Otherwise Directed.
- All Station Callouts From Line "PR-C-3" Unless Otherwise Indicated.

Not for Construction

Clark Dietz ENGINEERS

RECOMMENDED FOR APPROVAL _____ DESIGN ENGINEER DATE

DESIGNED: JAL DRAWN: MP
CHECKED: RBI CHECKED: JAL

INDIANA DEPARTMENT OF TRANSPORTATION

MAINTENANCE OF TRAFFIC PHASE IE
US 27

HORIZONTAL SCALE	BRIDGE FILE
1" = 50'	
VERTICAL SCALE	DESIGNATION
NONE	0100701
SURVEY BOOK	SHEETS
	20 of 278
CONTRACT	PROJECT
R-30397	0100701

12:08:12 PM 8/26/2016 P:\0170190\Plans\MntOfTr\MOT_US27_N_PH1E_NEW_02.dgn

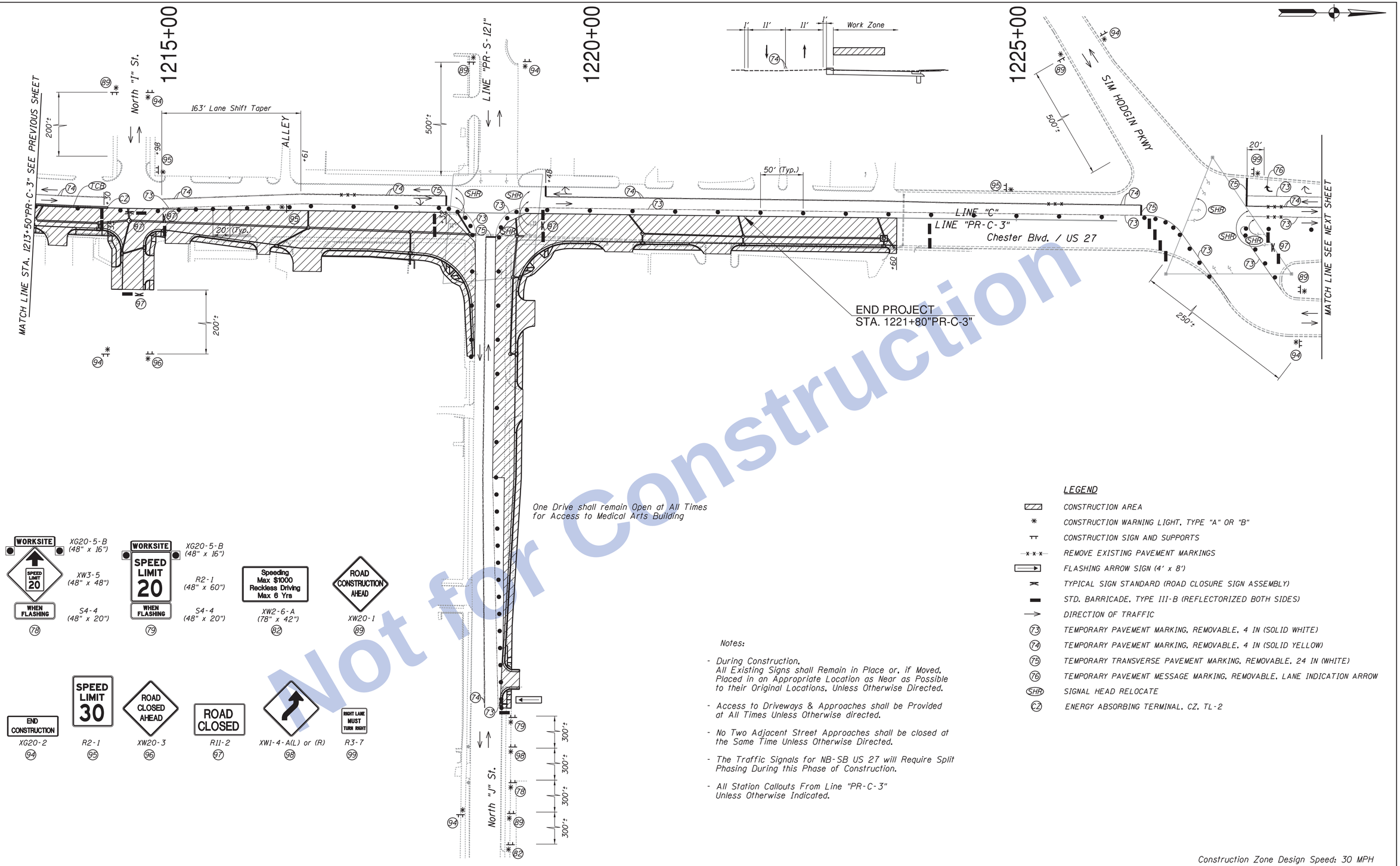

Not for Construction

Notes:

- During Construction, All Existing Signs shall Remain in Place or, if Moved, Placed in an Appropriate Location as Near as Possible to their Original Locations, Unless Otherwise Directed.
- Access to Driveways & Approaches shall be Provided at All Times Unless Otherwise directed.
- No Two Adjacent Street Approaches shall be closed at the Same Time Unless Otherwise Directed.
- The Traffic Signals for NB-SB US 27 will Require Split Phasing During this Phase of Construction.
- All Station Callouts From Line "PR-C-3" Unless Otherwise Indicated.

LEGEND

- CONSTRUCTION AREA
- CONSTRUCTION WARNING LIGHT, TYPE "A" OR "B"
- CONSTRUCTION SIGN AND SUPPORTS
- REMOVE EXISTING PAVEMENT MARKINGS
- FLASHING ARROW SIGN (4' x 8')
- TYPICAL SIGN STANDARD (ROAD CLOSURE SIGN ASSEMBLY)
- STD. BARRICADE, TYPE III-B (REFLECTORIZED BOTH SIDES)
- DIRECTION OF TRAFFIC
- 73 TEMPORARY PAVEMENT MARKING, REMOVABLE, 4 IN (SOLID WHITE)
- 74 TEMPORARY PAVEMENT MARKING, REMOVABLE, 4 IN (SOLID YELLOW)
- 75 TEMPORARY TRANSVERSE PAVEMENT MARKING, REMOVABLE, 24 IN (WHITE)
- 76 TEMPORARY PAVEMENT MESSAGE MARKING, REMOVABLE, LANE INDICATION ARROW
- SHR SIGNAL HEAD RELOCATE
- CZ ENERGY ABSORBING TERMINAL, CZ, TL-2

Construction Zone Design Speed: 30 MPH

Clark Dietz ENGINEERS

RECOMMENDED FOR APPROVAL	DESIGN ENGINEER	DATE	
DESIGNED: JAL	DRAWN: MP		
CHECKED: RBI	CHECKED: JAL		

INDIANA
DEPARTMENT OF TRANSPORTATION

MAINTENANCE OF TRAFFIC PHASE IE
US 27

HORIZONTAL SCALE	BRIDGE FILE
1" = 50'	
VERTICAL SCALE	DESIGNATION
NONE	0100701
SURVEY BOOK	SHEETS
	21 of 278
CONTRACT	PROJECT
R-30397	0100701

12:08:15 PM8/26/2016 P:\10170190\Plans\MntOfTrf\MOT_US27_N_PH1E_NEW_03.dgn

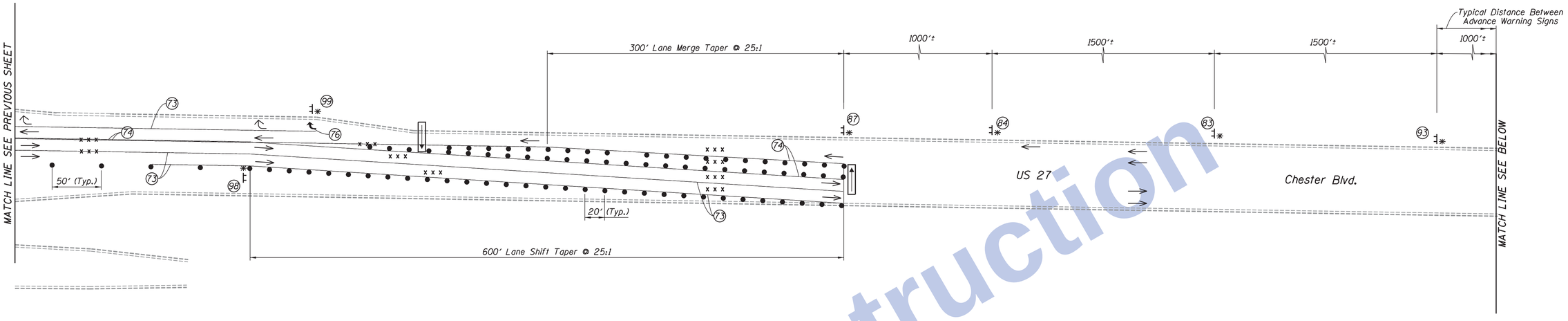

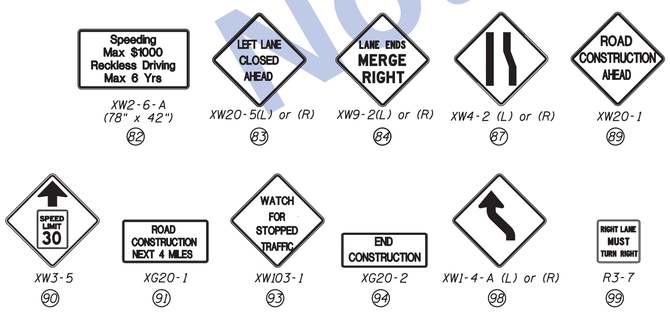

Notes:

- During Construction, All Existing Signs shall Remain in Place or, if Moved, Placed in an Appropriate Location as Near as Possible to their Original Locations, Unless Otherwise Directed.
- Access to Driveways & Approaches shall be Provided at All Times Unless Otherwise directed.
- No Two Adjacent Street Approaches shall be closed at the Same Time Unless Otherwise Directed.

LEGEND

- ✳ CONSTRUCTION WARNING LIGHT, TYPE "A" OR "B"
- • DRUM WITH TYPE "C" STEADY BURNING LIGHT
- ⊤⊤ CONSTRUCTION SIGN AND SUPPORTS
- -x-x-x- REMOVE EXISTING PAVEMENT MARKINGS
- FLASHING ARROW SIGN (4'x8')
- → DIRECTION OF TRAFFIC
- (73) TEMPORARY PAVEMENT MARKING, REMOVABLE, 4 IN (SOLID WHITE)
- (74) TEMPORARY PAVEMENT MARKING, REMOVABLE, 4 IN (SOLID YELLOW)
- (76) TEMPORARY PAVEMENT MESSAGE MARKING, REMOVABLE, LANE INDICATION ARROW

Construction Zone Design Speed: 30 MPH

Not for Construction

Clark Dietz ENGINEERS

RECOMMENDED FOR APPROVAL	DESIGN ENGINEER	DATE	
DESIGNED: JAL	DRAWN: MP		
CHECKED: RBI	CHECKED: JAL		

INDIANA
DEPARTMENT OF TRANSPORTATION

MAINTENANCE OF TRAFFIC PHASE IE
US 27

HORIZONTAL SCALE	BRIDGE FILE
1" = 50'	
VERTICAL SCALE	DESIGNATION
NONE	0100701
SURVEY BOOK	SHEETS
	22 of 278
CONTRACT	PROJECT
R-30397	0100701

12:08:17 PM8/26/2016 P:\10170190\Plans\MnOfTrf\MOT_US27_N_PH1E_NEW_04.dgn

Notes:

- During Construction.
  All Existing Signs shall Remain in Place or, if Moved, Placed in an Appropriate Location as Near as Possible to their Original Locations, Unless Otherwise Directed.
- Access to Driveways & Approaches shall be Provided at All Times Unless Otherwise directed.
- No Two Adjacent Street Approaches shall be closed at the Same Time Unless Otherwise Directed.
- All Station Callouts From Line "C" Unless Otherwise Indicated.

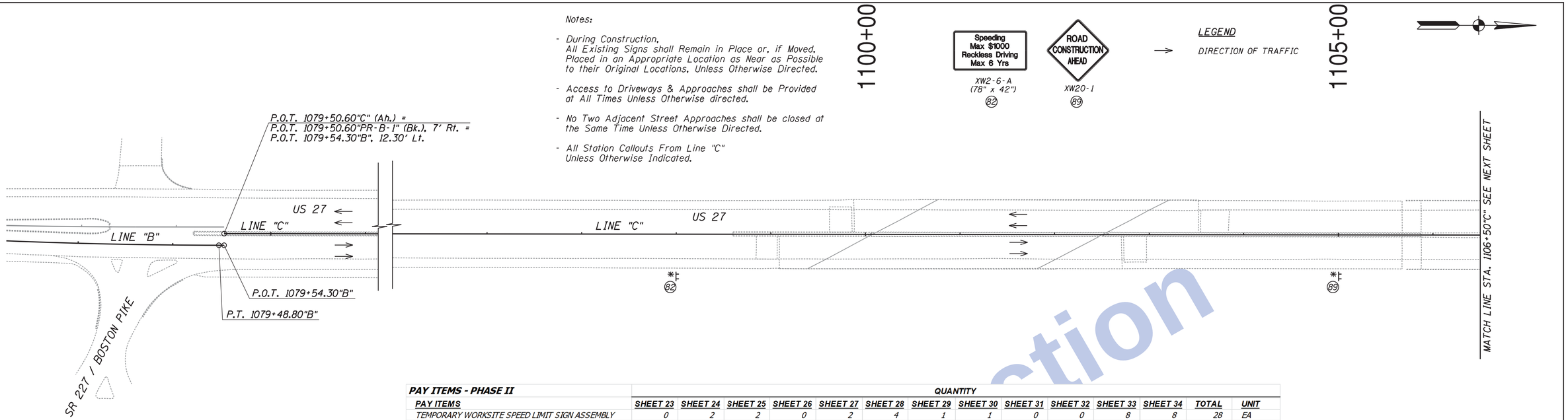

PAY ITEMS - PHASE II	QUANTITY													
PAY ITEMS	SHEET 23	SHEET 24	SHEET 25	SHEET 26	SHEET 27	SHEET 28	SHEET 29	SHEET 30	SHEET 31	SHEET 32	SHEET 33	SHEET 34	TOTAL	UNIT
TEMPORARY WORKSITE SPEED LIMIT SIGN ASSEMBLY	0	2	2	0	2	4	1	1	0	0	8	8	28	EA
DETOUR ROUTE MARKER ASSEMBLY	0	0	0	0	0	0	5	0	0	0	0	0	5	EA
CONTROLLER, RESET TIMING	0	0	0	0	0	0	0	0	2	0	2	2	6	EA
CONSTRUCTION SIGN, C	1	0	0	0	0	0	0	0	1	1	2	2	7	EA
ROAD CLOSURE SIGN ASSEMBLY	0	6	4	5	2	3	5	3	5	0	4	5	42	EA
ENERGY ABSORBING TERMINAL, CZ, TL-Z	0	0	0	0	0	0	0	6	2	0	0	0	8	EA
TEMP. PAVEMENT MARKING, REMOVABLE, 4 IN (YELLOW)	0	832	0	1,170	590	390	3,075	2,810	2,390	1,438	2,060	1,225	15,980	LFT
TEMP. PAVEMENT MARKING, REMOVABLE, 4 IN (WHITE)	0	1,045	1,500	570	1,150	1,350	875	1,530	1,620	2,100	540	770	13,050	LFT
TEMP. PAVEMENT MESSAGE MARKING, REMOVABLE, LANE INDICATION ARROW	0	0	0	1	0	0	0	0	1	2	0	0	4	EA
TEMP. TRANSVERSE PAVEMENT MARKING, REMOVABLE, 24 IN	0	0	0	0	0	0	0	0	140	0	0	50	190	LFT
CONSTRUCTION SIGN, A	1	14	10	15	5	16	15	10	15	11	16	16	144	EA
CONSTRUCTION SIGN, B	0	0	0	0	0	0	0	2	2	3	0	0	7	EA
FLASHING ARROW SIGN	0	90	0	90	90	180	180	0	0	180	180	90	1,080	DAY
BARRICADE, III-B	0	144	96	120	96	120	180	60	264	12	120	132	1,344	LFT
TEMP. TRAFFIC BARRIER, TYPE 2	0	0	0	0	0	0	0	1,185	285	0	0	0	1,470	LFT
SIGNAL HEAD, RELOCATE	0	0	0	0	0	2	0	0	6	0	2	2	12	EA
LINE, REMOVE	0	240	0	240	240	340	555	1,530	1,400	1,520	1,285	0	7,350	LFT

SIGN IDENTIFICATION TABLE - PHASE II			QUANTITY											
SIGN CODE	MESSAGE	TYPE	SHEET 23	SHEET 24	SHEET 25	SHEET 26	SHEET 27	SHEET 28	SHEET 29	SHEET 30	SHEET 31	SHEET 32	SHEET 33	SHEET 34
R2-1("30")	SPEED LIMIT 30	B	0	0	0	0	0	0	0	2	2	1	0	0
R3-7	RIGHT LANE MUST TURN RIGHT	B	0	0	0	0	0	0	0	0	0	2	0	0
XG20-1	ROAD CONSTRUCTION NEXT __ MILES	A	0	0	0	0	0	0	0	0	0	1	0	0
XG20-2	END CONSTRUCTION	A	0	7	5	6	2	3	4	2	5	1	2	2
XW2-6-A	WORKSITE ADDED PENALTY SIGNS	C	1	0	0	0	0	0	0	0	1	1	2	2
XW103-1	WATCH FOR STOPPED TRAFFIC	A	0	0	0	0	0	0	0	0	0	1	0	0
XW1-1-B	TURN SYMBOL (RIGHT)	A	0	0	0	0	0	0	1	0	0	0	0	0
XW1-2-A	CURVE SYMBOL	A	0	0	0	0	0	0	1	0	0	0	0	0
XW1-4-A	REVERSE CURVE SYMBOL	A	0	1	0	1	1	1	1	1	1	1	0	0
XW20-1	ROAD CONSTRUCTION AHEAD SIGNS	A	1	3	3	5	1	6	7	4	6	1	6	6
XW20-3	ROAD CLOSED AHEAD	A	0	3	2	3	1	0	1	3	3	0	0	0
XW20-5	(RIGHT) OR (LEFT) LANE CLOSED AHEAD	A	0	0	0	0	0	2	0	0	0	1	0	0
XW3-5(30)	ARROW - "SPEED LIMIT 30"	A	0	0	0	0	0	0	0	0	0	1	0	0
XW4-2	LANE ENDS MERGE (RIGHT) OR (LEFT) [SYMBOL]	A	0	0	0	0	0	2	0	0	0	1	4	4
XW6-3-B	TWO WAY TRAFFIC SYMBOL	A	0	0	0	0	0	0	0	0	0	2	0	0
XW9-2	LANE ENDS MERGE (RIGHT) OR (LEFT)	A	0	0	0	0	0	2	0	0	0	1	4	4
Subtotal	Construction Sign, Type A	144	1	14	10	15	5	16	15	10	15	11	16	16
Subtotal	Construction Sign, Type B	7	0	0	0	0	0	0	0	2	2	3	0	0

Not for Construction

Clark Dietz
ENGINEERS

RECOMMENDED FOR APPROVAL _____ DESIGN ENGINEER DATE

DESIGNED: JAL DRAWN: MP
CHECKED: RBI CHECKED: JAL

INDIANA
DEPARTMENT OF TRANSPORTATION

MAINTENANCE OF TRAFFIC PHASE II
US 27

HORIZONTAL SCALE	BRIDGE FILE
1" = 50'	
VERTICAL SCALE	DESIGNATION
NONE	0100701
SURVEY BOOK	SHEETS
	23 of 278
CONTRACT	PROJECT
R-30397	0100701

12:08:20 PM 8/26/2016 P:\0170190\Plans\MnlOTr\MOT_US27_N_PH2_01.dgn

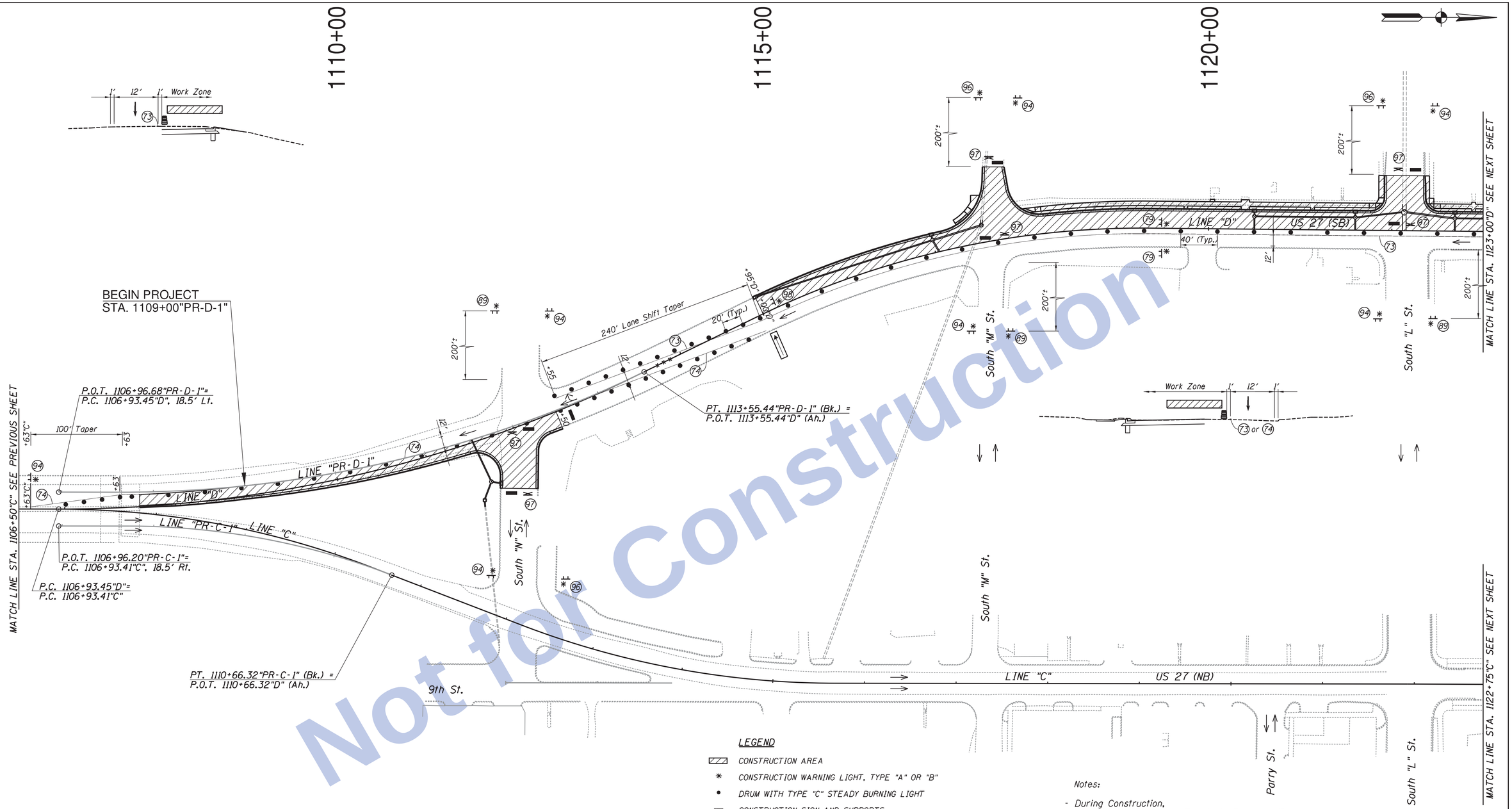

Not for Construction

LEGEND

- CONSTRUCTION AREA
- CONSTRUCTION WARNING LIGHT, TYPE "A" OR "B"
- DRUM WITH TYPE "C" STEADY BURNING LIGHT
- CONSTRUCTION SIGN AND SUPPORTS
- REMOVE EXISTING PAVEMENT MARKINGS
- STD. BARRICADE, TYPE III-B (REFLECTORIZED BOTH SIDES)
- DIRECTION OF TRAFFIC
- TYPICAL SIGN STANDARD (ROAD CLOSURE SIGN ASSEMBLY)
- FLASHING ARROW SIGN (4'x8')
- (73) TEMPORARY PAVEMENT MARKING, REMOVABLE, 4 IN (SOLID WHITE)
- (74) TEMPORARY PAVEMENT MARKING, REMOVABLE, 4 IN (SOLID YELLOW)

Notes:

- During Construction, All Existing Signs shall Remain in Place or, if Moved, Placed in an Appropriate Location as Near as Possible to their Original Locations, Unless Otherwise Directed.
- Access to Driveways & Approaches shall be Provided at All Times Unless Otherwise directed.
- No Two Adjacent Street Approaches shall be closed at the Same Time Unless Otherwise Directed.
- All Station Callouts From Line "PR-D-1" Unless Otherwise Indicated.

Construction Zone Design Speed: 20 MPH

Clark Dietz ENGINEERS

RECOMMENDED FOR APPROVAL _____ DESIGN ENGINEER DATE

DESIGNED: JAL DRAWN: MP
CHECKED: RBI CHECKED: JAL

INDIANA
DEPARTMENT OF TRANSPORTATION

MAINTENANCE OF TRAFFIC PHASE II
US 27

HORIZONTAL SCALE	BRIDGE FILE
1" = 50'	
VERTICAL SCALE	DESIGNATION
NONE	0100701
SURVEY BOOK	SHEETS
	24 of 278
CONTRACT	PROJECT
R-30397	0100701

12:08:23 PM 8/26/2016 P:\0170190\Plans\Wet01fr1\WOT_US27_N_PH2_02.dgn

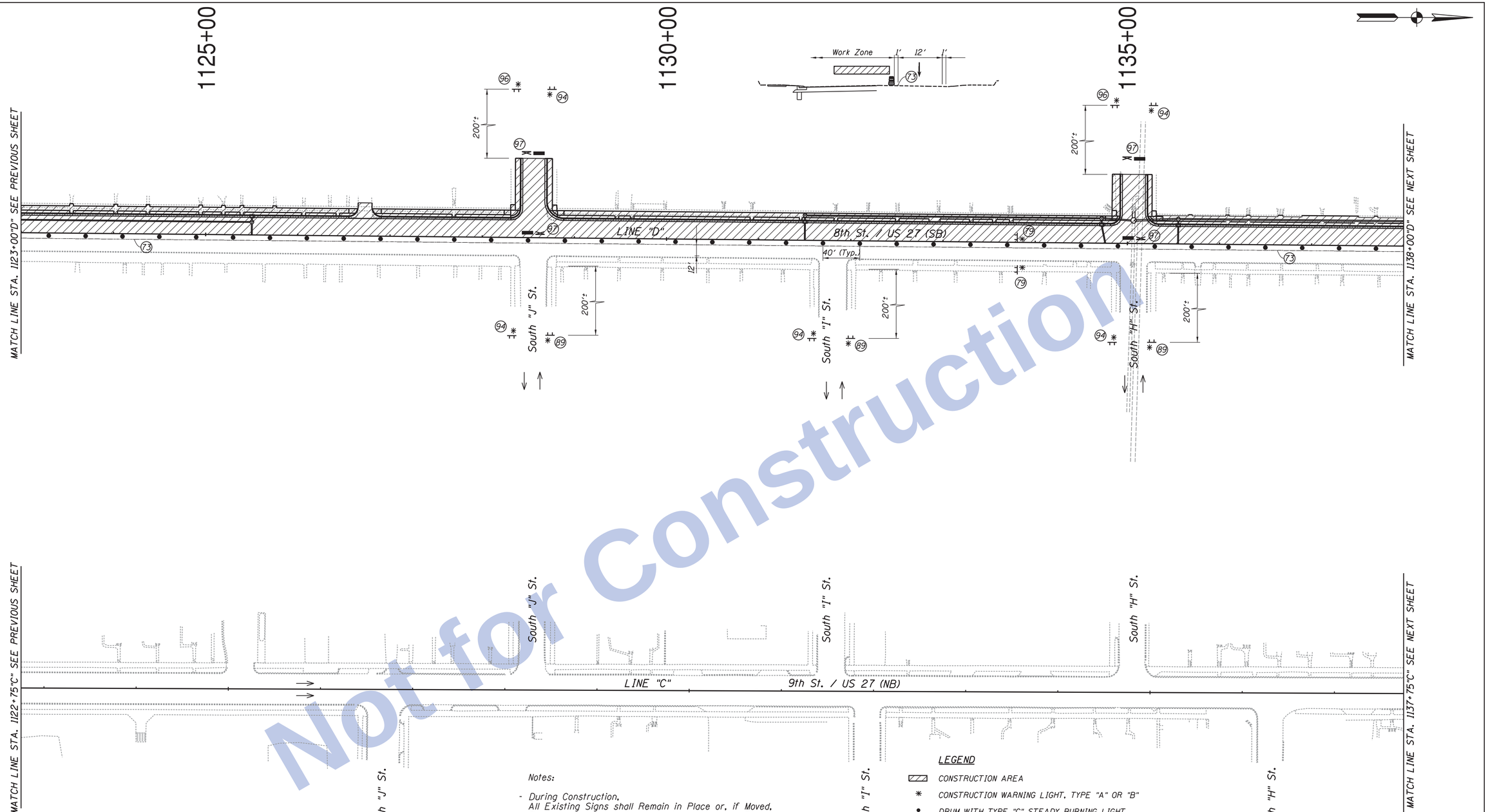

Not for Construction

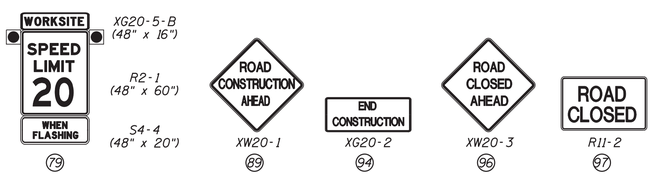

Notes:

- During Construction, All Existing Signs shall Remain in Place or, if Moved, Placed in an Appropriate Location as Near as Possible to their Original Locations, Unless Otherwise Directed.
- Access to Driveways & Approaches shall be Provided at All Times Unless Otherwise directed.
- No Two Adjacent Street Approaches shall be closed at the Same Time Unless Otherwise Directed.
- All Station Callouts From Line "D" Unless Otherwise Indicated.

LEGEND

- CONSTRUCTION AREA
- CONSTRUCTION WARNING LIGHT, TYPE "A" OR "B"
- DRUM WITH TYPE "C" STEADY BURNING LIGHT
- CONSTRUCTION SIGN AND SUPPORTS
- STD. BARRICADE, TYPE III-B (REFLECTORIZED BOTH SIDES)
- DIRECTION OF TRAFFIC
- TYPICAL SIGN STANDARD (ROAD CLOSURE SIGN ASSEMBLY)
- (73) TEMPORARY PAVEMENT MARKING, REMOVABLE, 4 IN (SOLID WHITE)

Construction Zone Design Speed: 20 MPH

Clark Dietz ENGINEERS

RECOMMENDED FOR APPROVAL _____ DESIGN ENGINEER DATE

DESIGNED: JAL DRAWN: MP
CHECKED: RBI CHECKED: JAL

INDIANA DEPARTMENT OF TRANSPORTATION

MAINTENANCE OF TRAFFIC PHASE II
US 27

HORIZONTAL SCALE	BRIDGE FILE
1" = 50'	
VERTICAL SCALE	DESIGNATION
NONE	0100701
SURVEY BOOK	SHEETS
	25 of 278
CONTRACT	PROJECT
R-30397	0100701

12:08:25 PM 8/26/2016 P:\0170190\Plans\Wet01fr1\MOT_US27_N_PH2_03.dgn

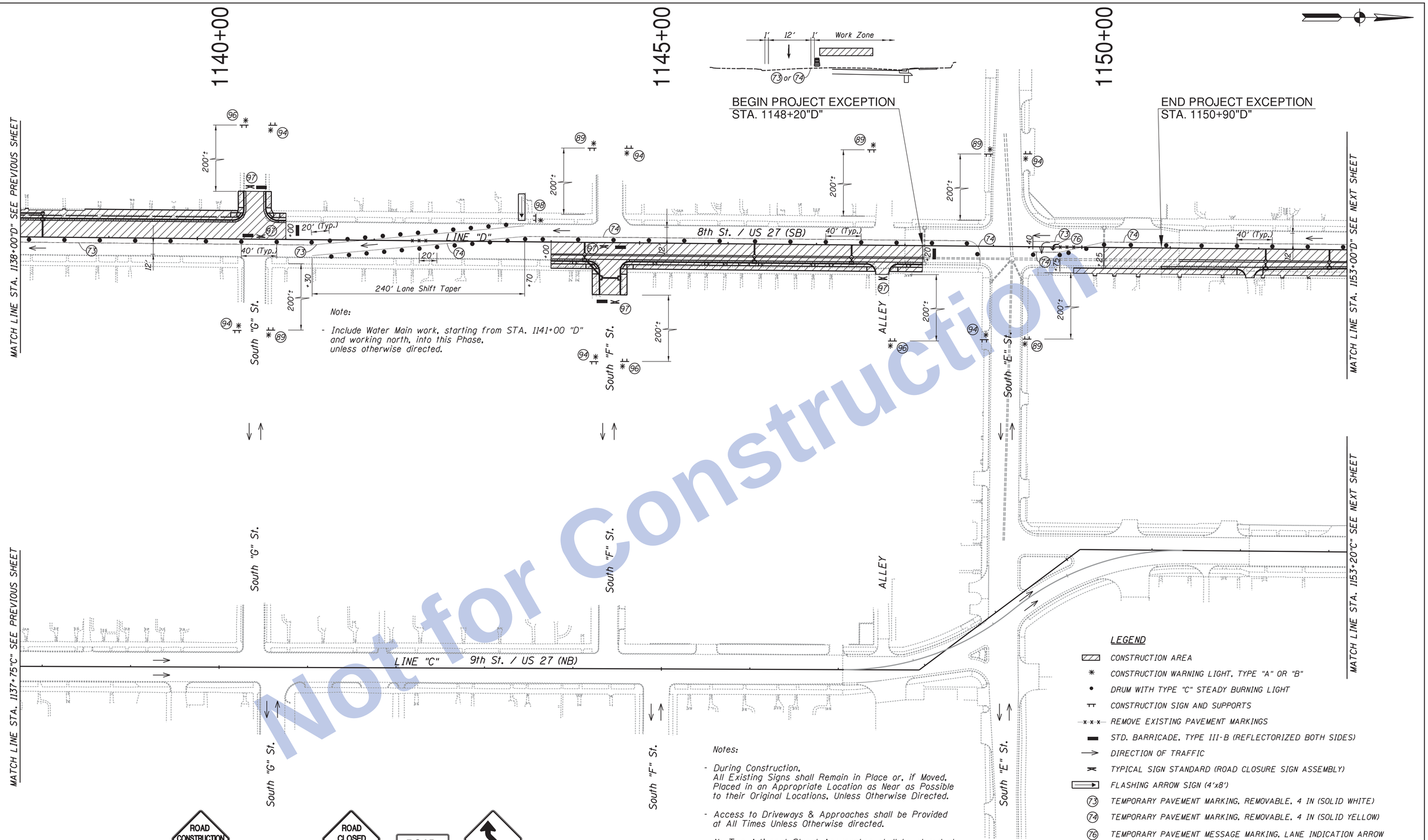

Not for Construction

Notes:

- During Construction, All Existing Signs shall Remain in Place or, if Moved, Placed in an Appropriate Location as Near as Possible to their Original Locations, Unless Otherwise Directed.
- Access to Driveways & Approaches shall be Provided at All Times Unless Otherwise directed.
- No Two Adjacent Street Approaches shall be closed at the Same Time Unless Otherwise Directed.
- All Station Callouts From Line "D" Unless Otherwise Indicated.

LEGEND

- CONSTRUCTION AREA
- CONSTRUCTION WARNING LIGHT, TYPE "A" OR "B"
- DRUM WITH TYPE "C" STEADY BURNING LIGHT
- CONSTRUCTION SIGN AND SUPPORTS
- REMOVE EXISTING PAVEMENT MARKINGS
- STD. BARRICADE, TYPE III-B (REFLECTORIZED BOTH SIDES)
- DIRECTION OF TRAFFIC
- TYPICAL SIGN STANDARD (ROAD CLOSURE SIGN ASSEMBLY)
- FLASHING ARROW SIGN (4'x8')
- 73 TEMPORARY PAVEMENT MARKING, REMOVABLE, 4 IN (SOLID WHITE)
- 74 TEMPORARY PAVEMENT MARKING, REMOVABLE, 4 IN (SOLID YELLOW)
- 76 TEMPORARY PAVEMENT MESSAGE MARKING, LANE INDICATION ARROW

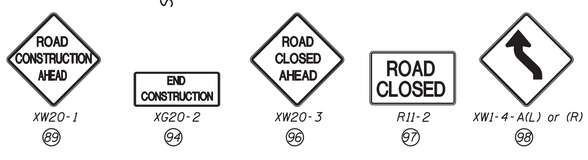

Construction Zone Design Speed: 20 MPH

Clark Dietz
ENGINEERS

RECOMMENDED FOR APPROVAL _____ DESIGN ENGINEER DATE

DESIGNED: JAL DRAWN: MP
CHECKED: RBI CHECKED: JAL

INDIANA
DEPARTMENT OF TRANSPORTATION

MAINTENANCE OF TRAFFIC PHASE II
US 27

HORIZONTAL SCALE	BRIDGE FILE
1" = 50'	
VERTICAL SCALE	DESIGNATION
NONE	0100701
SURVEY BOOK	SHEETS
	26 of 278
CONTRACT	PROJECT
R-30397	0100701

12:08:27 PM 8/26/2016 P:\0170190\Plans\Mnt\Trf\MOT_US27_IL_PH2_04.dgn

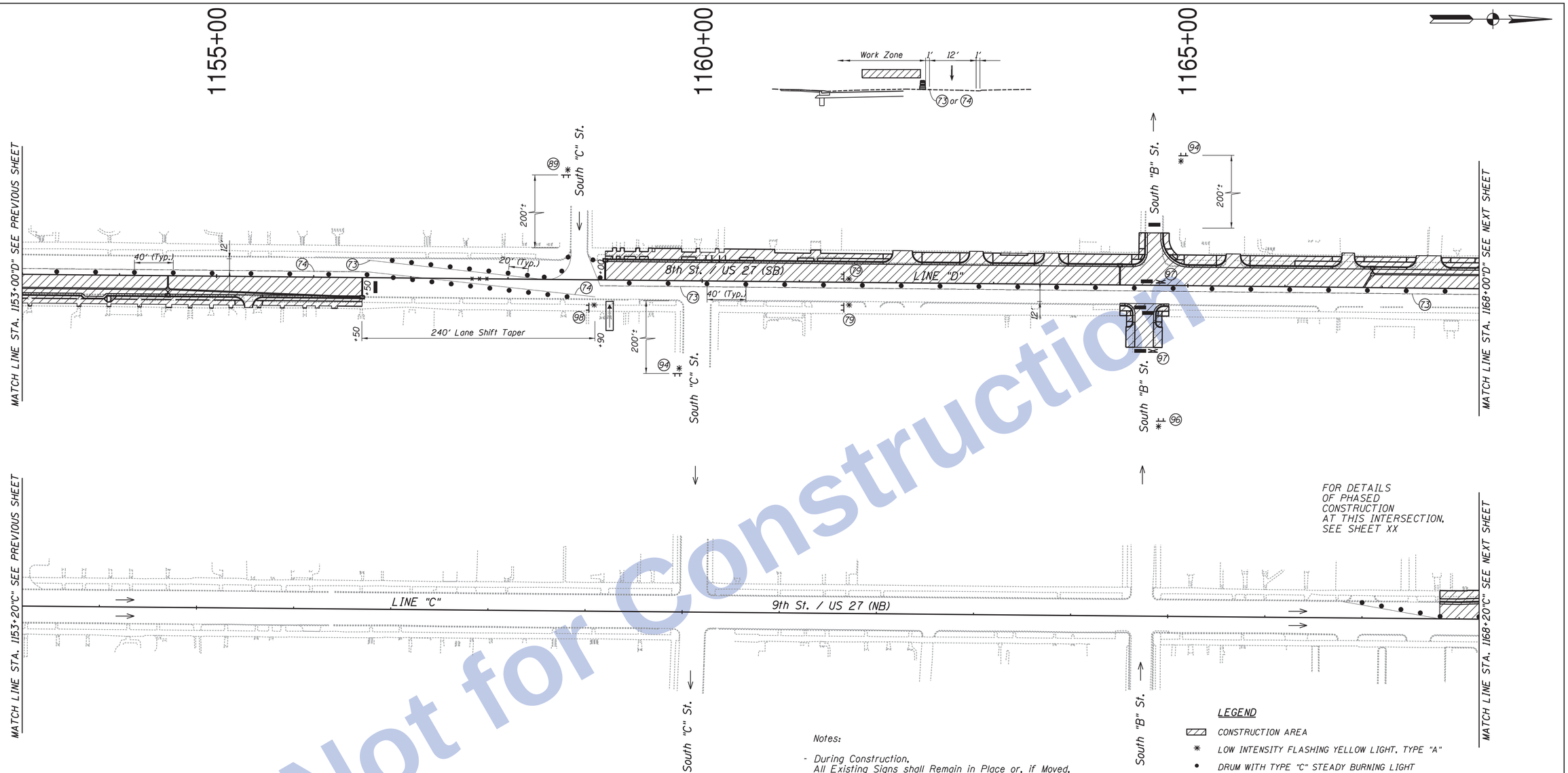

Not for Construction

Notes:

- During Construction, All Existing Signs shall Remain in Place or, if Moved, Placed in an Appropriate Location as Near as Possible to their Original Locations, Unless Otherwise Directed.
- Access to Driveways & Approaches shall be Provided at All Times Unless Otherwise directed.
- No Two Adjacent Street Approaches shall be closed at the Same Time Unless Otherwise Directed.
- All Station Callouts From Line "D" Unless Otherwise Indicated.

LEGEND

- CONSTRUCTION AREA
- LOW INTENSITY FLASHING YELLOW LIGHT, TYPE "A"
- DRUM WITH TYPE "C" STEADY BURNING LIGHT
- CONSTRUCTION SIGN AND SUPPORTS
- REMOVE EXISTING PAVEMENT MARKINGS
- STD. BARRICADE, TYPE III-B (REFLECTORIZED BOTH SIDES)
- DIRECTION OF TRAFFIC
- TYPICAL SIGN STANDARD (ROAD CLOSURE SIGN ASSEMBLY)
- FLASHING ARROW SIGN (4'x8')
- 73 TEMPORARY PAVEMENT MARKING, REMOVABLE, 4 IN (SOLID WHITE)
- 74 TEMPORARY PAVEMENT MARKING, REMOVABLE, 4 IN (SOLID YELLOW)

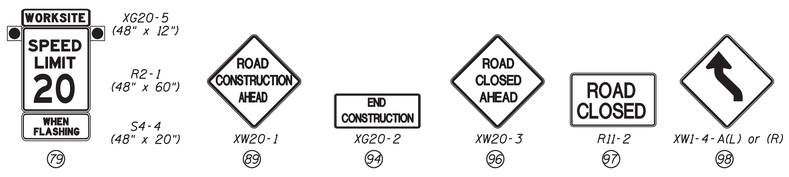

Construction Zone Design Speed: 20 MPH

Clark Dietz ENGINEERS

RECOMMENDED FOR APPROVAL ____ DESIGN ENGINEER DATE	INDIANA DEPARTMENT OF TRANSPORTATION	HORIZONTAL SCALE 1" = 50'	BRIDGE FILE
		VERTICAL SCALE NONE	DESIGNATION 0100701
DESIGNED: JAL / DRAWN: MP	MAINTENANCE OF TRAFFIC PHASE II US 27	SURVEY BOOK	SHEETS 27 of 278
CHECKED: RBI / CHECKED: JAL		CONTRACT R-30397	PROJECT 0100701

12:08:30 PM 8/26/2016 P:\0170190\Plans\MnlOTrf\MOT_US27_N_PH2_05.dgn

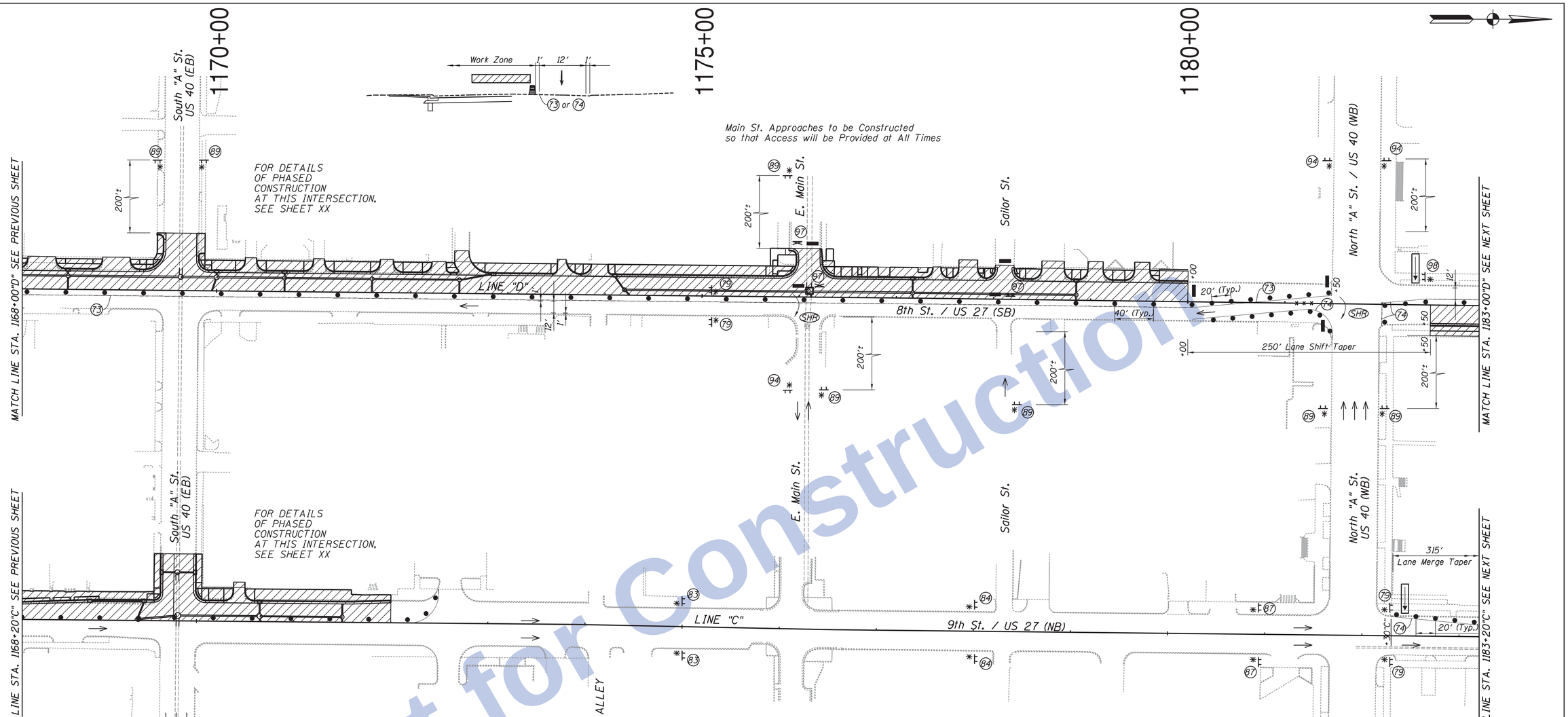

Notes:

- During Construction, All Existing Signs shall Remain in Place or, if Moved, Placed in an Appropriate Location as Near as Possible to their Original Locations, Unless Otherwise Directed.
- Access to Driveways & Approaches shall be Provided at All Times Unless Otherwise directed.
- No Two Adjacent Street Approaches shall be closed at the Same Time Unless Otherwise Directed.
- All Station Callouts From Line "D" Unless Otherwise Indicated.

LEGEND

- CONSTRUCTION AREA
- CONSTRUCTION WARNING LIGHT, TYPE "A" OR "B"
- DRUM WITH TYPE "C" STEADY BURNING LIGHT
- CONSTRUCTION SIGN AND SUPPORTS
- REMOVE EXISTING PAVEMENT MARKINGS
- STD. BARRICADE, TYPE III-B (REFLECTORIZED BOTH SIDES)
- DIRECTION OF TRAFFIC
- TYPICAL SIGN STANDARD (ROAD CLOSURE SIGN ASSEMBLY)
- FLASHING ARROW SIGN (4'x8')
- 73 TEMPORARY PAVEMENT MARKING, REMOVABLE, 4 IN (SOLID WHITE)
- 74 TEMPORARY PAVEMENT MARKING, REMOVABLE, 4 IN (SOLID YELLOW)
- SHR SIGNAL HEAD RELOCATE

WORKSITE SPEED LIMIT 20 WHEN FLASHING — XG20-5-B (48" x 16"); R2-1 (48" x 60"); S4-4 (48" x 20") — 79

LEFT LANE CLOSED AHEAD — XW20-5(L) or (R) — 83

LANE ENDS MERGE LEFT — XW9-2(L) or (R) — 84

XW4-2 (L) or (R) — 87

ROAD CONSTRUCTION AHEAD — XW20-1 — 89

END CONSTRUCTION — XG20-2 — 94

ROAD CLOSED — R11-2 — 97

XW1-4-A(L) or (R) — 98

Construction Zone Design Speed: 20 MPH

Not for Construction

Clark Dietz ENGINEERS

RECOMMENDED FOR APPROVAL _____ DESIGN ENGINEER DATE

DESIGNED: JAL DRAWN: MP
CHECKED: RBI CHECKED: JAL

INDIANA
DEPARTMENT OF TRANSPORTATION

MAINTENANCE OF TRAFFIC PHASE II
US 27

HORIZONTAL SCALE	BRIDGE FILE
1" = 50'	
VERTICAL SCALE	DESIGNATION
NONE	0100701
SURVEY BOOK	SHEETS
	28 of 278
CONTRACT	PROJECT
R-30397	0100701

12:08:32 PM 8/26/2016 P:\0170190\Plans\MntOfTr\MOT_US27_N_PH2_06.dgn

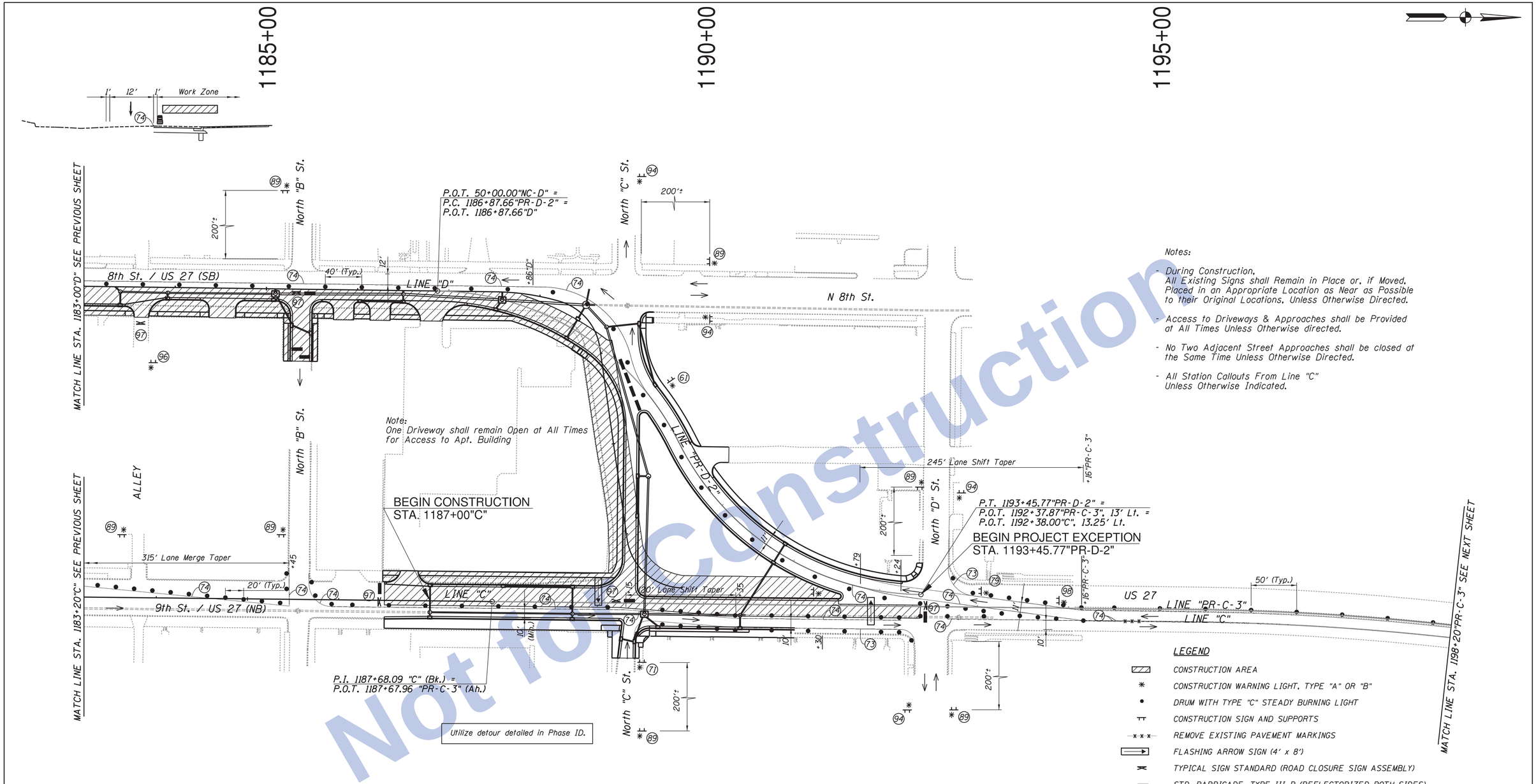

Notes:

- During Construction, All Existing Signs shall Remain in Place or, if Moved, Placed in an Appropriate Location as Near as Possible to their Original Locations, Unless Otherwise Directed.
- Access to Driveways & Approaches shall be Provided at All Times Unless Otherwise directed.
- No Two Adjacent Street Approaches shall be closed at the Same Time Unless Otherwise Directed.
- All Station Callouts From Line "C" Unless Otherwise Indicated.

Construction Zone Design Speed: 20 MPH

Not for Construction

Clark Dietz ENGINEERS

RECOMMENDED FOR APPROVAL _____ DESIGN ENGINEER DATE

DESIGNED: JAL DRAWN: MP
CHECKED: RBI CHECKED: JAL

INDIANA
DEPARTMENT OF TRANSPORTATION

MAINTENANCE OF TRAFFIC PHASE II
US 27

HORIZONTAL SCALE	BRIDGE FILE
1" = 50'	
VERTICAL SCALE	DESIGNATION
NONE	0100701
SURVEY BOOK	SHEETS
	29 of 278
CONTRACT	PROJECT
R-30397	0100701

12:08:34 PM 8/26/2016 P:\0170190\Plans\MntOfTr\MOT_US27_N_PH2_07.dgn

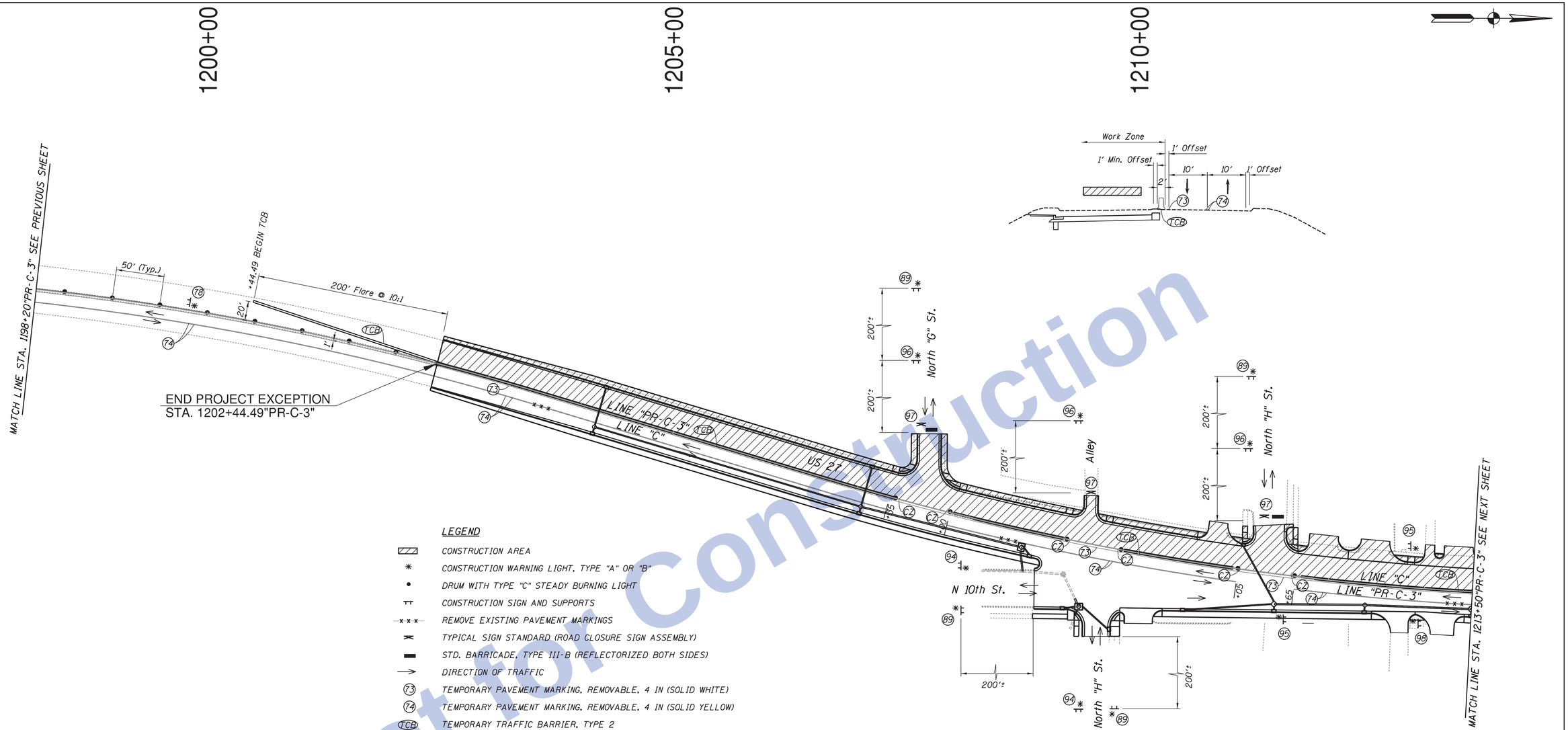

Not for Construction

LEGEND

- CONSTRUCTION AREA
- CONSTRUCTION WARNING LIGHT, TYPE "A" OR "B"
- DRUM WITH TYPE "C" STEADY BURNING LIGHT
- CONSTRUCTION SIGN AND SUPPORTS
- REMOVE EXISTING PAVEMENT MARKINGS
- TYPICAL SIGN STANDARD (ROAD CLOSURE SIGN ASSEMBLY)
- STD. BARRICADE, TYPE III-B (REFLECTORIZED BOTH SIDES)
- DIRECTION OF TRAFFIC
- (73) TEMPORARY PAVEMENT MARKING, REMOVABLE, 4 IN (SOLID WHITE)
- (74) TEMPORARY PAVEMENT MARKING, REMOVABLE, 4 IN (SOLID YELLOW)
- (TCB) TEMPORARY TRAFFIC BARRIER, TYPE 2
- (CZ) ENERGY ABSORBING TERMINAL, CZ, TL-2

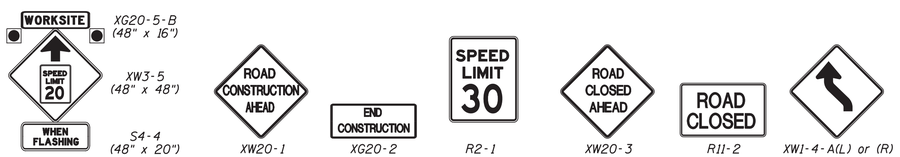

XG20-5-B (48" x 16")	XW3-5 (48" x 48")	S4-4 (48" x 20")	XW20-1	XG20-2	R2-1	XW20-3	R11-2	XW1-4-A(L) or (R)
78	89	94	95	96	97	98		

Notes:

- During Construction, All Existing Signs shall Remain in Place or, if Moved, Placed in an Appropriate Location as Near as Possible to their Original Locations, Unless Otherwise Directed.
- Access to Driveways & Approaches shall be Provided at All Times Unless Otherwise directed.
- No Two Adjacent Street Approaches shall be closed at the Same Time Unless Otherwise Directed.
- All Station Callouts From Line "PR-C-3" Unless Otherwise Indicated.

Construction Zone Design Speed: 30 MPH

Clark Dietz ENGINEERS

RECOMMENDED FOR APPROVAL	DESIGN ENGINEER	DATE	
DESIGNED: JAL	DRAWN: MP		
CHECKED: RBI	CHECKED: JAL		

INDIANA
DEPARTMENT OF TRANSPORTATION

MAINTENANCE OF TRAFFIC PHASE II
US 27

HORIZONTAL SCALE: 1" = 50'	BRIDGE FILE
VERTICAL SCALE: NONE	DESIGNATION: 0100701
SURVEY BOOK	SHEETS: 30 of 278
CONTRACT: R-30397	PROJECT: 0100701

12:08:36 PM8/26/2016 P:\10170190\Plans\MntOfTrf\MOT_US27_N_PH2_08.dgn

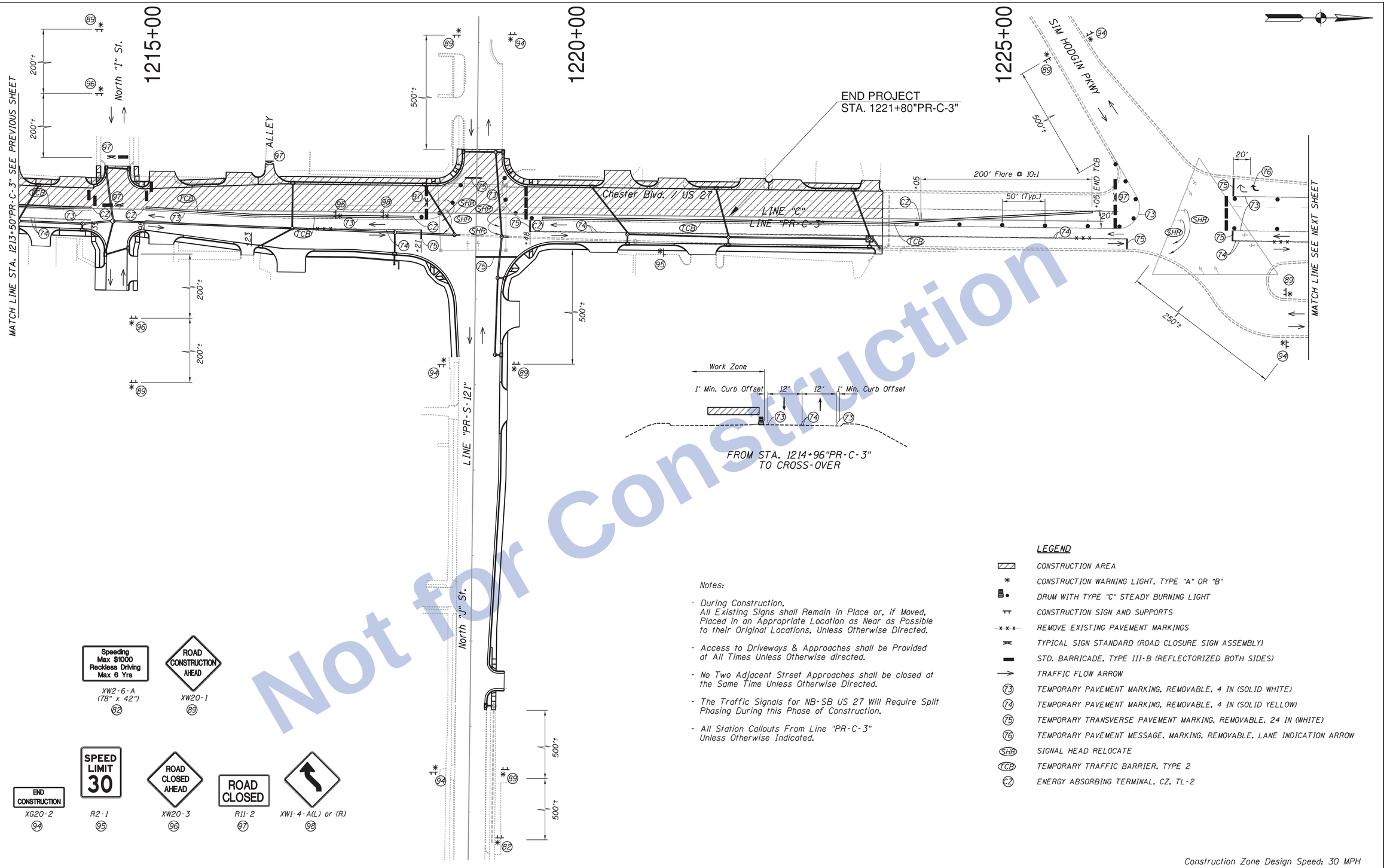

Not for Construction

Notes:

- During Construction.
  All Existing Signs shall Remain in Place or, if Moved, Placed in an Appropriate Location as Near as Possible to their Original Locations, Unless Otherwise Directed.
- Access to Driveways & Approaches shall be Provided at All Times Unless Otherwise directed.
- No Two Adjacent Street Approaches shall be closed at the Same Time Unless Otherwise Directed.
- The Traffic Signals for NB-SB US 27 Will Require Split Phasing During this Phase of Construction.
- All Station Callouts From Line "PR-C-3" Unless Otherwise Indicated.

LEGEND

- CONSTRUCTION AREA
- CONSTRUCTION WARNING LIGHT, TYPE "A" OR "B"
- DRUM WITH TYPE "C" STEADY BURNING LIGHT
- CONSTRUCTION SIGN AND SUPPORTS
- REMOVE EXISTING PAVEMENT MARKINGS
- TYPICAL SIGN STANDARD (ROAD CLOSURE SIGN ASSEMBLY)
- STD. BARRICADE, TYPE III-B (REFLECTORIZED BOTH SIDES)
- TRAFFIC FLOW ARROW
- 73 TEMPORARY PAVEMENT MARKING, REMOVABLE, 4 IN (SOLID WHITE)
- 74 TEMPORARY PAVEMENT MARKING, REMOVABLE, 4 IN (SOLID YELLOW)
- 75 TEMPORARY TRANSVERSE PAVEMENT MARKING, REMOVABLE, 24 IN (WHITE)
- 76 TEMPORARY PAVEMENT MESSAGE, MARKING, REMOVABLE, LANE INDICATION ARROW
- SHR SIGNAL HEAD RELOCATE
- TCB TEMPORARY TRAFFIC BARRIER, TYPE 2
- CZ ENERGY ABSORBING TERMINAL, CZ, TL-2

Construction Zone Design Speed: 30 MPH

Clark Dietz
ENGINEERS

RECOMMENDED FOR APPROVAL _____ DESIGN ENGINEER DATE

DESIGNED: JAL DRAWN: MP
CHECKED: RBI CHECKED: JAL

INDIANA
DEPARTMENT OF TRANSPORTATION

MAINTENANCE OF TRAFFIC PHASE II
US 27

HORIZONTAL SCALE	BRIDGE FILE
1" = 50'	
VERTICAL SCALE	DESIGNATION
NONE	0100701
SURVEY BOOK	SHEETS
	31 of 278
CONTRACT	PROJECT
R-30397	0100701

12:08:38 PM 8/26/2016 P:\0170190\Plans\MnlOTrf\MOT_US27_N_PH2_09.dgn

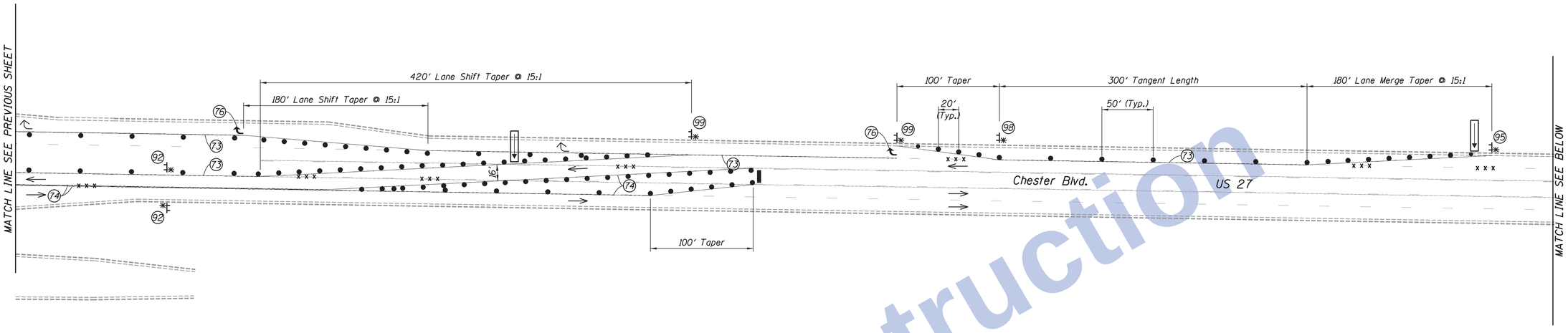

Notes:

- During Construction, All Existing Signs shall Remain in Place or, if Moved, Placed in an Appropriate Location as Near as Possible to their Original Locations, Unless Otherwise Directed.
- Access to Driveways & Approaches shall be Provided at All Times Unless Otherwise directed.

LEGEND

- CONSTRUCTION WARNING LIGHT, TYPE "A" OR "B"
- DRUM WITH TYPE "C" STEADY BURNING LIGHT
- CONSTRUCTION SIGN AND SUPPORTS
- REMOVE EXISTING PAVEMENT MARKINGS
- FLASHING ARROW SIGN (4'x8')
- STD. BARRICADE, TYPE III-B (REFLECTORIZED BOTH SIDES)
- DIRECTION OF TRAFFIC
- (73) TEMPORARY PAVEMENT MARKING, REMOVABLE, 4 IN (SOLID WHITE)
- (74) TEMPORARY PAVEMENT MARKING, REMOVABLE, 4 IN (SOLID YELLOW)
- (76) TEMPORARY PAVEMENT MESSAGE, MARKING, REMOVABLE, LANE INDICATION ARROW

Construction Zone Design Speed: 30 MPH

Not for Construction

Clark Dietz ENGINEERS

RECOMMENDED FOR APPROVAL	DESIGN ENGINEER	DATE	
DESIGNED: JAL	DRAWN: MP		
CHECKED: RBI	CHECKED: JAL		

INDIANA
DEPARTMENT OF TRANSPORTATION

MAINTENANCE OF TRAFFIC PHASE II
US 27

HORIZONTAL SCALE	BRIDGE FILE
1" = 50'	
VERTICAL SCALE	DESIGNATION
NONE	0100701
SURVEY BOOK	SHEETS
	32 of 278
CONTRACT	PROJECT
R-30397	0100701

12:08:41 PM8/26/2016 P:\10170190\Plans\MnOTrf\MOT_US27_N_PH2_10.dgn

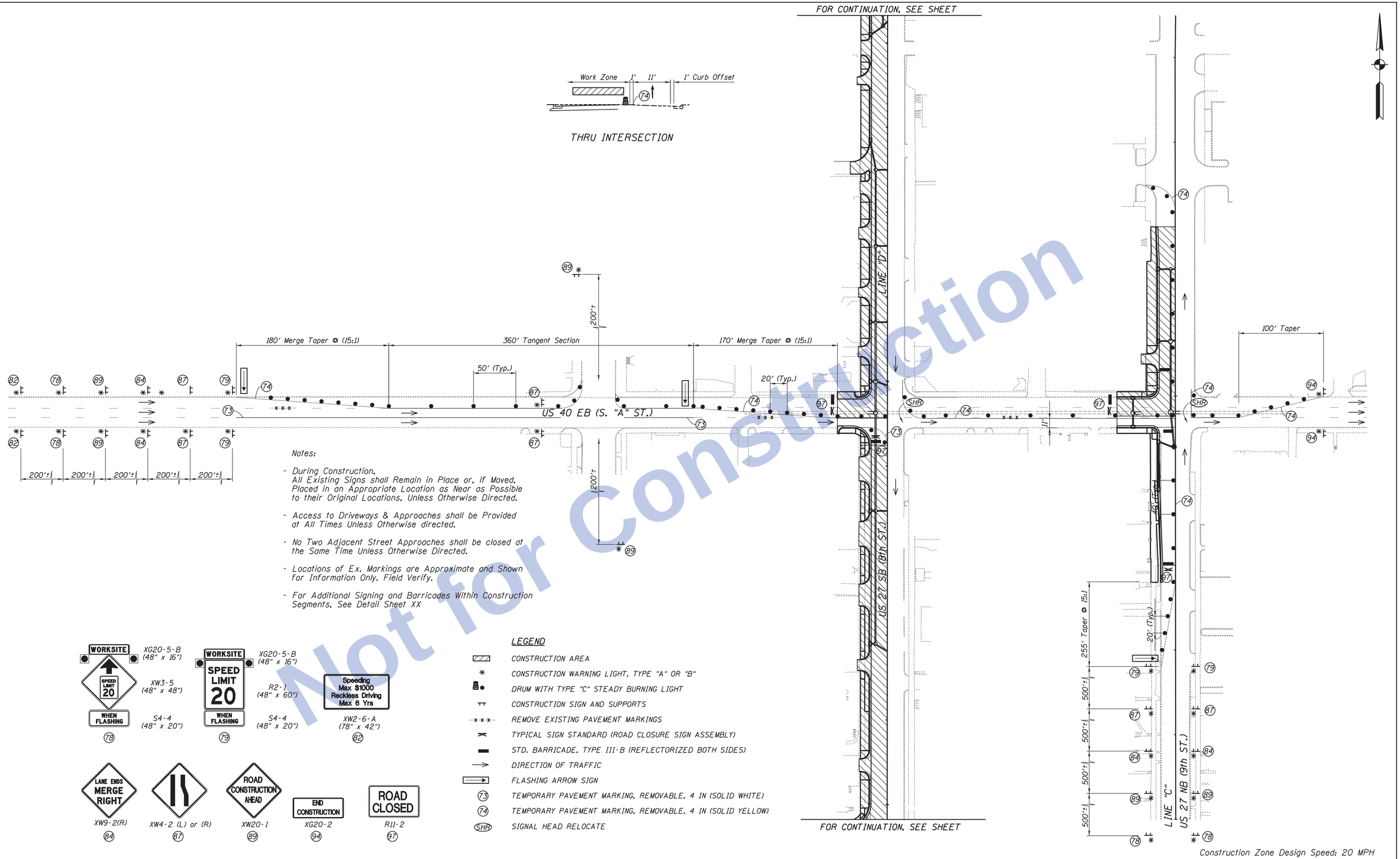

Notes:

- During Construction. All Existing Signs shall Remain in Place or, if Moved, Placed in an Appropriate Location as Near as Possible to their Original Locations, Unless Otherwise Directed.
- Access to Driveways & Approaches shall be Provided at All Times Unless Otherwise directed.
- No Two Adjacent Street Approaches shall be closed at the Same Time Unless Otherwise Directed.
- Locations of Ex. Markings are Approximate and Shown for Information Only. Field Verify.
- For Additional Signing and Barricades Within Construction Segments, See Detail Sheet XX

LEGEND

	CONSTRUCTION AREA
✳	CONSTRUCTION WARNING LIGHT, TYPE "A" OR "B"
	DRUM WITH TYPE "C" STEADY BURNING LIGHT
	CONSTRUCTION SIGN AND SUPPORTS
x x x	REMOVE EXISTING PAVEMENT MARKINGS
	TYPICAL SIGN STANDARD (ROAD CLOSURE SIGN ASSEMBLY)
	STD. BARRICADE, TYPE III-B (REFLECTORIZED BOTH SIDES)
→	DIRECTION OF TRAFFIC
	FLASHING ARROW SIGN
73	TEMPORARY PAVEMENT MARKING, REMOVABLE, 4 IN (SOLID WHITE)
74	TEMPORARY PAVEMENT MARKING, REMOVABLE, 4 IN (SOLID YELLOW)
SHR	SIGNAL HEAD RELOCATE

Construction Zone Design Speed: 20 MPH

Not for Construction

Clark Dietz ENGINEERS

RECOMMENDED FOR APPROVAL _____ DESIGN ENGINEER DATE

DESIGNED: JAL DRAWN: MP
CHECKED: RBI CHECKED: JAL

INDIANA DEPARTMENT OF TRANSPORTATION

MAINTENANCE OF TRAFFIC PHASE II
US 27

HORIZONTAL SCALE	BRIDGE FILE
1" = 50'	
VERTICAL SCALE	DESIGNATION
NONE	0100701
SURVEY BOOK	SHEETS
	33 of 278
CONTRACT	PROJECT
R-30397	0100701

12:08:43 PM 8/26/2016 P:\0170190\Plans\Mnt\Ffr\MOT_US27_N_PH2_11_EB40_N_01.dgn

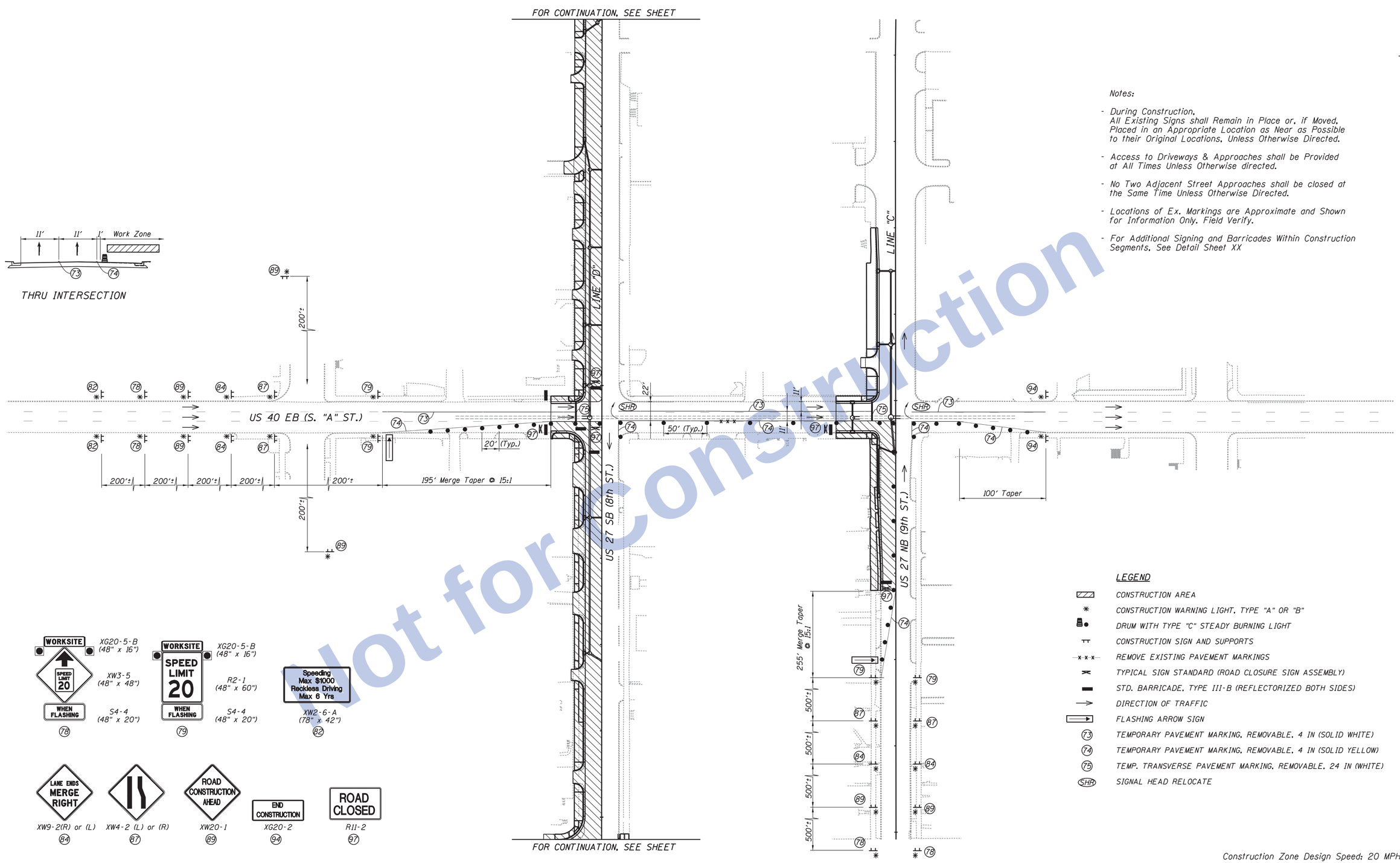

Notes:

- During Construction, All Existing Signs shall Remain in Place or, if Moved, Placed in an Appropriate Location as Near as Possible to their Original Locations, Unless Otherwise Directed.
- Access to Driveways & Approaches shall be Provided at All Times Unless Otherwise directed.
- No Two Adjacent Street Approaches shall be closed at the Same Time Unless Otherwise Directed.
- Locations of Ex. Markings are Approximate and Shown for Information Only. Field Verify.
- For Additional Signing and Barricades Within Construction Segments, See Detail Sheet XX

LEGEND

- CONSTRUCTION AREA
- CONSTRUCTION WARNING LIGHT, TYPE "A" OR "B"
- DRUM WITH TYPE "C" STEADY BURNING LIGHT
- CONSTRUCTION SIGN AND SUPPORTS
- REMOVE EXISTING PAVEMENT MARKINGS
- TYPICAL SIGN STANDARD (ROAD CLOSURE SIGN ASSEMBLY)
- STD. BARRICADE, TYPE III-B (REFLECTORIZED BOTH SIDES)
- DIRECTION OF TRAFFIC
- FLASHING ARROW SIGN
- 73 TEMPORARY PAVEMENT MARKING, REMOVABLE, 4 IN (SOLID WHITE)
- 74 TEMPORARY PAVEMENT MARKING, REMOVABLE, 4 IN (SOLID YELLOW)
- 75 TEMP. TRANSVERSE PAVEMENT MARKING, REMOVABLE, 24 IN (WHITE)
- SHR SIGNAL HEAD RELOCATE

Construction Zone Design Speed: 20 MPH

Plot for Construction

Clark Dietz ENGINEERS

RECOMMENDED FOR APPROVAL _____ DESIGN ENGINEER DATE

DESIGNED: JAL DRAWN: MP
CHECKED: RBI CHECKED: JAL

INDIANA DEPARTMENT OF TRANSPORTATION

MAINTENANCE OF TRAFFIC PHASE II
US 27

HORIZONTAL SCALE	BRIDGE FILE
1" = 50'	
VERTICAL SCALE	DESIGNATION
NONE	0100701
SURVEY BOOK	SHEETS
	34 of 278
CONTRACT	PROJECT
R-30397	0100701

12:08:45 PM 8/26/2016 P:\0170190\Plans\Mnt\Trf\MOT_US27_N_PH2_12_EB40_S_02.dgn

Notes:

- During Construction, All Existing Signs shall Remain in Place or, if Moved, Placed in an Appropriate Location as Near as Possible to their Original Locations, Unless Otherwise Directed.
- Access to Driveways & Approaches shall be Provided at All Times Unless Otherwise directed.
- No Two Adjacent Street Approaches shall be closed at the Same Time Unless Otherwise Directed.
- All Station Callouts From Line "C" Unless Otherwise Indicated.

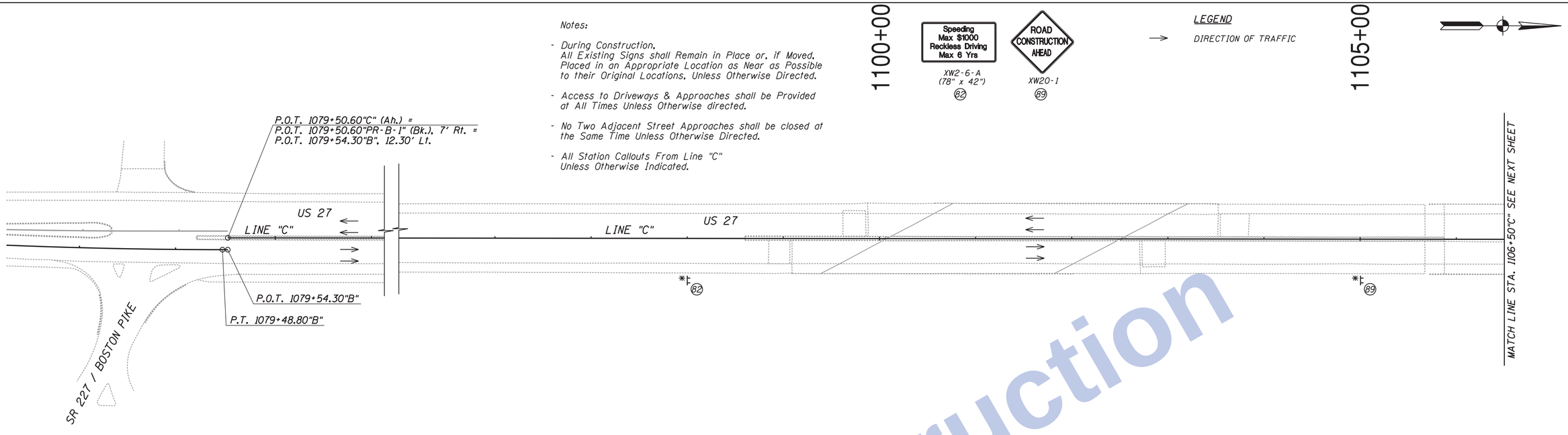

Not for Construction

PAY ITEMS - PHASE IIIA	QUANTITY												
PAY ITEMS	SHEET 35	SHEET 36	SHEET 37	SHEET 38	SHEET 39	SHEET 40	SHEET 41	SHEET 42	SHEET 43	SHEET 44	SHEET 45	TOTAL	UNIT
TEMPORARY WORKSITE SPEED LIMIT SIGN ASSEMBLY	0	2	2	0	2	4	2	1	2	0	4	19	EA
DETOUR ROUTE MARKER ASSEMBLY	0	0	0	0	0	0	5	0	0	0	0	5	EA
CONTROLLER, RESET TIMING	0	0	0	0	0	2	0	0	2	0	4	8	EA
CONSTRUCTION SIGN, C	1	0	0	0	0	0	0	0	1	1	2	5	EA
ROAD CLOSURE SIGN ASSEMBLY	0	6	4	5	2	5	5	2	5	0	1	35	EA
ENERGY ABSORBING TERMINAL, CZ, TL-Z	0	0	0	0	0	0	0	0	0	0	0	0	EA
TEMP. PAVEMENT MARKING, REMOVABLE, 4 IN (YELLOW)	0	240	0	0	0	105	2,460	2,820	2,386	1,672	945	10,628	LFT
TEMP. PAVEMENT MARKING, REMOVABLE, 4 IN (WHITE)	0	1,637	1,500	1,500	1,500	1,538	2,195	0	1,851	1,838	2,910	16,469	LFT
TEMP. PAVEMENT MESSAGE MARKING, REMOVABLE, LANE INDICATION ARROW	0	0	0	1	0	0	0	0	1	1	0	3	EA
TEMP. TRANSVERSE PAVEMENT MARKING, REMOVABLE, 24 IN	0	0	0	0	0	0	15	0	110	0	0	125	LFT
CONSTRUCTION SIGN, A	1	14	10	14	4	18	14	9	13	9	14	120	EA
CONSTRUCTION SIGN, B	0	0	0	0	0	0	1	2	4	1	0	8	EA
FLASHING ARROW SIGN	0	90	0	0	0	90	180	0	30	180	135	705	DAY
BARRICADE, III-B	0	144	96	108	60	168	192	72	312	0	36	1,188	LFT
TEMP. TRAFFIC BARRIER, TYPE 2	0	0	0	0	0	0	0	200	0	0	0	200	LFT
SIGNAL HEAD, RELOCATE	0	0	0	0	0	0	0	0	7	0	4	11	EA
LINE, REMOVE	0	0	0	100	0	0	0	0	1,190	940	1,475	3,705	LFT

SIGN IDENTIFICATION TABLE - PHASE IIIA			QUANTITY										
SIGN CODE	MESSAGE	TYPE	SHEET 35	SHEET 36	SHEET 37	SHEET 38	SHEET 39	SHEET 40	SHEET 41	SHEET 42	SHEET 43	SHEET 44	SHEET 45
R1-1	STOP	B	0	0	0	0	0	0	1	0	0	0	0
R2-1("30")	SPEED LIMIT 30	B	0	0	0	0	0	0	0	2	3	0	0
R3-7	RIGHT LANE MUST TURN RIGHT	B	0	0	0	0	0	0	0	0	1	1	0
XG20-1	ROAD CONSTRUCTION NEXT __ MILES	A	0	0	0	0	0	0	0	0	0	1	0
XG20-2	END CONSTRUCTION	A	0	7	5	6	2	6	4	2	6	1	2
XW2-6-A	WORKSITE ADDED PENALTY SIGNS	C	1	0	0	0	0	0	0	0	0	1	2
XW103-1	WATCH FOR STOPPED TRAFFIC	A	0	0	0	0	0	0	0	0	0	1	0
XW1-4-A	REVERSE CURVE SYMBOL	A	0	1	0	0	0	0	1	0	0	1	4
XW20-1	ROAD CONSTRUCTION AHEAD	A	1	3	3	5	1	5	5	5	5	1	4
XW20-3	ROAD CLOSED AHEAD	A	0	3	2	3	1	1	3	2	1	0	0
XW20-5	(RIGHT) OR (LEFT) LANE CLOSED AHEAD	A	0	0	0	0	0	2	0	0	0	1	0
XW3-5(30)	ARROW - "SPEED LIMIT 30"	A	0	0	0	0	0	0	0	0	0	1	0
XW4-2	LANE ENDS MERGE (RIGHT) OR (LEFT) [SYMBOL]	A	0	0	0	0	0	2	0	0	0	1	2
XW6-3-B	TWO WAY TRAFFIC SYMBOL	A	0	0	0	0	0	0	1	0	0	0	0
XW9-2	LANE ENDS MERGE (RIGHT) OR (LEFT)	A	0	0	0	0	0	2	0	0	0	1	2
Subtotal	Construction Sign, Type A	119	1	14	10	14	4	18	14	9	12	9	14
Subtotal	Construction Sign, Type B	8	0	0	0	0	0	0	1	2	4	1	0
Subtotal	Construction Sign, Type C	4	1	0	0	0	0	0	0	0	0	1	2

Clark Dietz ENGINEERS

RECOMMENDED FOR APPROVAL _____ DESIGN ENGINEER DATE

DESIGNED: JAL DRAWN: MP
CHECKED: RBI CHECKED: JAL

INDIANA DEPARTMENT OF TRANSPORTATION

MAINTENANCE OF TRAFFIC PHASE IIIA
US 27

HORIZONTAL SCALE	BRIDGE FILE
1" = 50'	
VERTICAL SCALE	DESIGNATION
NONE	0100701
SURVEY BOOK	SHEETS
	35 of 278
CONTRACT	PROJECT
R-30397	0100701

12:08:48 PM 8/26/2016 P:\0170190\Plans\Mnt0Tr\MOT_US27_N_PH3A_01.dgn

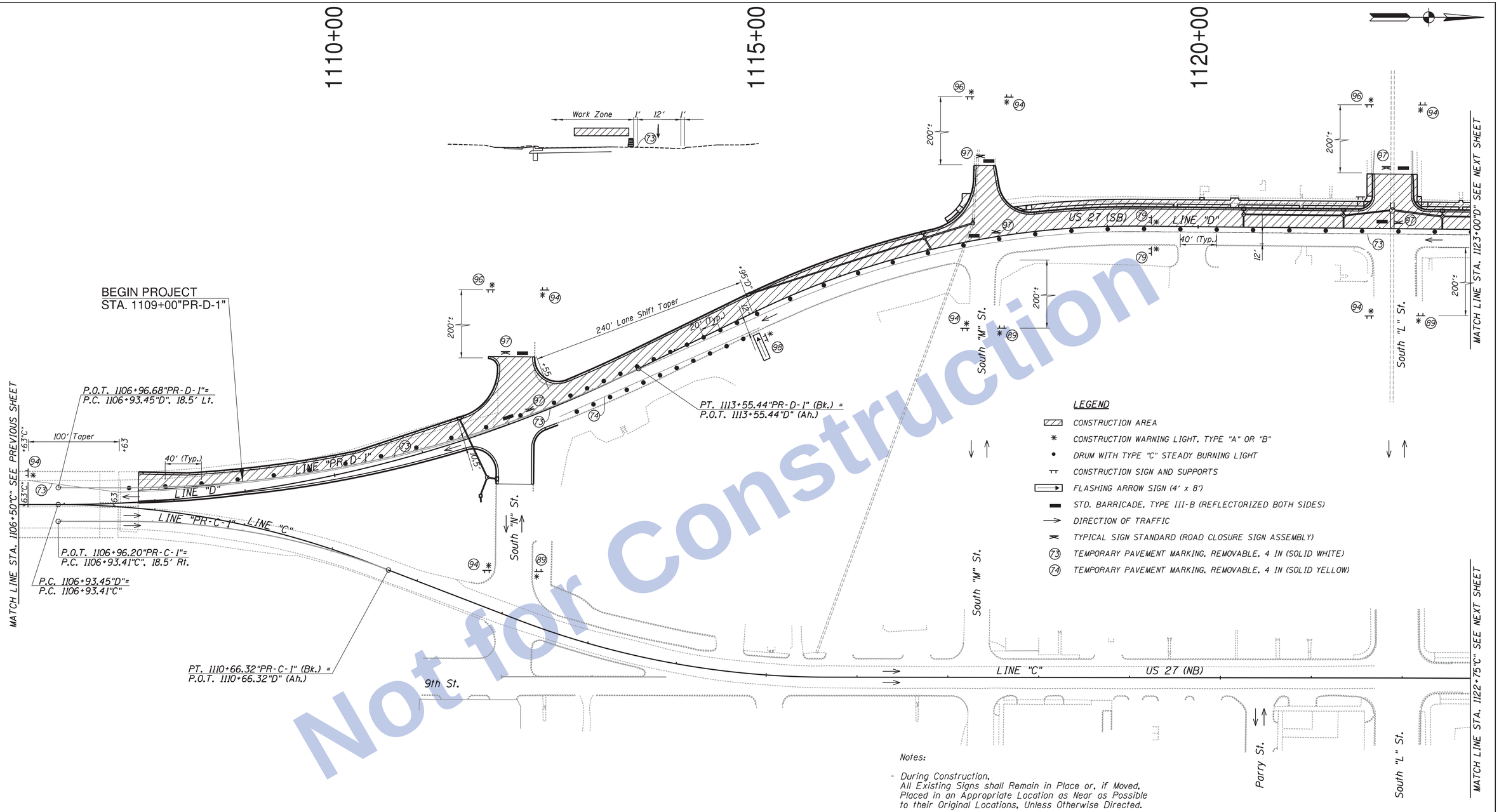

Not for Construction

Notes:

- During Construction, All Existing Signs shall Remain in Place or, if Moved, Placed in an Appropriate Location as Near as Possible to their Original Locations, Unless Otherwise Directed.
- Access to Driveways & Approaches shall be Provided at All Times Unless Otherwise directed.
- No Two Adjacent Street Approaches shall be closed at the Same Time Unless Otherwise Directed.
- All Station Callouts From Line "PR-D-1" Unless Otherwise Indicated.

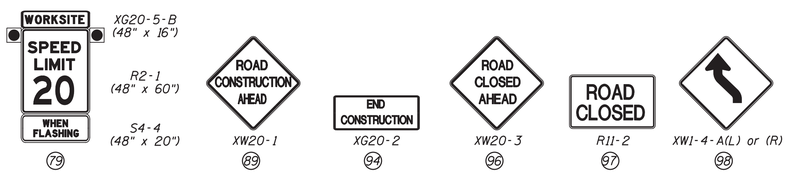

Construction Zone Design Speed: 20 MPH

Clark Dietz ENGINEERS

RECOMMENDED FOR APPROVAL _____ DESIGN ENGINEER DATE	INDIANA DEPARTMENT OF TRANSPORTATION	HORIZONTAL SCALE 1" = 50'	BRIDGE FILE
		VERTICAL SCALE NONE	DESIGNATION 0100701
DESIGNED: JAL / DRAWN: MP	MAINTENANCE OF TRAFFIC PHASE IIIA US 27	SURVEY BOOK	SHEETS 36 of 278
CHECKED: RBI / CHECKED: JAL		CONTRACT R-30397	PROJECT 0100701

12:08:51 PM 8/26/2016 P:\0170190\Plans\Wet01fr1\WOT_US27_N_PH3A_02.dgn

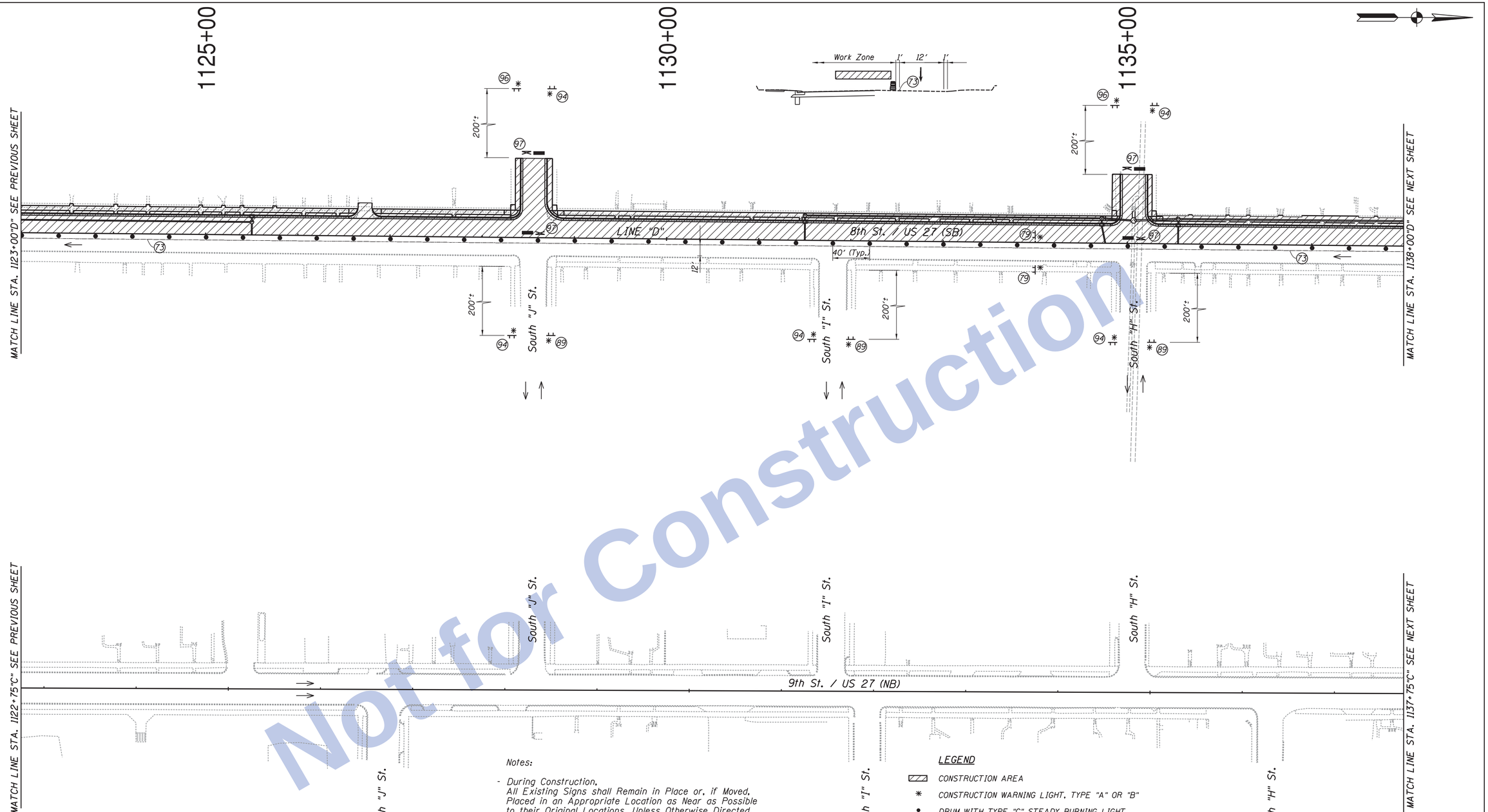

Not for Construction

WORKSITE
SPEED LIMIT 20
WHEN FLASHING
79

XG20-5-B (48" x 16")
R2-1 (48" x 60")
S4-4 (48" x 20")

ROAD CONSTRUCTION AHEAD
XW20-1
89

END CONSTRUCTION
XG20-2
94

ROAD CLOSED AHEAD
XW20-3
96

ROAD CLOSED
R11-2
97

Notes:

- During Construction. All Existing Signs shall Remain in Place or, if Moved, Placed in an Appropriate Location as Near as Possible to their Original Locations, Unless Otherwise Directed.
- Access to Driveways & Approaches shall be Provided at All Times Unless Otherwise directed.
- No Two Adjacent Street Approaches shall be closed at the Same Time Unless Otherwise Directed.
- All Station Callouts From Line "D" Unless Otherwise Indicated.

LEGEND

- CONSTRUCTION AREA
- CONSTRUCTION WARNING LIGHT, TYPE "A" OR "B"
- DRUM WITH TYPE "C" STEADY BURNING LIGHT
- CONSTRUCTION SIGN AND SUPPORTS
- STD. BARRICADE, TYPE III-B (REFLECTORIZED BOTH SIDES)
- DIRECTION OF TRAFFIC
- TYPICAL SIGN STANDARD (ROAD CLOSURE SIGN ASSEMBLY)
- 73 TEMPORARY PAVEMENT MARKING, REMOVABLE, 4 IN (SOLID WHITE)

Construction Zone Design Speed: 20 MPH

Clark Dietz ENGINEERS

RECOMMENDED FOR APPROVAL _____ DESIGN ENGINEER DATE

DESIGNED: JAL DRAWN: MP
CHECKED: RBI CHECKED: JAL

INDIANA DEPARTMENT OF TRANSPORTATION

MAINTENANCE OF TRAFFIC PHASE IIIA
US 27

HORIZONTAL SCALE	BRIDGE FILE
1" = 50'	
VERTICAL SCALE	DESIGNATION
NONE	0100701
SURVEY BOOK	SHEETS
	37 of 278
CONTRACT	PROJECT
R-30397	0100701

12:08:53 PM 8/26/2016 P:\0170190\Plans\Wet01fr1\WOT_US27_N_PH3A_03.dgn

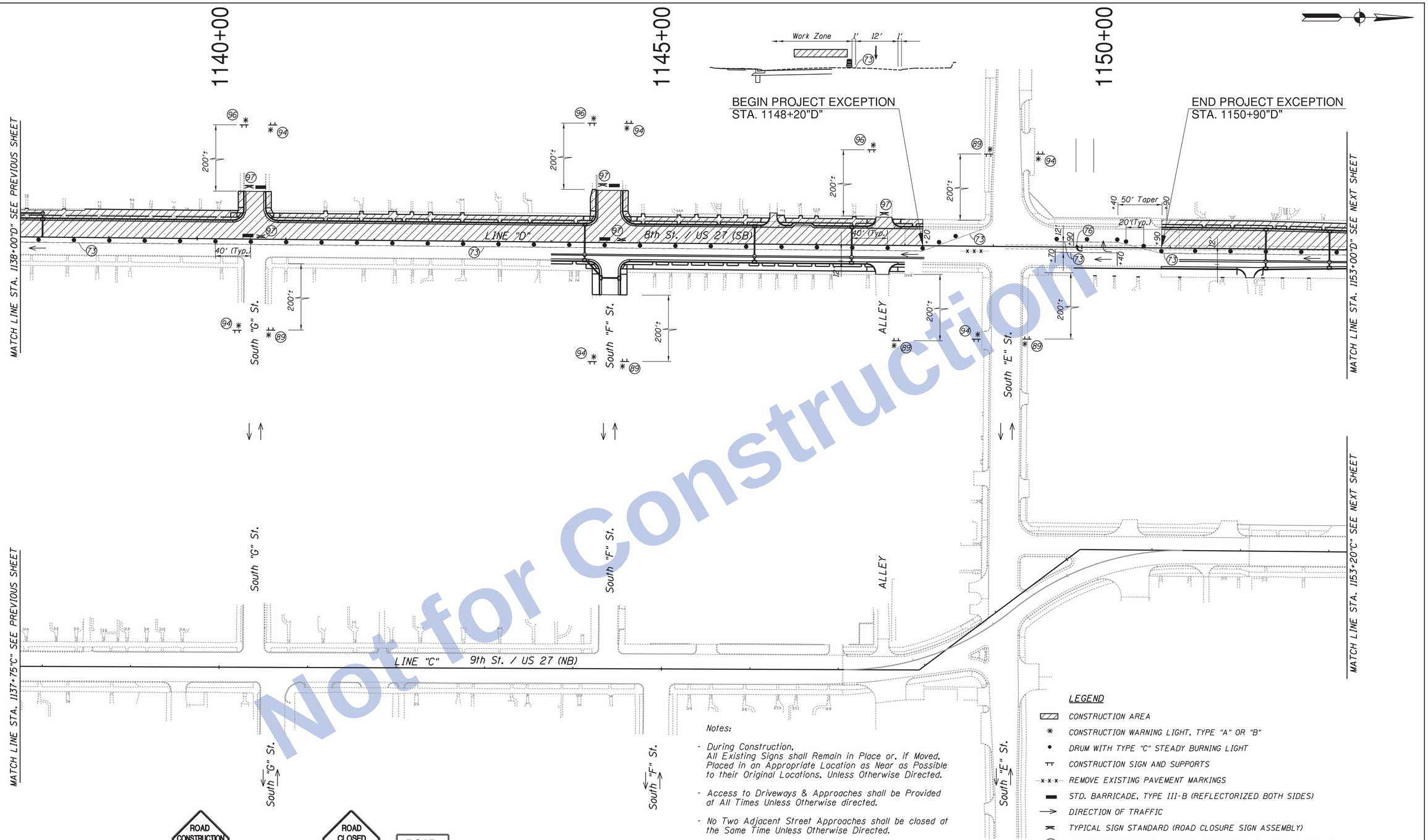

Not for Construction

ROAD CONSTRUCTION AHEAD
XW20-1
89

END CONSTRUCTION
XG20-2
94

ROAD CLOSED AHEAD
XW20-3
96

ROAD CLOSED
R11-2
97

Notes:

- During Construction, All Existing Signs shall Remain in Place or, if Moved, Placed in an Appropriate Location as Near as Possible to their Original Locations, Unless Otherwise Directed.
- Access to Driveways & Approaches shall be Provided at All Times Unless Otherwise directed.
- No Two Adjacent Street Approaches shall be closed at the Same Time Unless Otherwise Directed.
- All Station Callouts From Line "D" Unless Otherwise Indicated.

LEGEND

- CONSTRUCTION AREA
- CONSTRUCTION WARNING LIGHT, TYPE "A" OR "B"
- DRUM WITH TYPE "C" STEADY BURNING LIGHT
- CONSTRUCTION SIGN AND SUPPORTS
- REMOVE EXISTING PAVEMENT MARKINGS
- STD. BARRICADE, TYPE III-B (REFLECTORIZED BOTH SIDES)
- DIRECTION OF TRAFFIC
- TYPICAL SIGN STANDARD (ROAD CLOSURE SIGN ASSEMBLY)
- (73) TEMPORARY PAVEMENT MARKING, REMOVABLE, 4 IN (SOLID WHITE)
- (76) TEMPORARY PAVEMENT MESSAGE, MARKING, REMOVABLE, LANE INDICATION ARROW

Construction Zone Design Speed: 20 MPH

Clark Dietz
ENGINEERS

RECOMMENDED FOR APPROVAL _____ DESIGN ENGINEER DATE

DESIGNED: JAL | DRAWN: MP
CHECKED: RBI | CHECKED: JAL

INDIANA
DEPARTMENT OF TRANSPORTATION

MAINTENANCE OF TRAFFIC PHASE IIIA
US 27

HORIZONTAL SCALE	BRIDGE FILE
1" = 50'	
VERTICAL SCALE	DESIGNATION
NONE	0100701
SURVEY BOOK	SHEETS
	38 of 278
CONTRACT	PROJECT
R-30397	0100701

12:08:55 PM 8/26/2016 P:\0170190\Plans\Mnt\Trf\MOT_US27_IL_PH3A_04.dgn

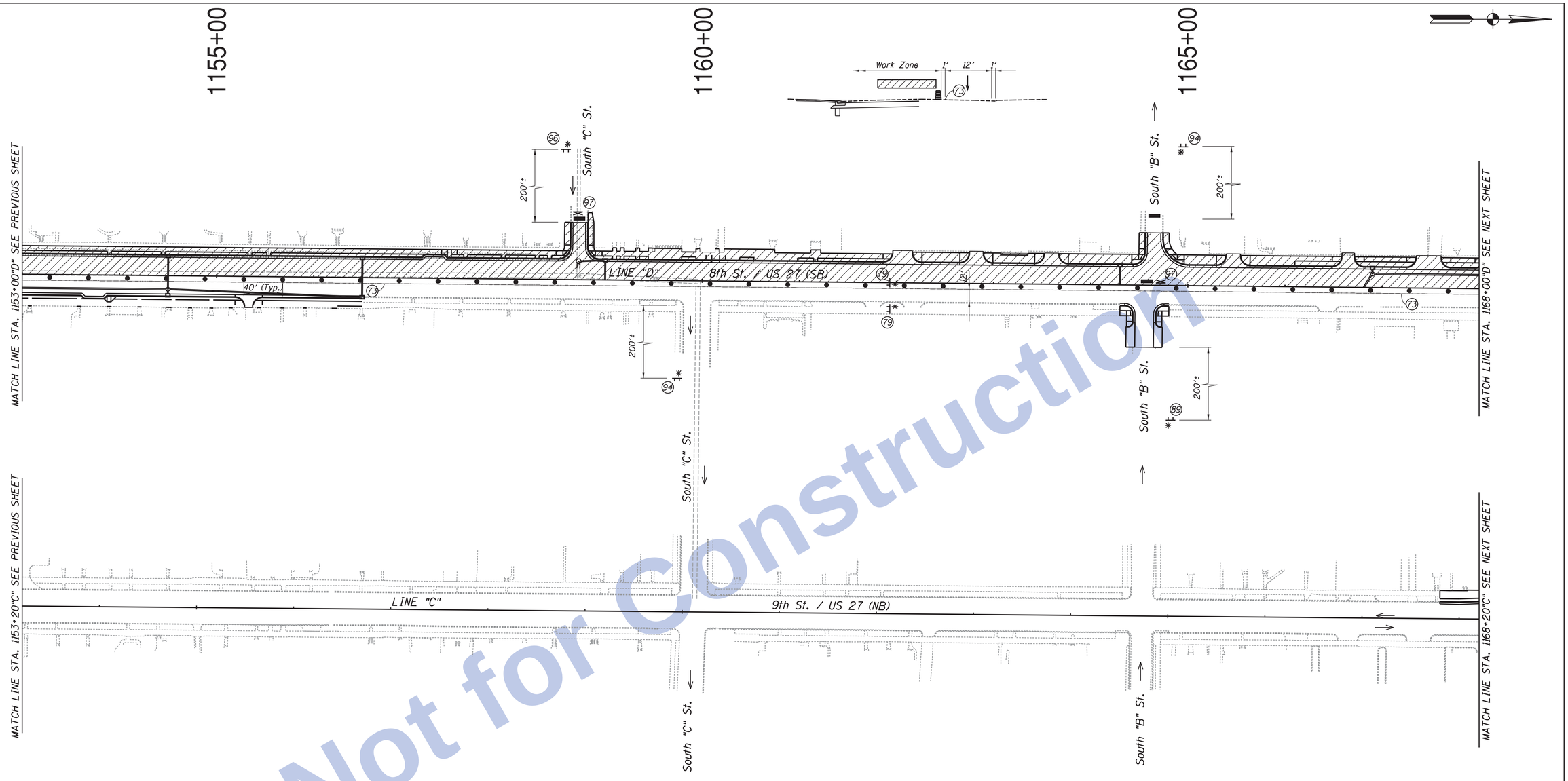

Not for Construction

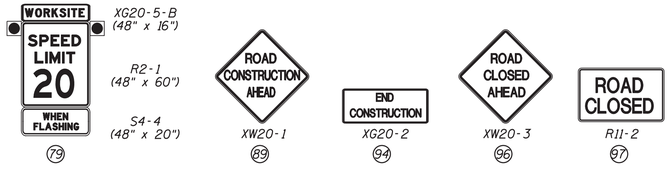

Notes:

- During Construction, All Existing Signs shall Remain in Place or, if Moved, Placed in an Appropriate Location as Near as Possible to their Original Locations, Unless Otherwise Directed.
- Access to Driveways & Approaches shall be Provided at All Times Unless Otherwise directed.
- No Two Adjacent Street Approaches shall be closed at the Same Time Unless Otherwise Directed.
- All Station Callouts From Line "D" Unless Otherwise Indicated.

LEGEND

- CONSTRUCTION AREA
- CONSTRUCTION WARNING LIGHT, TYPE "A" OR "B"
- DRUM WITH TYPE "C" STEADY BURNING LIGHT
- CONSTRUCTION SIGN AND SUPPORTS
- STD. BARRICADE, TYPE III-B (REFLECTORIZED BOTH SIDES)
- DIRECTION OF TRAFFIC
- TYPICAL SIGN STANDARD (ROAD CLOSURE SIGN ASSEMBLY)
- 73 TEMPORARY PAVEMENT MARKING, REMOVABLE, 4 IN (SOLID WHITE)

Construction Zone Design Speed: 20 MPH

Clark Dietz ENGINEERS

RECOMMENDED FOR APPROVAL ____ DESIGN ENGINEER DATE	INDIANA DEPARTMENT OF TRANSPORTATION	HORIZONTAL SCALE 1" = 50'	BRIDGE FILE
		VERTICAL SCALE NONE	DESIGNATION 0100701
DESIGNED: JAL / DRAWN: MP	MAINTENANCE OF TRAFFIC PHASE IIIA US 27	SURVEY BOOK	SHEETS 39 of 278
CHECKED: RBI / CHECKED: JAL		CONTRACT R-30397	PROJECT 0100701

12:08:57 PM8/26/2016 P:\10170190\Plans\MnOfTrf\MOT_US27_N_PH3A_05.dgn

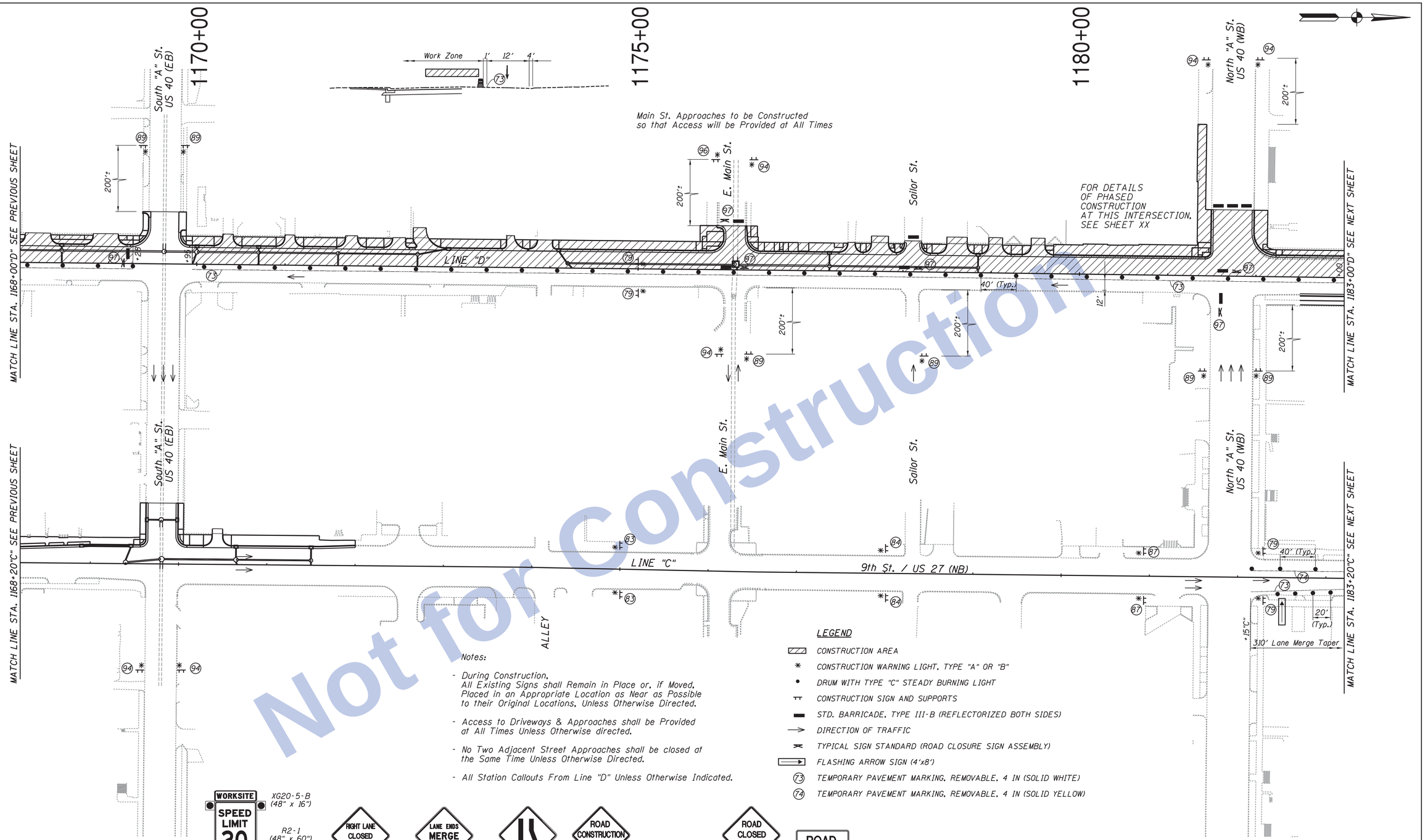

Notes:

- During Construction, All Existing Signs shall Remain in Place or, if Moved, Placed in an Appropriate Location as Near as Possible to their Original Locations, Unless Otherwise Directed.
- Access to Driveways & Approaches shall be Provided at All Times Unless Otherwise directed.
- No Two Adjacent Street Approaches shall be closed at the Same Time Unless Otherwise Directed.
- All Station Callouts From Line "D" Unless Otherwise Indicated.

LEGEND

- CONSTRUCTION AREA
- CONSTRUCTION WARNING LIGHT, TYPE "A" OR "B"
- DRUM WITH TYPE "C" STEADY BURNING LIGHT
- CONSTRUCTION SIGN AND SUPPORTS
- STD. BARRICADE, TYPE III-B (REFLECTORIZED BOTH SIDES)
- DIRECTION OF TRAFFIC
- TYPICAL SIGN STANDARD (ROAD CLOSURE SIGN ASSEMBLY)
- FLASHING ARROW SIGN (4'x8')
- (73) TEMPORARY PAVEMENT MARKING, REMOVABLE, 4 IN (SOLID WHITE)
- (74) TEMPORARY PAVEMENT MARKING, REMOVABLE, 4 IN (SOLID YELLOW)

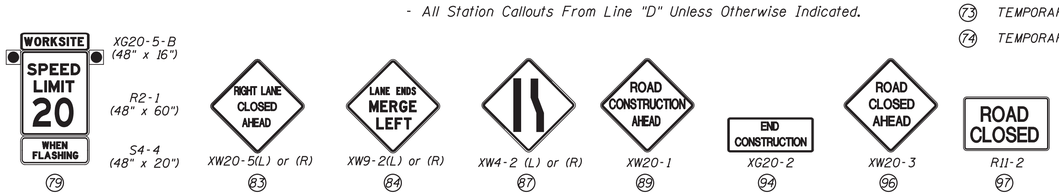

Construction Zone Design Speed: 20 MPH

Not for Construction

Clark Dietz
ENGINEERS

RECOMMENDED FOR APPROVAL _____ DESIGN ENGINEER DATE

DESIGNED: JAL DRAWN: MP
CHECKED: RBI CHECKED: JAL

INDIANA
DEPARTMENT OF TRANSPORTATION

MAINTENANCE OF TRAFFIC PHASE IIIA
US 27

HORIZONTAL SCALE	BRIDGE FILE
1" = 50'	
VERTICAL SCALE	DESIGNATION
NONE	0100701
SURVEY BOOK	SHEETS
	40 of 278
CONTRACT	PROJECT
R-30397	0100701

12:08:59 PM 8/26/2016 P:\0170190\Plans\Mn10Trf\MOT_US27_N_PH3A_06.dgn

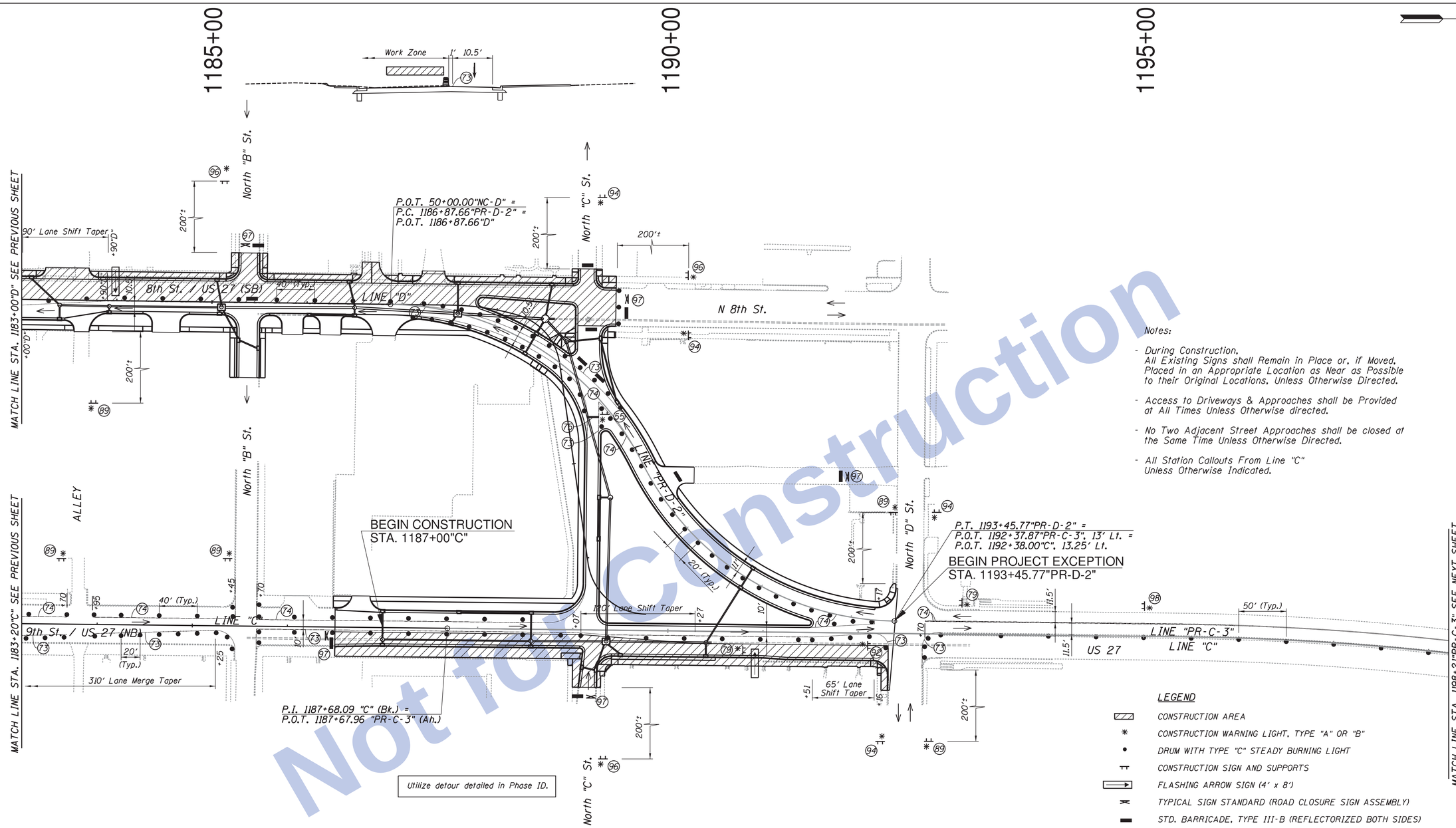

Notes:

- During Construction.
  All Existing Signs shall Remain in Place or, if Moved, Placed in an Appropriate Location as Near as Possible to their Original Locations, Unless Otherwise Directed.
- Access to Driveways & Approaches shall be Provided at All Times Unless Otherwise directed.
- No Two Adjacent Street Approaches shall be closed at the Same Time Unless Otherwise Directed.
- All Station Callouts From Line "C" Unless Otherwise Indicated.

LEGEND

- CONSTRUCTION AREA
- CONSTRUCTION WARNING LIGHT, TYPE "A" OR "B"
- DRUM WITH TYPE "C" STEADY BURNING LIGHT
- CONSTRUCTION SIGN AND SUPPORTS
- FLASHING ARROW SIGN (4' x 8')
- TYPICAL SIGN STANDARD (ROAD CLOSURE SIGN ASSEMBLY)
- STD. BARRICADE, TYPE III-B (REFLECTORIZED BOTH SIDES)
- DIRECTION OF TRAFFIC
- (73) TEMPORARY PAVEMENT MARKING, REMOVABLE, 4 IN (SOLID WHITE)
- (74) TEMPORARY PAVEMENT MARKING, REMOVABLE, 4 IN (SOLID YELLOW)
- (75) TEMPORARY TRANSVERSE PAVEMENT MARKING, REMOVABLE, 24 IN (WHITE)

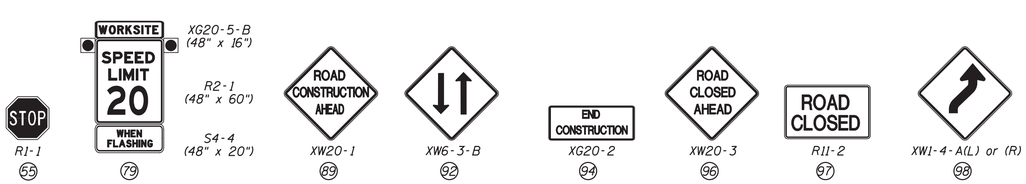

Construction Zone Design Speed: 20 MPH

Not for Construction

Clark Dietz
ENGINEERS

RECOMMENDED FOR APPROVAL _____ DESIGN ENGINEER DATE

DESIGNED: JAL DRAWN: MP
CHECKED: RBI CHECKED: JAL

INDIANA
DEPARTMENT OF TRANSPORTATION

MAINTENANCE OF TRAFFIC PHASE IIIA
US 27

HORIZONTAL SCALE	BRIDGE FILE
1" = 50'	
VERTICAL SCALE	DESIGNATION
NONE	0100701
SURVEY BOOK	SHEETS
	41 of 278
CONTRACT	PROJECT
R-30397	0100701

12:09:01 PM 8/26/2016 P:\0170190\Plans\MntOfTrf\MOT_US27_IL_PH3A_07.dgn

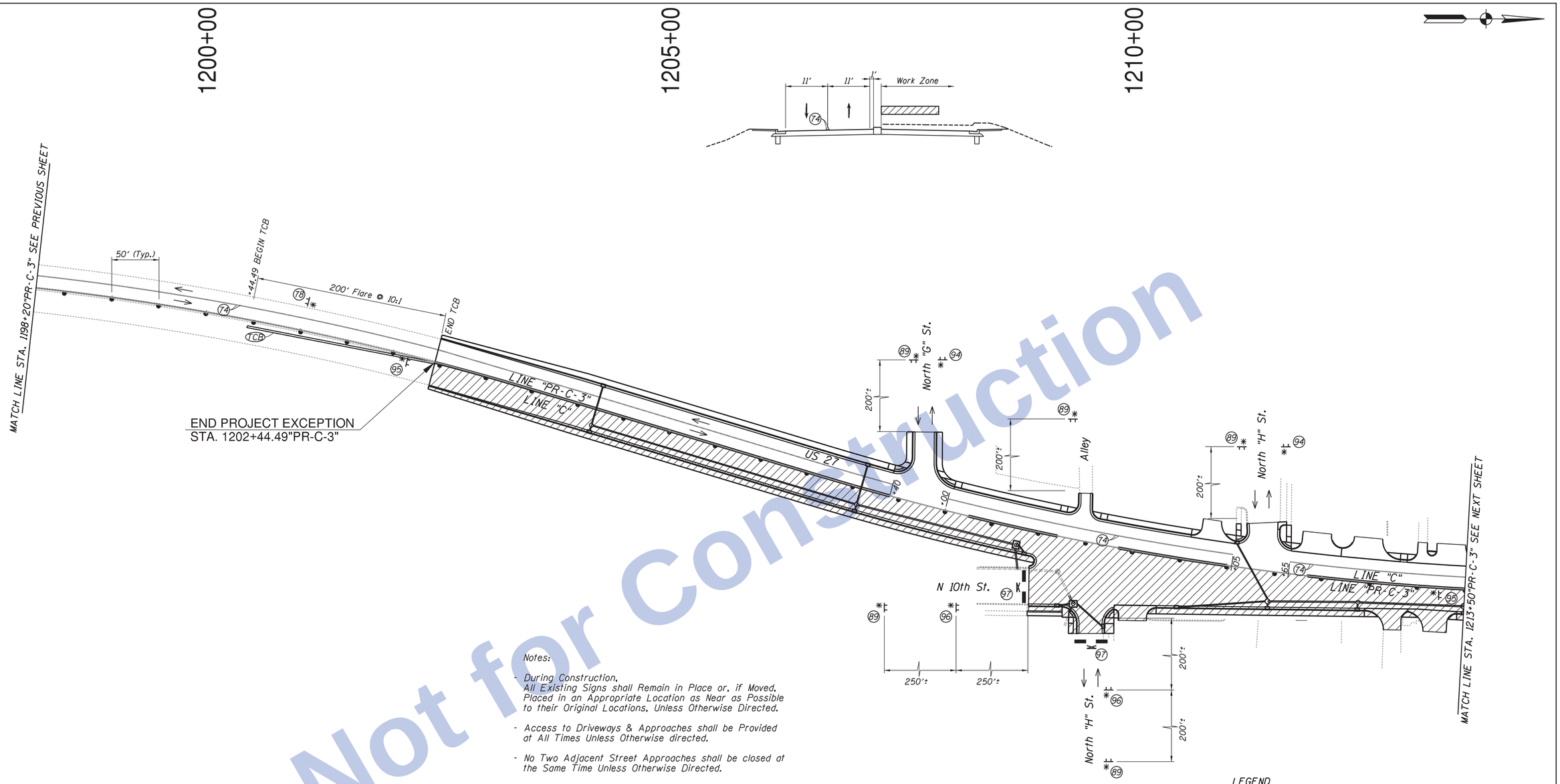

Notes:

- During Construction, All Existing Signs shall Remain in Place or, if Moved, Placed in an Appropriate Location as Near as Possible to their Original Locations, Unless Otherwise Directed.
- Access to Driveways & Approaches shall be Provided at All Times Unless Otherwise directed.
- No Two Adjacent Street Approaches shall be closed at the Same Time Unless Otherwise Directed.
- All Station Callouts From Line "PR-C-3" Unless Otherwise Indicated.

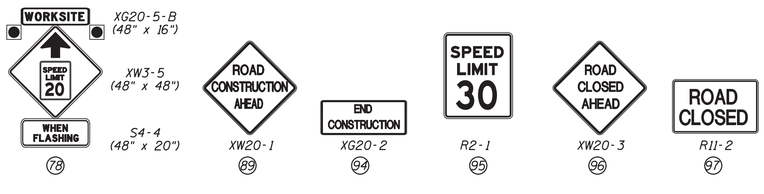

LEGEND

- CONSTRUCTION AREA
- CONSTRUCTION WARNING LIGHT, TYPE "A" OR "B"
- DRUM WITH TYPE "C" STEADY BURNING LIGHT
- CONSTRUCTION SIGN AND SUPPORTS
- TYPICAL SIGN STANDARD (ROAD CLOSURE SIGN ASSEMBLY)
- STD. BARRICADE, TYPE III-B (REFLECTORIZED BOTH SIDES)
- DIRECTION OF TRAFFIC
- (74) TEMPORARY PAVEMENT MARKING, REMOVABLE, 4 IN (SOLID YELLOW)
- (TCB) TEMPORARY TRAFFIC BARRIER, TYPE 2

Construction Zone Design Speed: 30 MPH

Not for Construction

Clark Dietz ENGINEERS

RECOMMENDED FOR APPROVAL _____ DESIGN ENGINEER DATE

DESIGNED: JAL DRAWN: MP
CHECKED: RBI CHECKED: JAL

INDIANA
DEPARTMENT OF TRANSPORTATION

MAINTENANCE OF TRAFFIC PHASE IIIA
US 27

HORIZONTAL SCALE	BRIDGE FILE
1" = 50'	
VERTICAL SCALE	DESIGNATION
NONE	0100701
SURVEY BOOK	SHEETS
	42 of 278
CONTRACT	PROJECT
R-30397	0100701

12:09:03 PM 8/26/2016 P:\0170190\Plans\MnOTrf\MOT_US27_N_PH3A_08.dgn

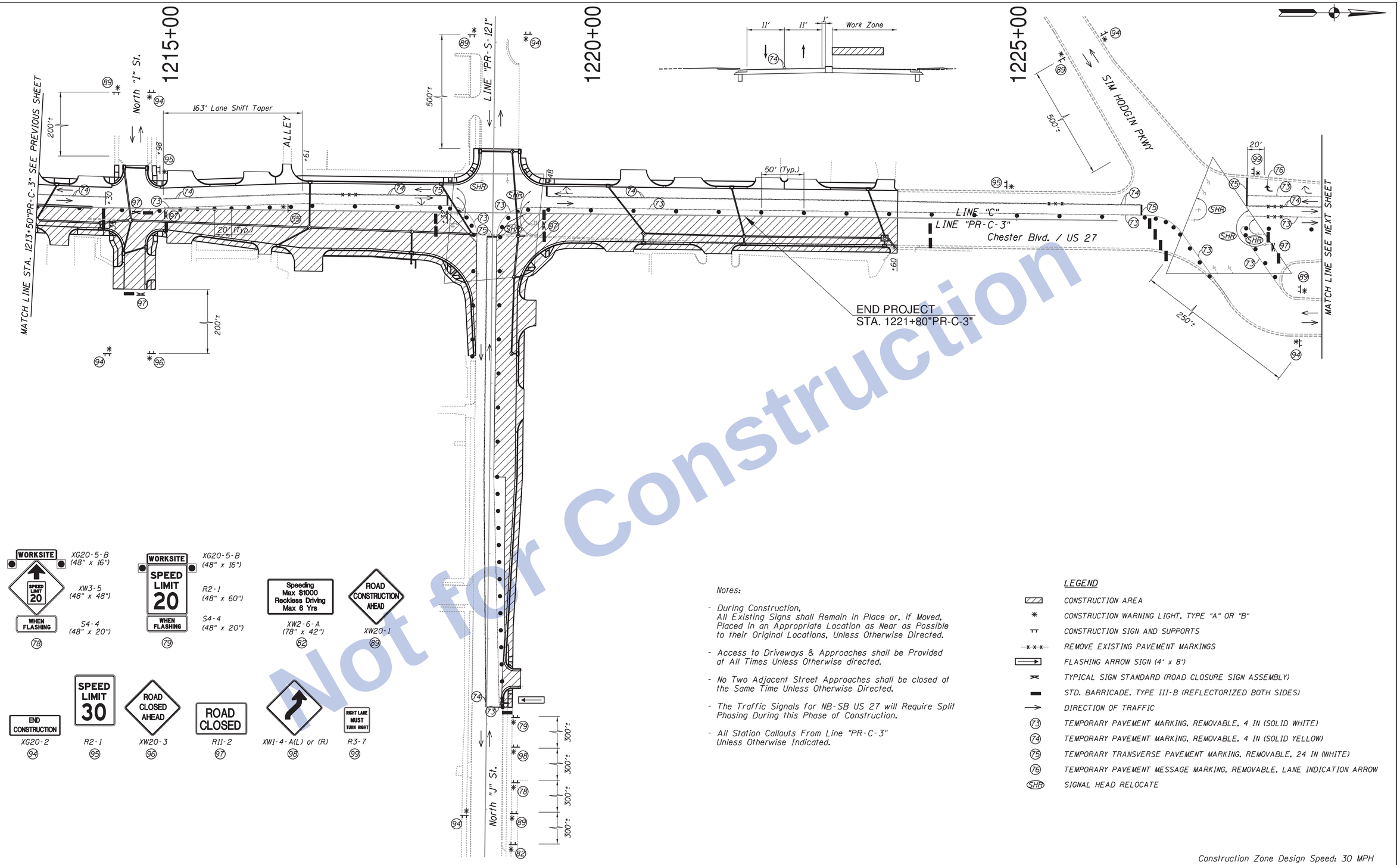

Not for Construction

Notes:

- During Construction, All Existing Signs shall Remain in Place or, if Moved, Placed in an Appropriate Location as Near as Possible to their Original Locations, Unless Otherwise Directed.
- Access to Driveways & Approaches shall be Provided at All Times Unless Otherwise directed.
- No Two Adjacent Street Approaches shall be closed at the Same Time Unless Otherwise Directed.
- The Traffic Signals for NB-SB US 27 will Require Split Phasing During this Phase of Construction.
- All Station Callouts From Line "PR-C-3" Unless Otherwise Indicated.

LEGEND

- CONSTRUCTION AREA
- CONSTRUCTION WARNING LIGHT, TYPE "A" OR "B"
- CONSTRUCTION SIGN AND SUPPORTS
- REMOVE EXISTING PAVEMENT MARKINGS
- FLASHING ARROW SIGN (4' x 8')
- TYPICAL SIGN STANDARD (ROAD CLOSURE SIGN ASSEMBLY)
- STD. BARRICADE, TYPE III-B (REFLECTORIZED BOTH SIDES)
- DIRECTION OF TRAFFIC
- 73 TEMPORARY PAVEMENT MARKING, REMOVABLE, 4 IN (SOLID WHITE)
- 74 TEMPORARY PAVEMENT MARKING, REMOVABLE, 4 IN (SOLID YELLOW)
- 75 TEMPORARY TRANSVERSE PAVEMENT MARKING, REMOVABLE, 24 IN (WHITE)
- 76 TEMPORARY PAVEMENT MESSAGE MARKING, REMOVABLE, LANE INDICATION ARROW
- SHR SIGNAL HEAD RELOCATE

Construction Zone Design Speed: 30 MPH

Clark Dietz ENGINEERS

RECOMMENDED FOR APPROVAL	DESIGN ENGINEER	DATE	
DESIGNED: JAL	DRAWN: MP		
CHECKED: RBI	CHECKED: JAL		

INDIANA
DEPARTMENT OF TRANSPORTATION

MAINTENANCE OF TRAFFIC PHASE IIIA
US 27

HORIZONTAL SCALE	BRIDGE FILE
1" = 50'	
VERTICAL SCALE	DESIGNATION
NONE	0100701
SURVEY BOOK	SHEETS
	43 of 278
CONTRACT	PROJECT
R-30397	0100701

12:09:05 PM8/26/2016 P:\10170190\Plans\MntOfTrf\MOT_US27_N_PH3A_09.dgn

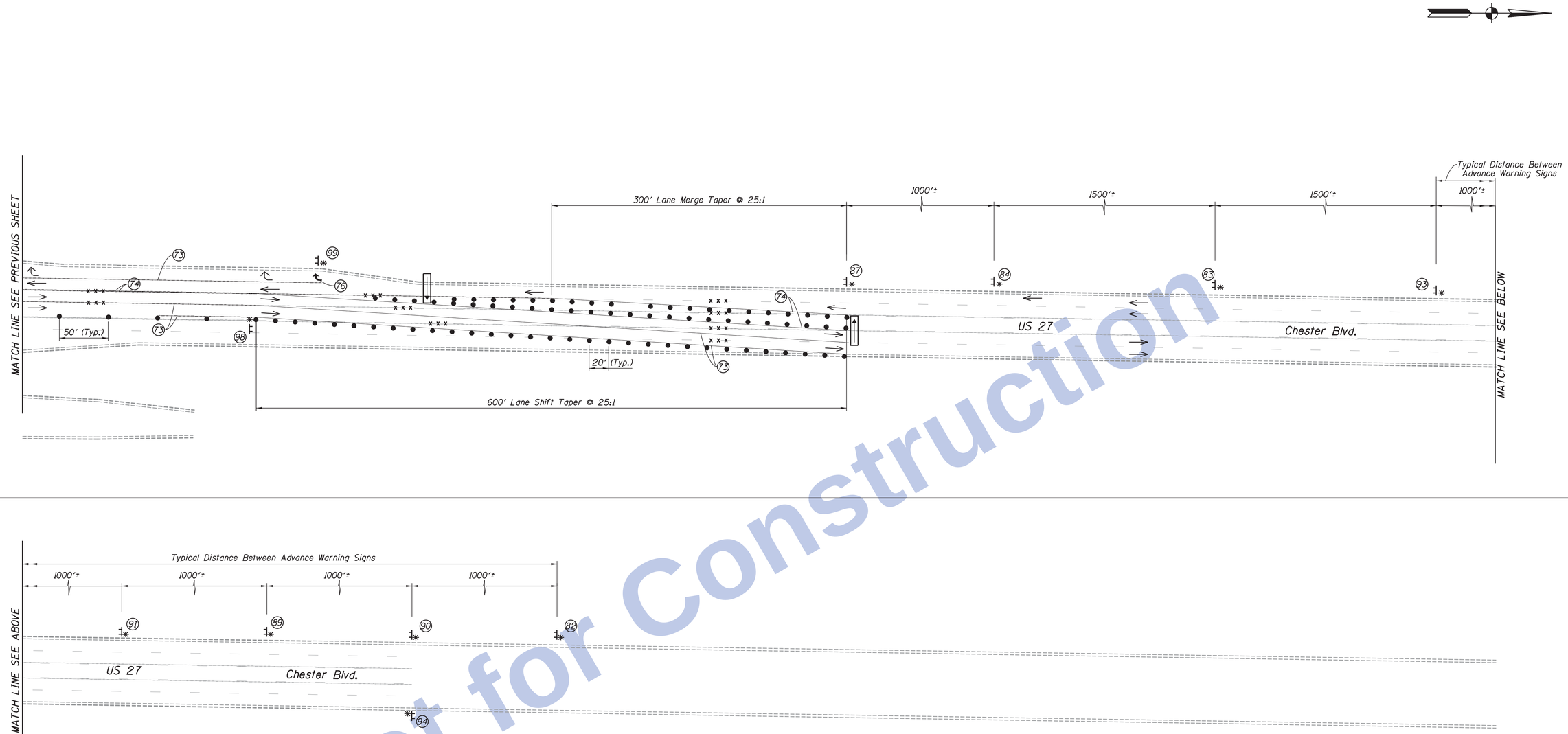

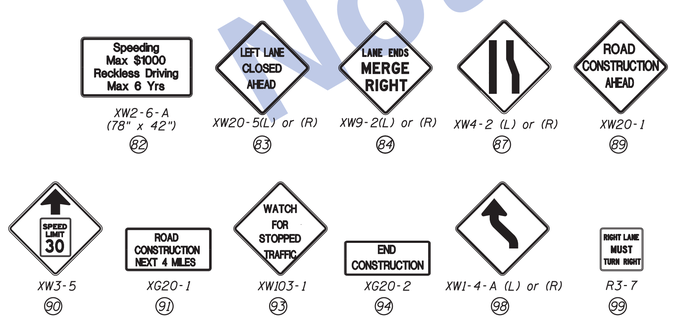

Notes:

- During Construction, All Existing Signs shall Remain in Place or, if Moved, Placed in an Appropriate Location as Near as Possible to their Original Locations, Unless Otherwise Directed.
- Access to Driveways & Approaches shall be Provided at All Times Unless Otherwise directed.
- No Two Adjacent Street Approaches shall be closed at the Same Time Unless Otherwise Directed.

LEGEND

- ✳ CONSTRUCTION WARNING LIGHT, TYPE "A" OR "B"
- • DRUM WITH TYPE "C" STEADY BURNING LIGHT
- ⊤⊤ CONSTRUCTION SIGN AND SUPPORTS
- -x-x-x- REMOVE EXISTING PAVEMENT MARKINGS
- FLASHING ARROW SIGN (4'x8')
- → DIRECTION OF TRAFFIC
- (73) TEMPORARY PAVEMENT MARKING, REMOVABLE, 4 IN (SOLID WHITE)
- (74) TEMPORARY PAVEMENT MARKING, REMOVABLE, 4 IN (SOLID YELLOW)
- (76) TEMPORARY PAVEMENT MESSAGE MARKING, REMOVABLE, LANE INDICATION ARROW

Construction Zone Design Speed: 30 MPH

Not for Construction

Clark Dietz ENGINEERS

RECOMMENDED FOR APPROVAL	DESIGN ENGINEER	DATE	
DESIGNED: JAL	DRAWN: MP		
CHECKED: RBI	CHECKED: JAL		

INDIANA
DEPARTMENT OF TRANSPORTATION

MAINTENANCE OF TRAFFIC PHASE IIIA
US 27

HORIZONTAL SCALE	BRIDGE FILE
1" = 50'	
VERTICAL SCALE	DESIGNATION
NONE	0100701
SURVEY BOOK	SHEETS
	44 of 278
CONTRACT	PROJECT
R-30397	0100701

12:09:07 PM8/26/2016 P:\10170190\Plans\MnOfTrf\MOT_US27_N_PH3A_10.dgn

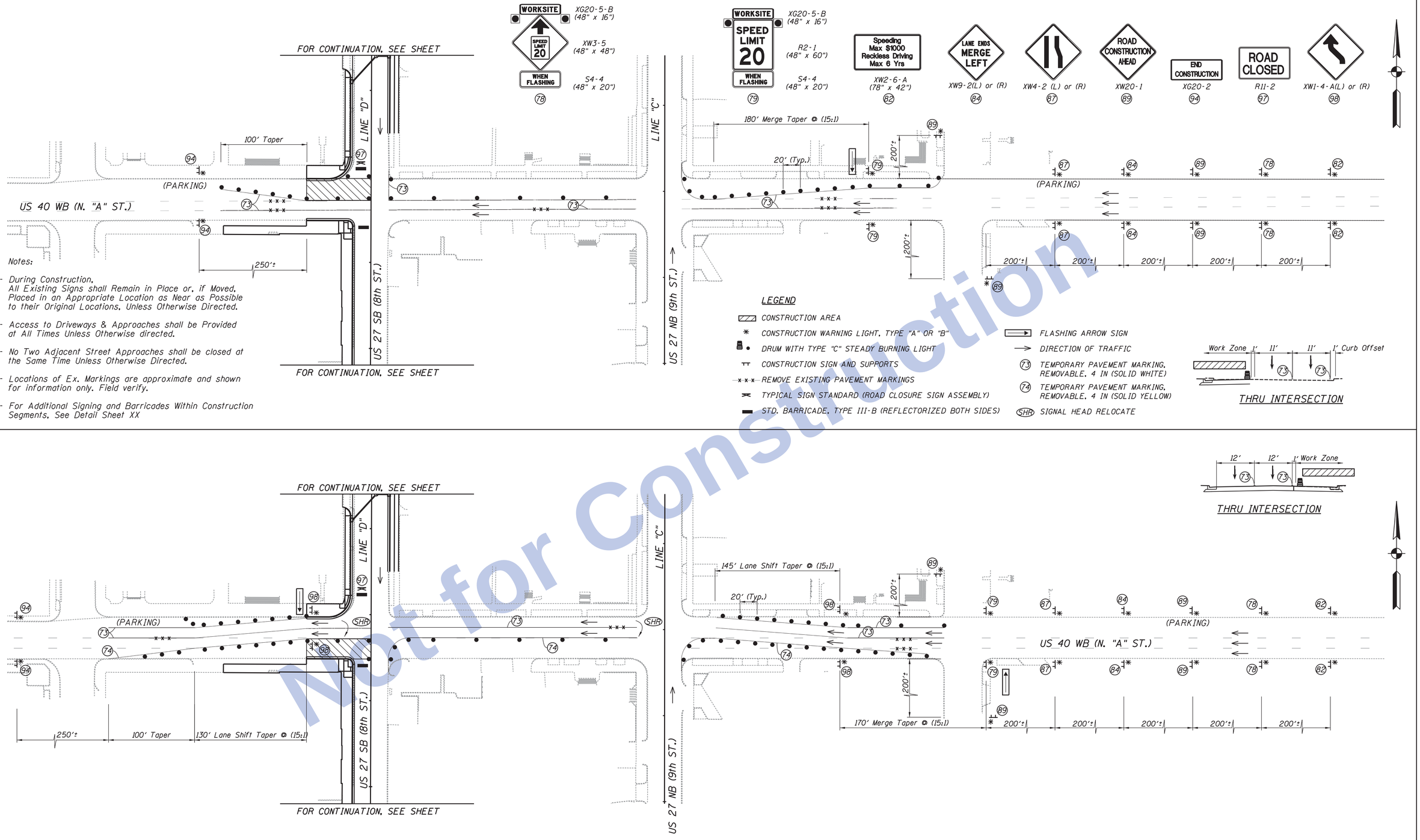

Notes:

- During Construction, All Existing Signs shall Remain in Place or, if Moved, Placed in an Appropriate Location as Near as Possible to their Original Locations, Unless Otherwise Directed.
- Access to Driveways & Approaches shall be Provided at All Times Unless Otherwise directed.
- No Two Adjacent Street Approaches shall be closed at the Same Time Unless Otherwise Directed.
- Locations of Ex. Markings are approximate and shown for information only. Field verify.
- For Additional Signing and Barricades Within Construction Segments, See Detail Sheet XX

Construction Zone Design Speed: 20 MPH

Not for Construction

Clark Dietz ENGINEERS

RECOMMENDED FOR APPROVAL	DESIGN ENGINEER	DATE	
DESIGNED: JAL	DRAWN: MP		
CHECKED: RBI	CHECKED: JAL		

INDIANA
DEPARTMENT OF TRANSPORTATION

MAINTENANCE OF TRAFFIC PHASE IIIA
US 27

HORIZONTAL SCALE 1" = 50'	BRIDGE FILE
VERTICAL SCALE NONE	DESIGNATION 0100701
SURVEY BOOK	SHEETS 45 of 278
CONTRACT R-30397	PROJECT 0100701

12:09:10 PM 8/26/2016 P:\10170190\Plans\MnOTrf\MOT_US27_N_PH3A_11 WB40_NS.dgn

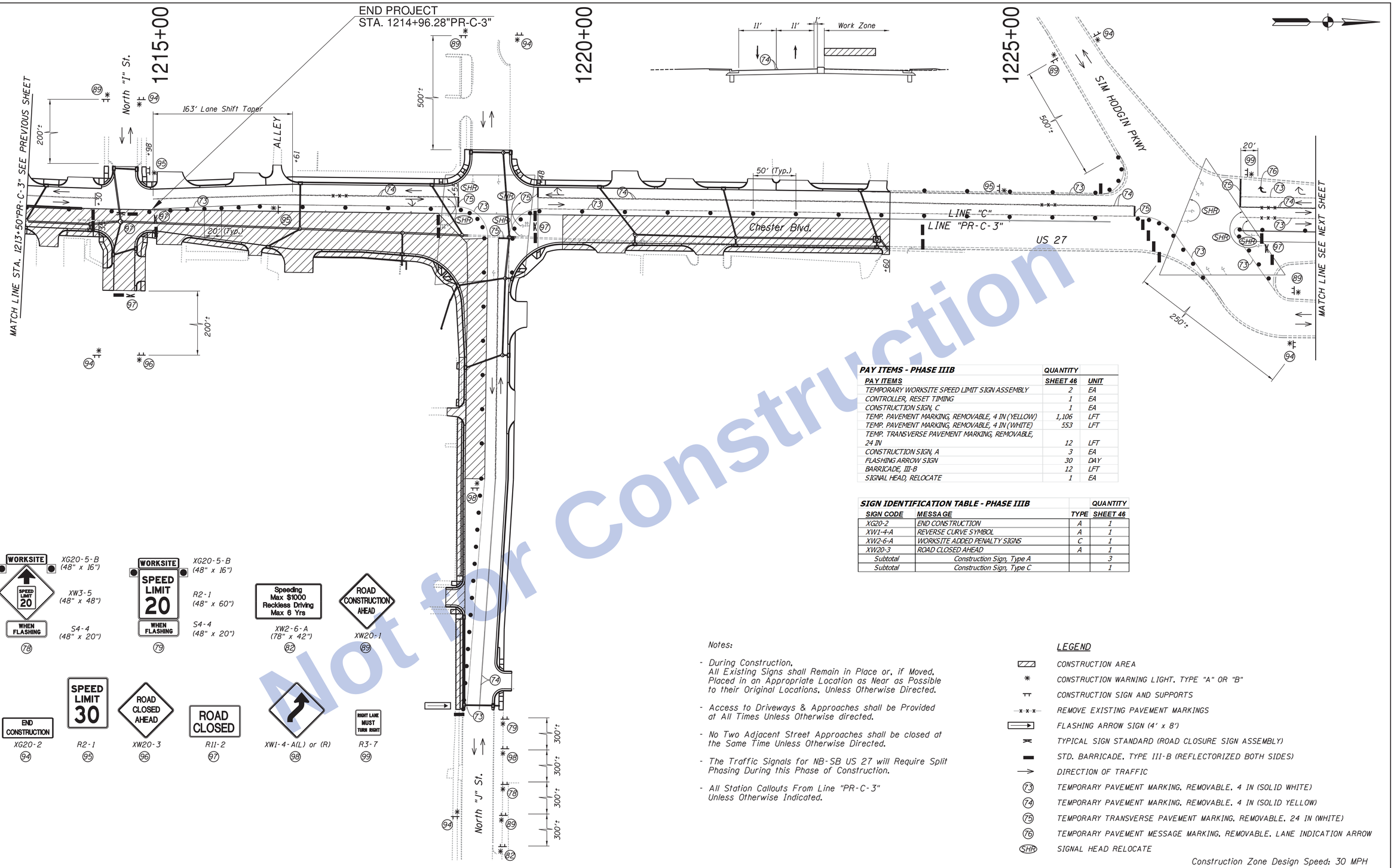

PAY ITEMS - PHASE IIIB	QUANTITY	
PAY ITEMS	SHEET 46	UNIT
TEMPORARY WORKSITE SPEED LIMIT SIGN ASSEMBLY	2	EA
CONTROLLER, RESET TIMING	1	EA
CONSTRUCTION SIGN, C	1	EA
TEMP. PAVEMENT MARKING, REMOVABLE, 4 IN (YELLOW)	1,106	LFT
TEMP. PAVEMENT MARKING, REMOVABLE, 4 IN (WHITE)	553	LFT
TEMP. TRANSVERSE PAVEMENT MARKING, REMOVABLE, 24 IN	12	LFT
CONSTRUCTION SIGN, A	3	EA
FLASHING ARROW SIGN	30	DAY
BARRICADE, III-B	12	LFT
SIGNAL HEAD, RELOCATE	1	EA

SIGN IDENTIFICATION TABLE - PHASE IIIB			QUANTITY
SIGN CODE	MESSAGE	TYPE	SHEET 46
XG20-2	END CONSTRUCTION	A	1
XW1-4-A	REVERSE CURVE SYMBOL	A	1
XW2-6-A	WORKSITE ADDED PENALTY SIGNS	C	1
XW20-3	ROAD CLOSED AHEAD	A	1
Subtotal	Construction Sign, Type A		3
Subtotal	Construction Sign, Type C		1

Notes:

- During Construction, All Existing Signs shall Remain in Place or, if Moved, Placed in an Appropriate Location as Near as Possible to their Original Locations, Unless Otherwise Directed.
- Access to Driveways & Approaches shall be Provided at All Times Unless Otherwise directed.
- No Two Adjacent Street Approaches shall be closed at the Same Time Unless Otherwise Directed.
- The Traffic Signals for NB-SB US 27 will Require Split Phasing During this Phase of Construction.
- All Station Callouts From Line "PR-C-3" Unless Otherwise Indicated.

LEGEND

- CONSTRUCTION AREA
- CONSTRUCTION WARNING LIGHT, TYPE "A" OR "B"
- CONSTRUCTION SIGN AND SUPPORTS
- REMOVE EXISTING PAVEMENT MARKINGS
- FLASHING ARROW SIGN (4' x 8')
- TYPICAL SIGN STANDARD (ROAD CLOSURE SIGN ASSEMBLY)
- STD. BARRICADE, TYPE III-B (REFLECTORIZED BOTH SIDES)
- DIRECTION OF TRAFFIC
- (73) TEMPORARY PAVEMENT MARKING, REMOVABLE, 4 IN (SOLID WHITE)
- (74) TEMPORARY PAVEMENT MARKING, REMOVABLE, 4 IN (SOLID YELLOW)
- (75) TEMPORARY TRANSVERSE PAVEMENT MARKING, REMOVABLE, 24 IN (WHITE)
- (76) TEMPORARY PAVEMENT MESSAGE MARKING, REMOVABLE, LANE INDICATION ARROW
- (SHR) SIGNAL HEAD RELOCATE

Construction Zone Design Speed: 30 MPH

Not for Construction

Clark Dietz ENGINEERS

RECOMMENDED FOR APPROVAL _____ DESIGN ENGINEER DATE

DESIGNED: JAL DRAWN: MP
CHECKED: RBI CHECKED: JAL

INDIANA
DEPARTMENT OF TRANSPORTATION

MAINTENANCE OF TRAFFIC PHASE IIIB
US 27

HORIZONTAL SCALE	BRIDGE FILE
1" = 50'	
VERTICAL SCALE	DESIGNATION
NONE	0100701
SURVEY BOOK	SHEETS
	46 of 278
CONTRACT	PROJECT
R-30397	0100701

12:09:13 PM 8/26/2016 P:\0170190\Plans\MnlOTrf\MOT_US27_N_PH3B_121.dgn

Notes:

- During Construction, All Existing Signs shall Remain in Place or, if Moved, Placed in an Appropriate Location as Near as Possible to their Original Locations, Unless Otherwise Directed.
- Access to Driveways & Approaches shall be Provided at All Times Unless Otherwise directed.
- No Two Adjacent Street Approaches shall be closed at the Same Time Unless Otherwise Directed.
- All Station Callouts From Line "C" Unless Otherwise Indicated.

1100+00

Speeding Max $1000 Reckless Driving Max 6 Yrs

XW2-6-A (78" x 42") (82)

ROAD CONSTRUCTION AHEAD

XW20-1 (89)

LEGEND

→ DIRECTION OF TRAFFIC

1105+00

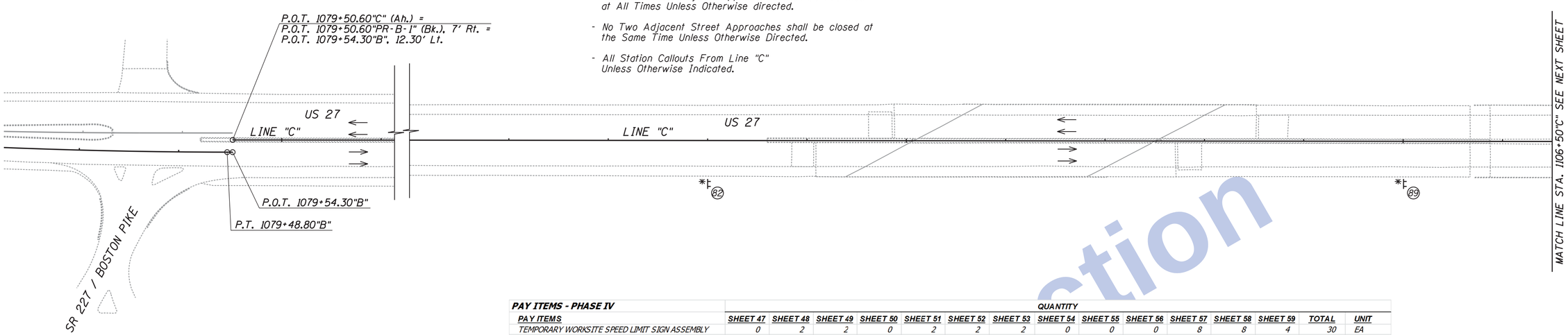

Not for Construction

PAY ITEMS - PHASE IV

PAY ITEMS	QUANTITY														
	SHEET 47	SHEET 48	SHEET 49	SHEET 50	SHEET 51	SHEET 52	SHEET 53	SHEET 54	SHEET 55	SHEET 56	SHEET 57	SHEET 58	SHEET 59	TOTAL	UNIT
TEMPORARY WORKSITE SPEED LIMIT SIGN ASSEMBLY	0	2	2	0	2	2	2	0	0	0	8	8	4	30	EA
CONTROLLER, RESET TIMING	0	0	0	0	0	0	0	0	2	0	2	4	8	16	EA
CONSTRUCTION SIGN, C	1	0	0	0	0	0	0	0	1	1	2	2	2	9	EA
ROAD CLOSURE SIGN ASSEMBLY	0	6	5	6	2	3	0	0	0	0	3	3	2	30	EA
ENERGY ABSORBING TERMINAL, CZ, TL-Z	0	0	0	0	0	0	0	0	0	0	0	0	0	0	EA
TEMP. PAVEMENT MARKING, REMOVABLE, 4 IN (YELLOW)	0	1,637	1,500	1,500	1,500	1,500	1,568	3,074	3,453	0	1,285	0	1,826	18,843	LFT
TEMP. PAVEMENT MARKING, REMOVABLE, 4 IN (WHITE)	0	0	0	35	0	0	0	0	2,212	0	1,155	1,884	2,171	7,457	LFT
TEMP. PAVEMENT MESSAGE MARKING, REMOVABLE, LANE INDICATION ARROW	0	0	0	1	0	0	0	0	0	0	0	0	0	1	EA
TEMP. TRANSVERSE PAVEMENT MARKING, REMOVABLE, 24 IN	0	0	0	0	0	0	20	0	152	0	60	100	60	392	LFT
CONSTRUCTION SIGN, A	1	14	10	14	4	18	21	0	14	6	16	16	14	148	EA
CONSTRUCTION SIGN, B	0	0	0	0	0	0	1	2	1	0	0	0	0	4	EA
FLASHING ARROW SIGN	0	0	0	0	0	0	120	0	60	0	90	60	90	420	DAY
BARRICADE, III-B	0	144	120	132	72	84	24	84	24	0	84	108	48	924	LFT
TEMP. TRAFFIC BARRIER, TYPE 2	0	0	0	0	0	0	0	0	0	0	0	0	0	0	LFT
SIGNAL HEAD, RELOCATE	0	0	0	0	0	0	0	0	0	0	4	4	4	12	EA
LINE, REMOVE	0	0	0	0	0	0	0	0	0	0	1,285	0	0	1,285	LFT

SIGN IDENTIFICATION TABLE - PHASE IV

SIGN CODE	MESSAGE	TYPE	QUANTITY												
			SHEET 47	SHEET 48	SHEET 49	SHEET 50	SHEET 51	SHEET 52	SHEET 53	SHEET 54	SHEET 55	SHEET 56	SHEET 57	SHEET 58	SHEET 59
R1-1	STOP	B	0	0	0	0	0	0	1	0	0	0	0	0	0
R2-1("30")	SPEED LIMIT 30	B	0	0	0	0	0	0	0	2	1	0	0	0	0
XG20-1	ROAD CONSTRUCTION NEXT __ MILES	A	0	0	0	0	0	0	0	0	0	1	0	0	0
XG20-2	END CONSTRUCTION	A	0	7	5	6	2	7	5	0	6	1	2	2	2
XW2-6-A	WORKSITE ADDED PENALTY SIGNS	C	1	0	0	0	0	0	0	0	1	1	2	2	2
XW103-1	WATCH FOR STOPPED TRAFFIC	A	0	0	0	0	0	0	0	0	0	1	0	0	0
XW1-4-A	REVERSE CURVE SYMBOL	A	0	1	0	0	0	0	0	0	0	0	0	0	4
XW20-1	ROAD CONSTRUCTION AHEAD SIGNS	A	1	3	2	5	1	5	8	0	6	1	6	6	4
XW20-3	ROAD CLOSED AHEAD	A	0	3	3	3	1	2	0	0	0	0	0	0	0
XW20-5	(RIGHT) OR (LEFT) LANE CLOSED AHEAD	A	0	0	0	0	0	2	2	0	0	1	0	0	0
XW3-5(30)	ARROW - "SPEED LIMIT 30"	A	0	0	0	0	0	0	0	0	0	1	0	0	0
XW4-2	LANE ENDS MERGE (RIGHT) OR (LEFT) [SYMBOL]	A	0	0	0	0	0	0	4	0	1	0	4	4	2
XW9-2	LANE ENDS MERGE (RIGHT) OR (LEFT)	A	0	0	0	0	0	2	2	0	1	0	4	4	2
Subtotal	Construction Sign, Type A	148	1	14	10	14	4	18	21	0	14	6	16	16	14
Subtotal	Construction Sign, Type B	4	0	0	0	0	0	0	1	2	1	0	0	0	0
Subtotal	Construction Sign, Type C	9	1	0	0	0	0	0	0	0	1	1	2	2	2

Clark Dietz ENGINEERS

RECOMMENDED FOR APPROVAL _____ DESIGN ENGINEER DATE

DESIGNED: JAL DRAWN: MP

CHECKED: RBI CHECKED: JAL

INDIANA DEPARTMENT OF TRANSPORTATION

MAINTENANCE OF TRAFFIC PHASE IV
US 27

HORIZONTAL SCALE	BRIDGE FILE
1" = 50'	
VERTICAL SCALE	DESIGNATION
NONE	0100701
SURVEY BOOK	SHEETS
	47 of 278
CONTRACT	PROJECT
R-30397	0100701

1:44:53 PM 8/26/2016 P:\0170190\Plans\MnlOTrf\MOT_US27_N_PH4_01.dgn

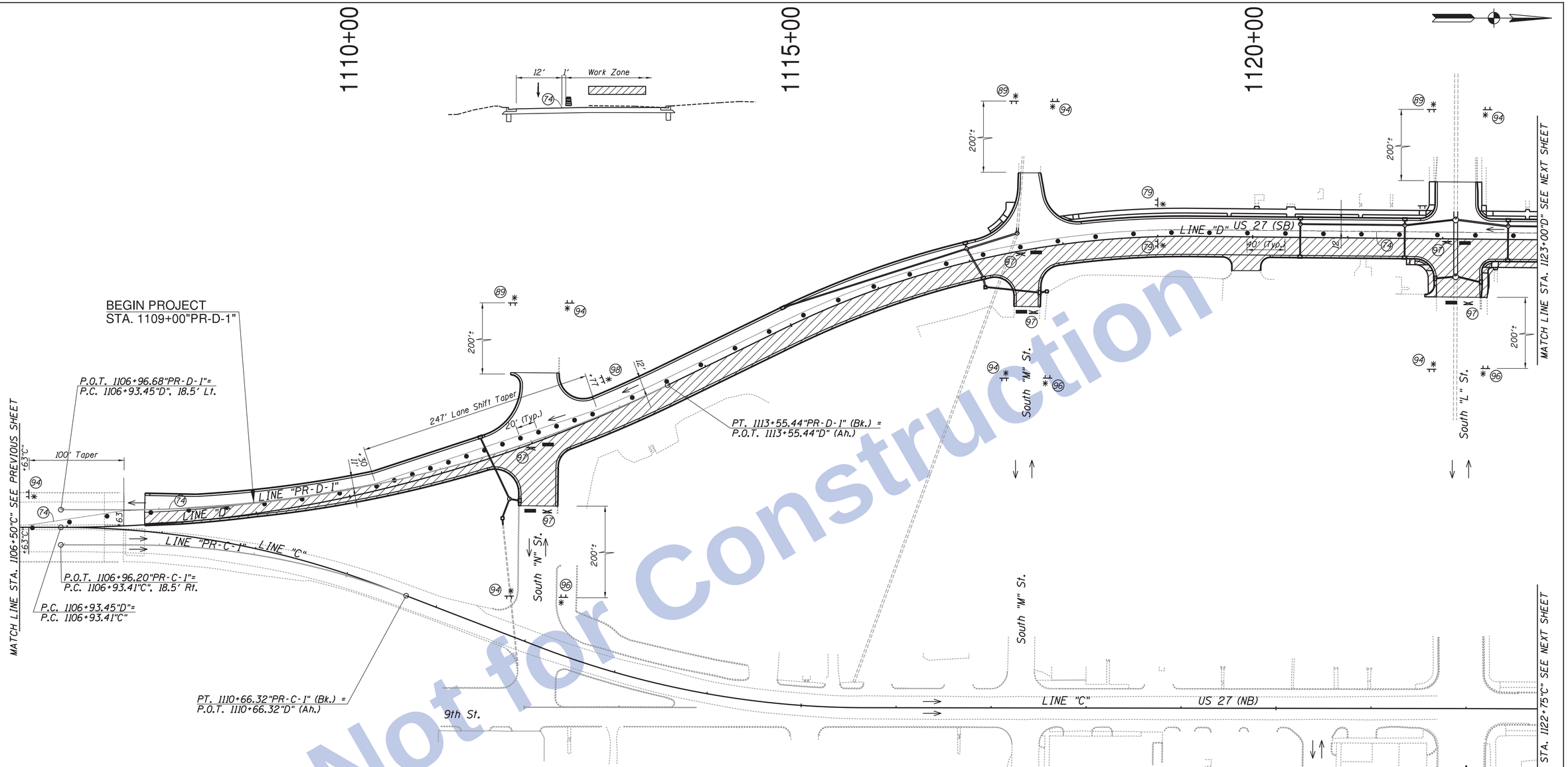

Not for Construction

Notes:

- During Construction, All Existing Signs shall Remain in Place or, if Moved, Placed in an Appropriate Location as Near as Possible to their Original Locations, Unless Otherwise Directed.
- Access to Driveways & Approaches shall be Provided at All Times Unless Otherwise directed.
- No Two Adjacent Street Approaches shall be closed at the Same Time Unless Otherwise Directed.
- All Station Callouts From Line "PR-D-1" Unless Otherwise Indicated.

LEGEND

- CONSTRUCTION AREA
- CONSTRUCTION WARNING LIGHT, TYPE "A" OR "B"
- CONSTRUCTION SIGN AND SUPPORTS
- STD. BARRICADE, TYPE III-B (REFLECTORIZED BOTH SIDES)
- DIRECTION OF TRAFFIC
- TYPICAL SIGN STANDARD (ROAD CLOSURE SIGN ASSEMBLY)
- (74) TEMPORARY PAVEMENT MARKING, REMOVABLE, 4 IN (SOLID YELLOW)

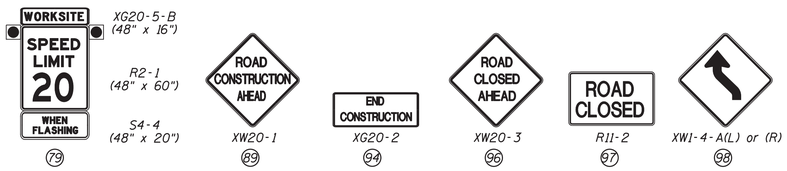

Construction Zone Design Speed: 20 MPH

Clark Dietz ENGINEERS

RECOMMENDED FOR APPROVAL ____ DESIGN ENGINEER DATE	INDIANA DEPARTMENT OF TRANSPORTATION	HORIZONTAL SCALE 1" = 50' / BRIDGE FILE / VERTICAL SCALE NONE / DESIGNATION 0100701
DESIGNED: JAL / DRAWN: MP / CHECKED: RBI / CHECKED: JAL	MAINTENANCE OF TRAFFIC PHASE IV US 27	SURVEY BOOK / SHEETS 48 of 278 / CONTRACT R-30397 / PROJECT 0100701

12:09:19 PM 8/26/2016 P:\0170190\Plans\MnOTr\MOT_US27_N_PH4_02.dgn

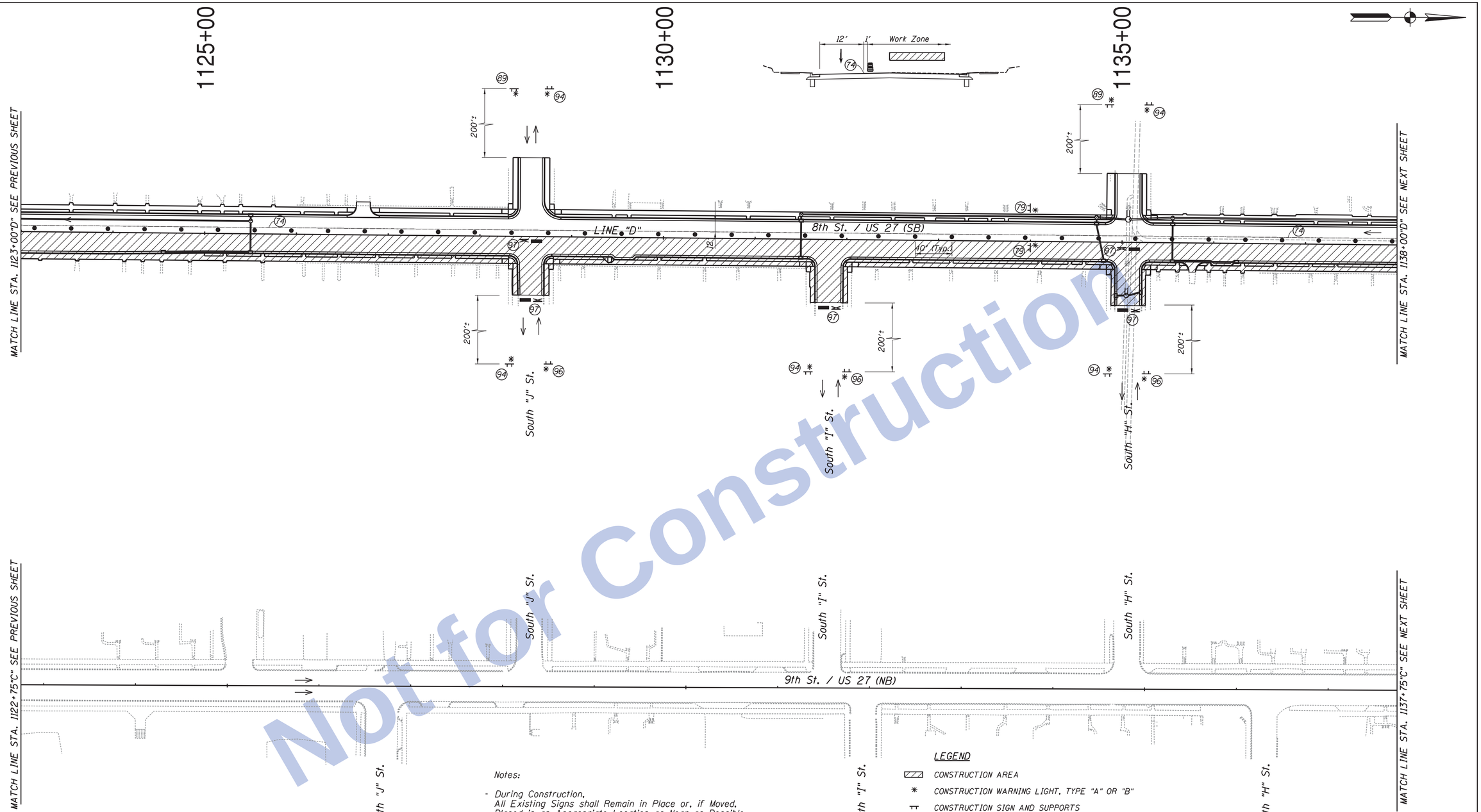

Not for Construction

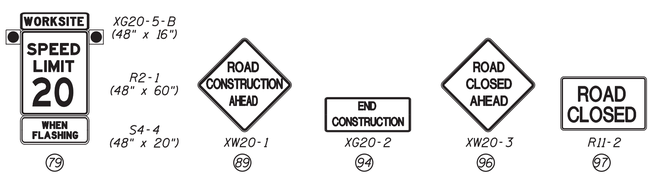

Notes:

- During Construction, All Existing Signs shall Remain in Place or, if Moved, Placed in an Appropriate Location as Near as Possible to their Original Locations, Unless Otherwise Directed.
- Access to Driveways & Approaches shall be Provided at All Times Unless Otherwise directed.
- No Two Adjacent Street Approaches shall be closed at the Same Time Unless Otherwise Directed.
- All Station Callouts From Line "D" Unless Otherwise Indicated.

LEGEND

- CONSTRUCTION AREA
- CONSTRUCTION WARNING LIGHT, TYPE "A" OR "B"
- CONSTRUCTION SIGN AND SUPPORTS
- STD. BARRICADE, TYPE III-B (REFLECTORIZED BOTH SIDES)
- DIRECTION OF TRAFFIC
- TYPICAL SIGN STANDARD (ROAD CLOSURE SIGN ASSEMBLY)
- (74) TEMPORARY PAVEMENT MARKING, REMOVABLE, 4 IN (SOLID YELLOW)

Construction Zone Design Speed: 20 MPH

Clark Dietz ENGINEERS

RECOMMENDED FOR APPROVAL	DESIGN ENGINEER	DATE	
DESIGNED: JAL	DRAWN: MP		
CHECKED: RBI	CHECKED: JAL		

INDIANA
DEPARTMENT OF TRANSPORTATION

MAINTENANCE OF TRAFFIC PHASE IV
US 27

HORIZONTAL SCALE	BRIDGE FILE
1" = 50'	
VERTICAL SCALE	DESIGNATION
NONE	0100701
SURVEY BOOK	SHEETS
	49 of 278
CONTRACT	PROJECT
R-30397	0100701

12:09:21 PM8/26/2016 P:\10170190\Plans\MntOfTrf\MOT_US27_N_PH4_03.dgn

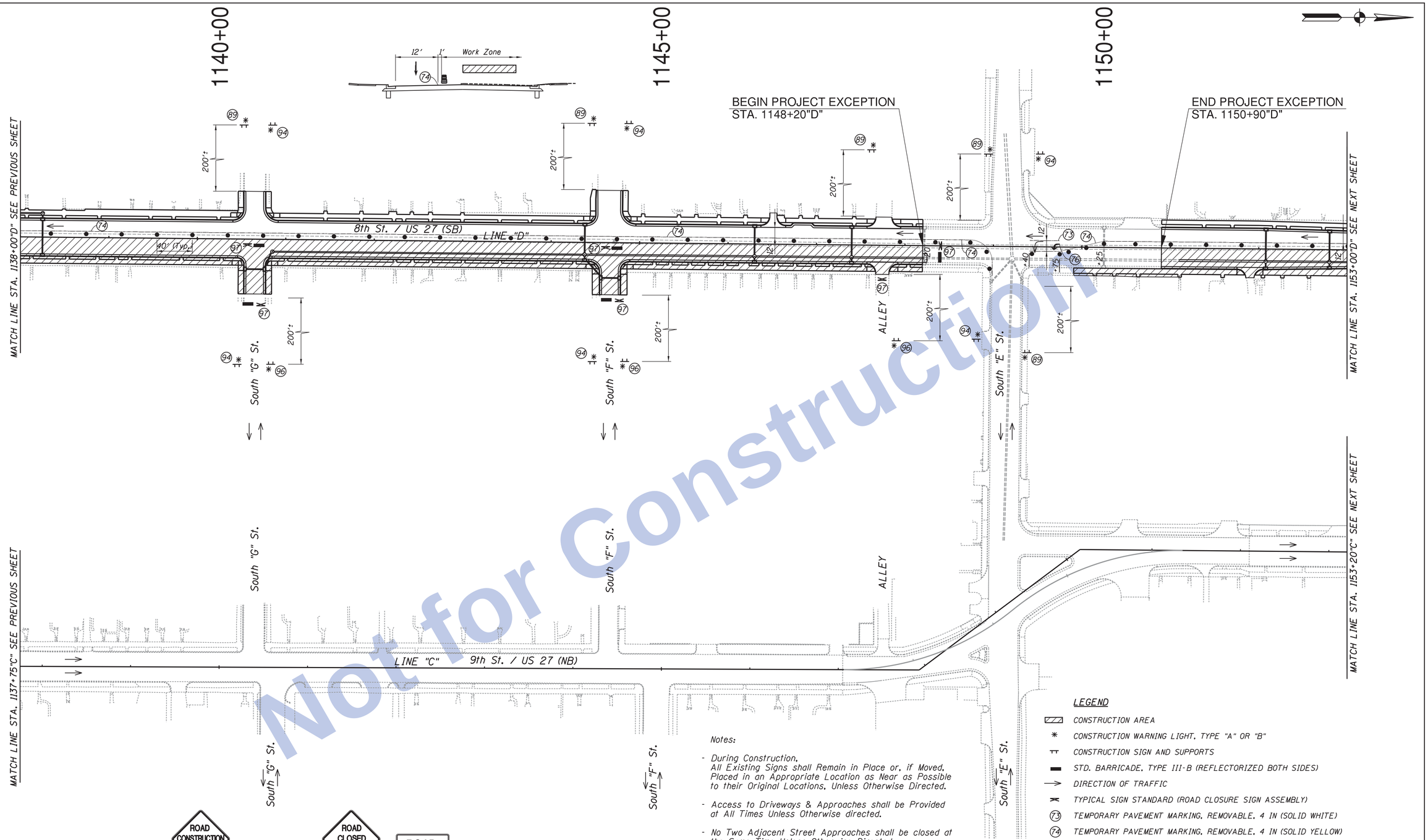

Not for Construction

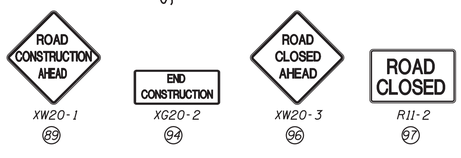

Notes:

- During Construction, All Existing Signs shall Remain in Place or, if Moved, Placed in an Appropriate Location as Near as Possible to their Original Locations, Unless Otherwise Directed.
- Access to Driveways & Approaches shall be Provided at All Times Unless Otherwise directed.
- No Two Adjacent Street Approaches shall be closed at the Same Time Unless Otherwise Directed.
- All Station Callouts From Line "D" Unless Otherwise Indicated.

LEGEND

- CONSTRUCTION AREA
- CONSTRUCTION WARNING LIGHT, TYPE "A" OR "B"
- CONSTRUCTION SIGN AND SUPPORTS
- STD. BARRICADE, TYPE III-B (REFLECTORIZED BOTH SIDES)
- DIRECTION OF TRAFFIC
- TYPICAL SIGN STANDARD (ROAD CLOSURE SIGN ASSEMBLY)
- 73 TEMPORARY PAVEMENT MARKING, REMOVABLE, 4 IN (SOLID WHITE)
- 74 TEMPORARY PAVEMENT MARKING, REMOVABLE, 4 IN (SOLID YELLOW)
- 76 TEMPORARY PAVEMENT MESSAGE MARKING, REMOVABLE, LANE INDICATION ARROW

Construction Zone Design Speed: 20 MPH

Clark Dietz ENGINEERS

RECOMMENDED FOR APPROVAL _____ DESIGN ENGINEER DATE

DESIGNED: JAL DRAWN: MP
CHECKED: RBI CHECKED: JAL

INDIANA DEPARTMENT OF TRANSPORTATION

MAINTENANCE OF TRAFFIC PHASE IV
US 27

HORIZONTAL SCALE	BRIDGE FILE
1" = 50'	
VERTICAL SCALE	DESIGNATION
NONE	0100701
SURVEY BOOK	SHEETS
	50 of 278
CONTRACT	PROJECT
R-30397	0100701

12:09:23 PM 8/26/2016 P:\0170190\Plans\Mnt0Trf\MOT_US27_IL_PH4_04.dgn

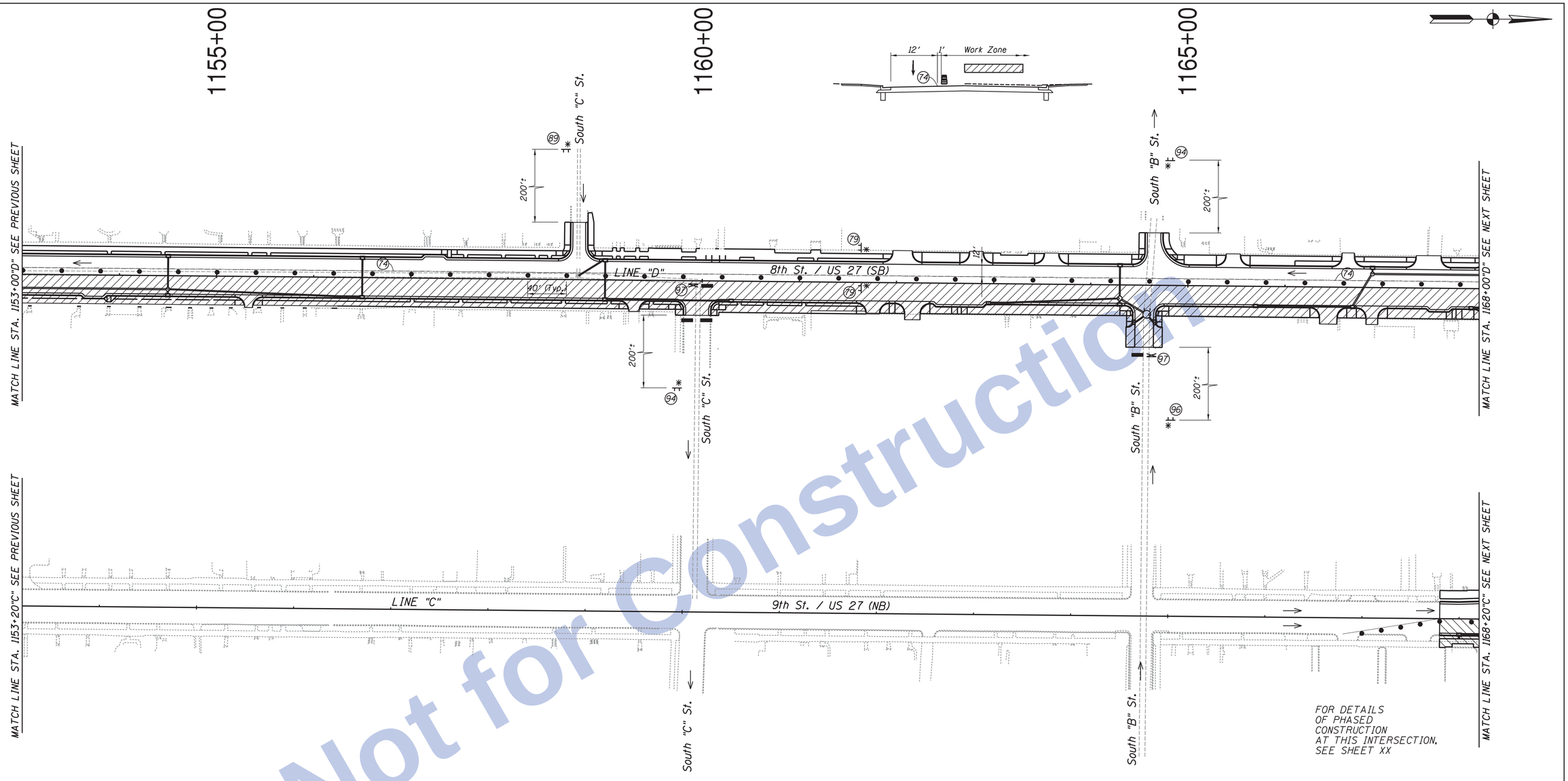

Not for Construction

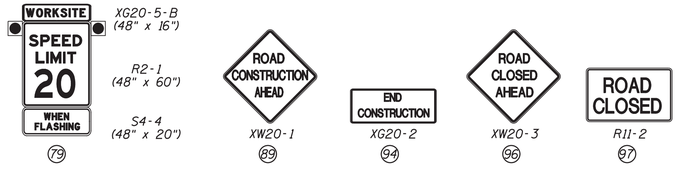

Notes:

- During Construction,
  All Existing Signs shall Remain in Place or, if Moved, Placed in an Appropriate Location as Near as Possible to their Original Locations, Unless Otherwise Directed.
- Access to Driveways & Approaches shall be Provided at All Times Unless Otherwise directed.
- No Two Adjacent Street Approaches shall be closed at the Same Time Unless Otherwise Directed.
- All Station Callouts From Line "D" Unless Otherwise Indicated.

LEGEND

- CONSTRUCTION AREA
- CONSTRUCTION WARNING LIGHT, TYPE "A" OR "B"
- CONSTRUCTION SIGN AND SUPPORTS
- STD. BARRICADE, TYPE III-B (REFLECTORIZED BOTH SIDES)
- DIRECTION OF TRAFFIC
- TYPICAL SIGN STANDARD (ROAD CLOSURE SIGN ASSEMBLY)
- (74) TEMPORARY PAVEMENT MARKING, REMOVABLE, 4 IN (SOLID YELLOW)

Construction Zone Design Speed: 20 MPH

Clark Dietz
ENGINEERS

RECOMMENDED FOR APPROVAL _____ DESIGN ENGINEER DATE

DESIGNED: JAL DRAWN: MP
CHECKED: RBI CHECKED: JAL

INDIANA
DEPARTMENT OF TRANSPORTATION

MAINTENANCE OF TRAFFIC PHASE IV
US 27

HORIZONTAL SCALE	BRIDGE FILE
1" = 50'	
VERTICAL SCALE	DESIGNATION
NONE	0100701
SURVEY BOOK	SHEETS
	51 of 278
CONTRACT	PROJECT
R-30397	0100701

12:09:25 PM 8/26/2016 P:\0170190\Plans\Mnt\Ofr\MOT_US27_N_PH4_05.dgn

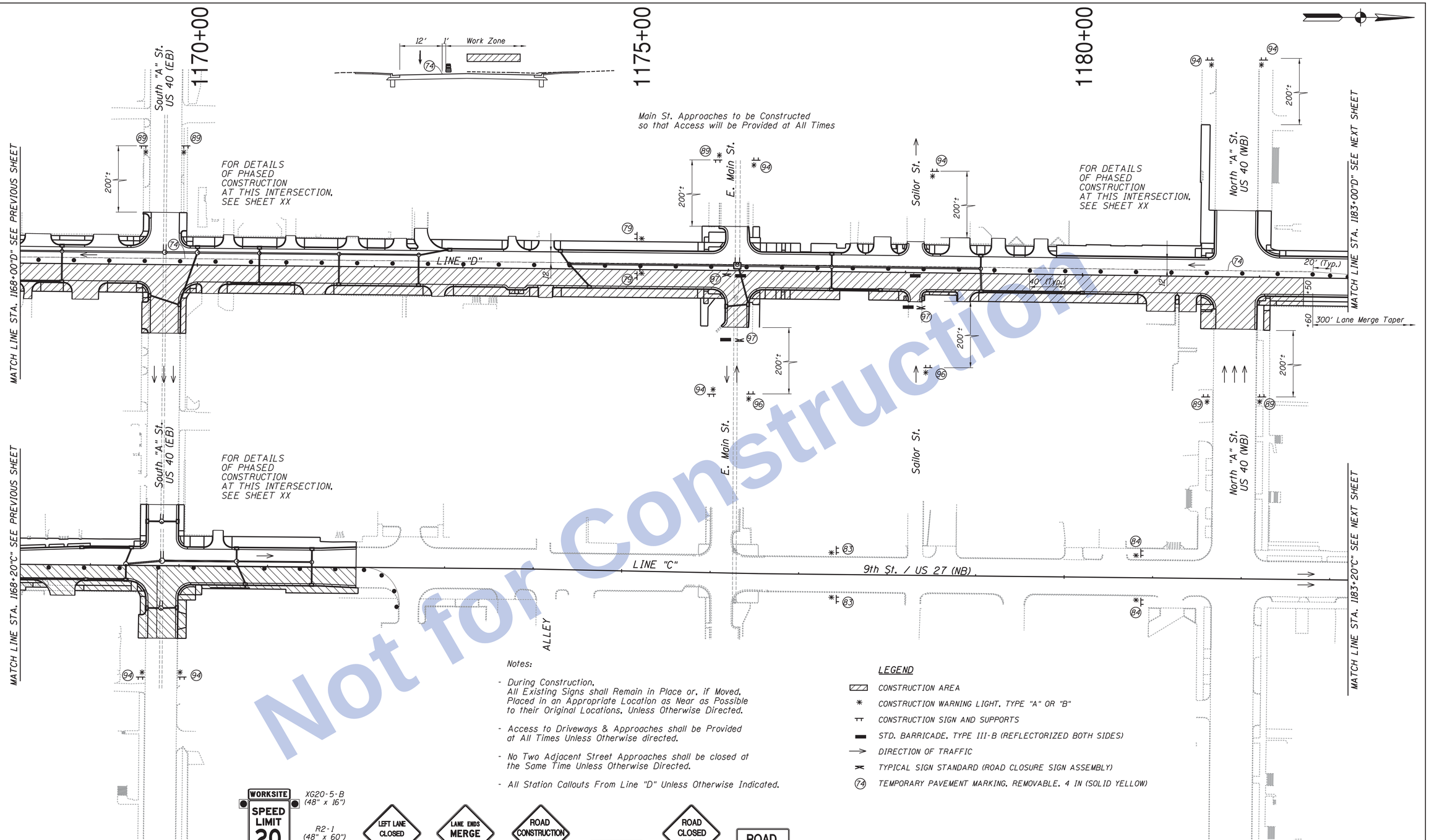

Notes:

- During Construction, All Existing Signs shall Remain in Place or, if Moved, Placed in an Appropriate Location as Near as Possible to their Original Locations, Unless Otherwise Directed.
- Access to Driveways & Approaches shall be Provided at All Times Unless Otherwise directed.
- No Two Adjacent Street Approaches shall be closed at the Same Time Unless Otherwise Directed.
- All Station Callouts From Line "D" Unless Otherwise Indicated.

LEGEND

- CONSTRUCTION AREA
- CONSTRUCTION WARNING LIGHT, TYPE "A" OR "B"
- CONSTRUCTION SIGN AND SUPPORTS
- STD. BARRICADE, TYPE III-B (REFLECTORIZED BOTH SIDES)
- DIRECTION OF TRAFFIC
- TYPICAL SIGN STANDARD (ROAD CLOSURE SIGN ASSEMBLY)
- (74) TEMPORARY PAVEMENT MARKING, REMOVABLE, 4 IN (SOLID YELLOW)

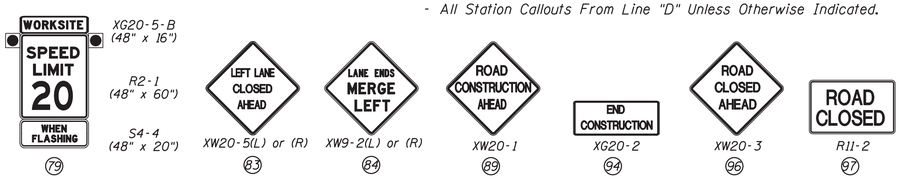

Construction Zone Design Speed: 20 MPH

Clark Dietz
ENGINEERS

RECOMMENDED FOR APPROVAL _____ DESIGN ENGINEER DATE	INDIANA DEPARTMENT OF TRANSPORTATION	HORIZONTAL SCALE 1" = 50'	BRIDGE FILE
		VERTICAL SCALE NONE	DESIGNATION 0100701
DESIGNED: JAL / DRAWN: MP	MAINTENANCE OF TRAFFIC PHASE IV US 27	SURVEY BOOK	SHEETS 52 of 278
CHECKED: RBI / CHECKED: JAL		CONTRACT R-30397	PROJECT 0100701

12:09:27 PM 8/26/2016 P:\0170190\Plans\MnOTr\MOT_US27_N_PH4_06.dgn

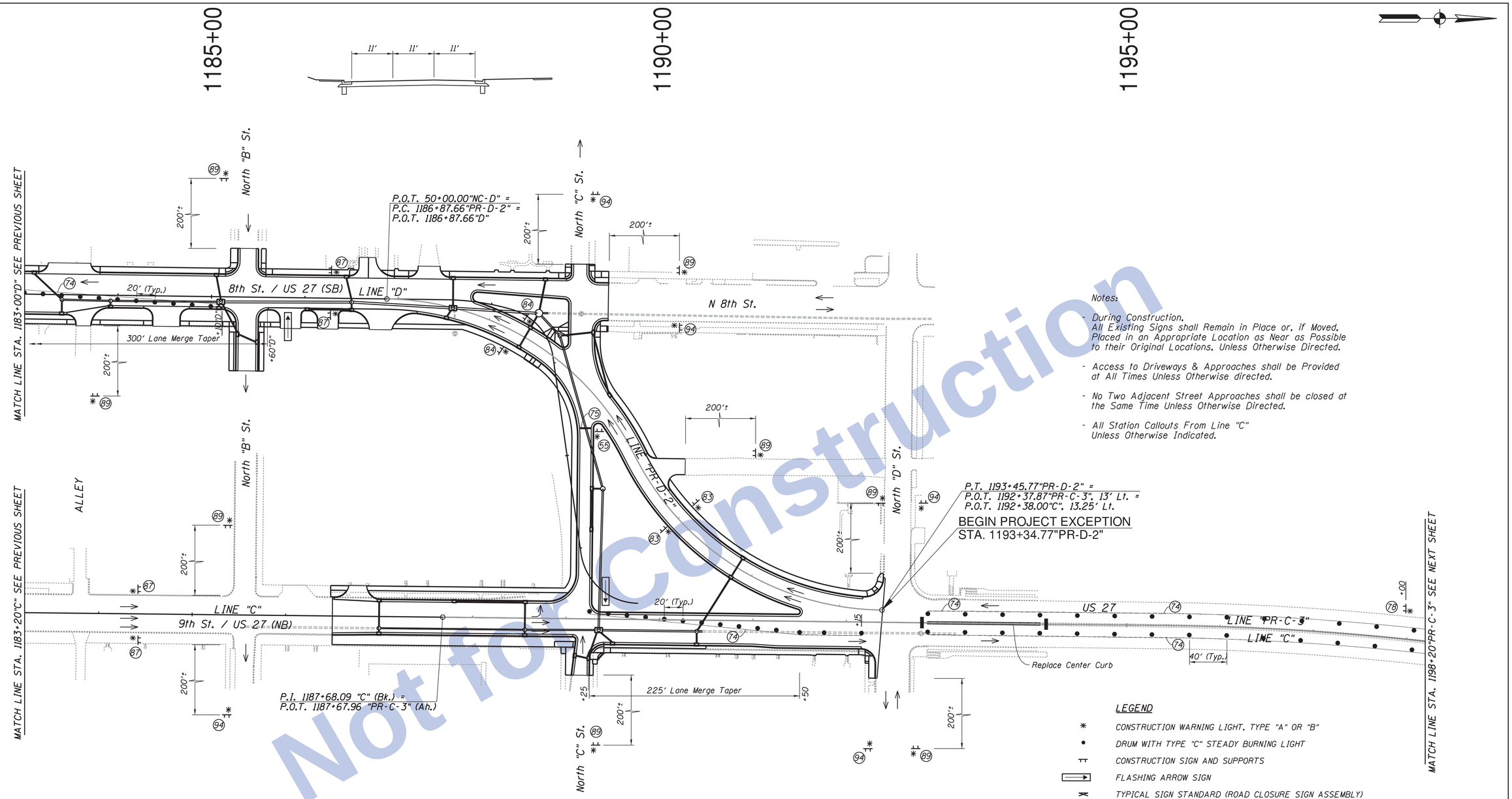

Notes:

- During Construction, All Existing Signs shall Remain in Place or, if Moved, Placed in an Appropriate Location as Near as Possible to their Original Locations, Unless Otherwise Directed.
- Access to Driveways & Approaches shall be Provided at All Times Unless Otherwise directed.
- No Two Adjacent Street Approaches shall be closed at the Same Time Unless Otherwise Directed.
- All Station Callouts From Line "C" Unless Otherwise Indicated.

LEGEND

- CONSTRUCTION WARNING LIGHT, TYPE "A" OR "B"
- DRUM WITH TYPE "C" STEADY BURNING LIGHT
- CONSTRUCTION SIGN AND SUPPORTS
- FLASHING ARROW SIGN
- TYPICAL SIGN STANDARD (ROAD CLOSURE SIGN ASSEMBLY)
- STD. BARRICADE, TYPE III-B (REFLECTORIZED BOTH SIDES)
- DIRECTION OF TRAFFIC
- (73) TEMPORARY PAVEMENT MARKING, REMOVABLE, 4 IN (SOLID WHITE)
- (74) TEMPORARY PAVEMENT MARKING, REMOVABLE, 4 IN (SOLID YELLOW)
- (75) TEMPORARY TRANSVERSE PAVEMENT MARKING, REMOVABLE, 24 IN (WHITE)

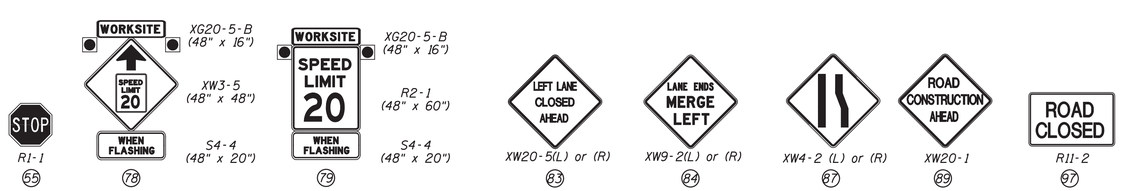

Construction Zone Design Speed: 20 MPH

Clark Dietz ENGINEERS

RECOMMENDED FOR APPROVAL _____ DESIGN ENGINEER DATE

DESIGNED: JAL DRAWN: MP
CHECKED: RBI CHECKED: JAL

INDIANA
DEPARTMENT OF TRANSPORTATION

MAINTENANCE OF TRAFFIC PHASE IV
US 27

HORIZONTAL SCALE	BRIDGE FILE
1" = 50′	
VERTICAL SCALE	DESIGNATION
NONE	0100701
SURVEY BOOK	SHEETS
	53 of 278
CONTRACT	PROJECT
R-30397	0100701

12:09:29 PM 8/26/2016 P:\0170190\Plans\MnOITr\MOT_US27_N_PH4_07.dgn

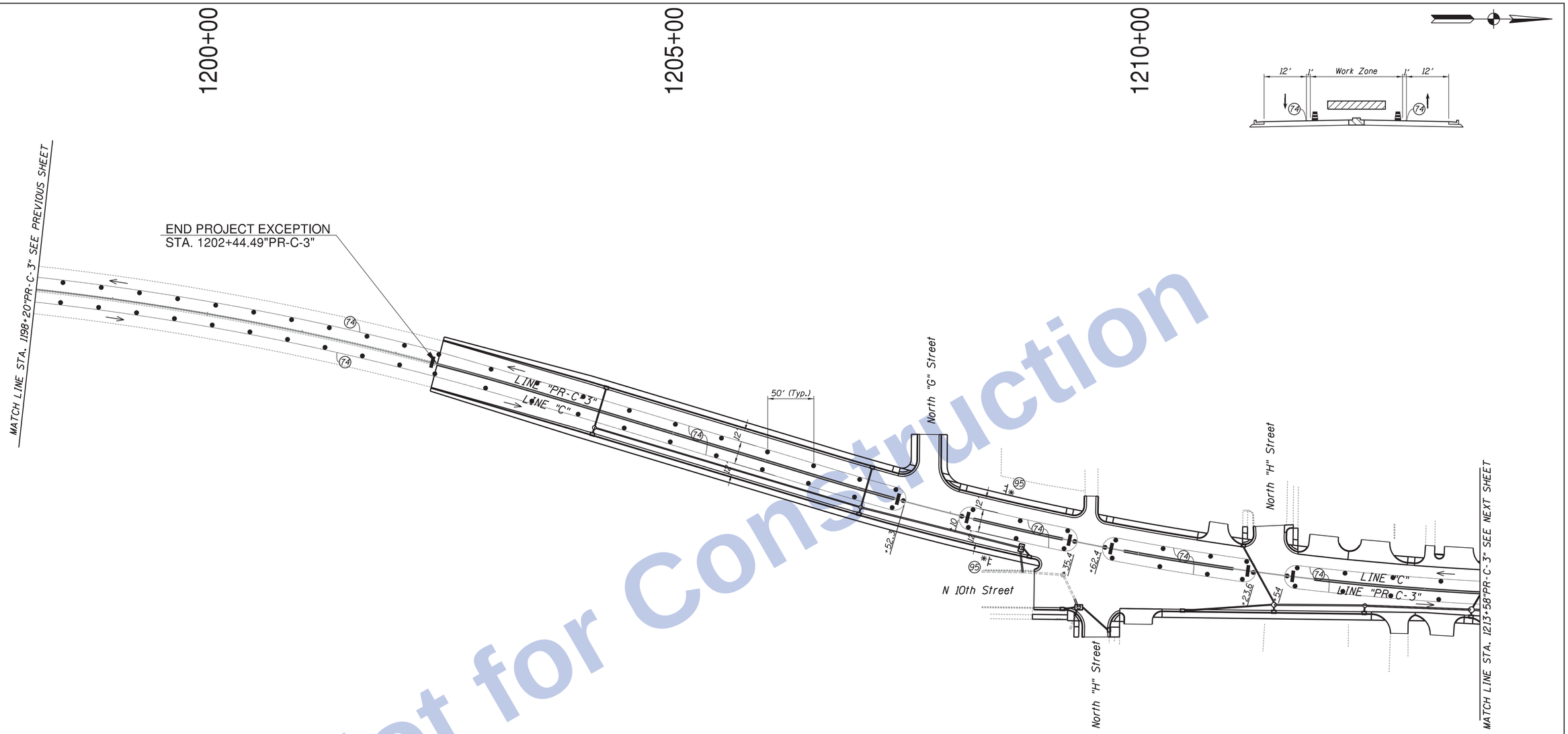

Not for Construction

R2-1
95

Notes:

- During Construction, All Existing Signs shall Remain in Place or, if Moved, Placed in an Appropriate Location as Near as Possible to their Original Locations, Unless Otherwise Directed.
- Access to Driveways & Approaches shall be Provided at All Times Unless Otherwise directed.
- No Two Adjacent Street Approaches shall be closed at the Same Time Unless Otherwise Directed.
- All Station Callouts From Line "PR-C-3" Unless Otherwise Indicated.

LEGEND

- CONSTRUCTION AREA
- CONSTRUCTION WARNING LIGHT, TYPE "A" OR "B"
- DRUM WITH TYPE "C" STEADY BURNING LIGHT
- CONSTRUCTION SIGN AND SUPPORTS
- FLASHING ARROW SIGN
- STD. BARRICADE, TYPE III-B (REFLECTORIZED BOTH SIDES)
- TRAFFIC FLOW ARROW
- 74 TEMPORARY PAVEMENT MARKING, REMOVABLE, 4 IN (SOLID YELLOW)

Construction Zone Design Speed: 30 MPH

Clark Dietz
ENGINEERS

RECOMMENDED FOR APPROVAL _____ DESIGN ENGINEER DATE

DESIGNED: JAL DRAWN: MP
CHECKED: RBI CHECKED: JAL

INDIANA
DEPARTMENT OF TRANSPORTATION

MAINTENANCE OF TRAFFIC PHASE IV
US 27

HORIZONTAL SCALE	BRIDGE FILE
1" = 50'	
VERTICAL SCALE	DESIGNATION
NONE	0100701
SURVEY BOOK	SHEETS
	54 of 278
CONTRACT	PROJECT
R-30397	0100701

12:09:31 PM 8/26/2016 P:\0170190\Plans\MnlOTrf\MOT_US27_N_PH4_08.dgn

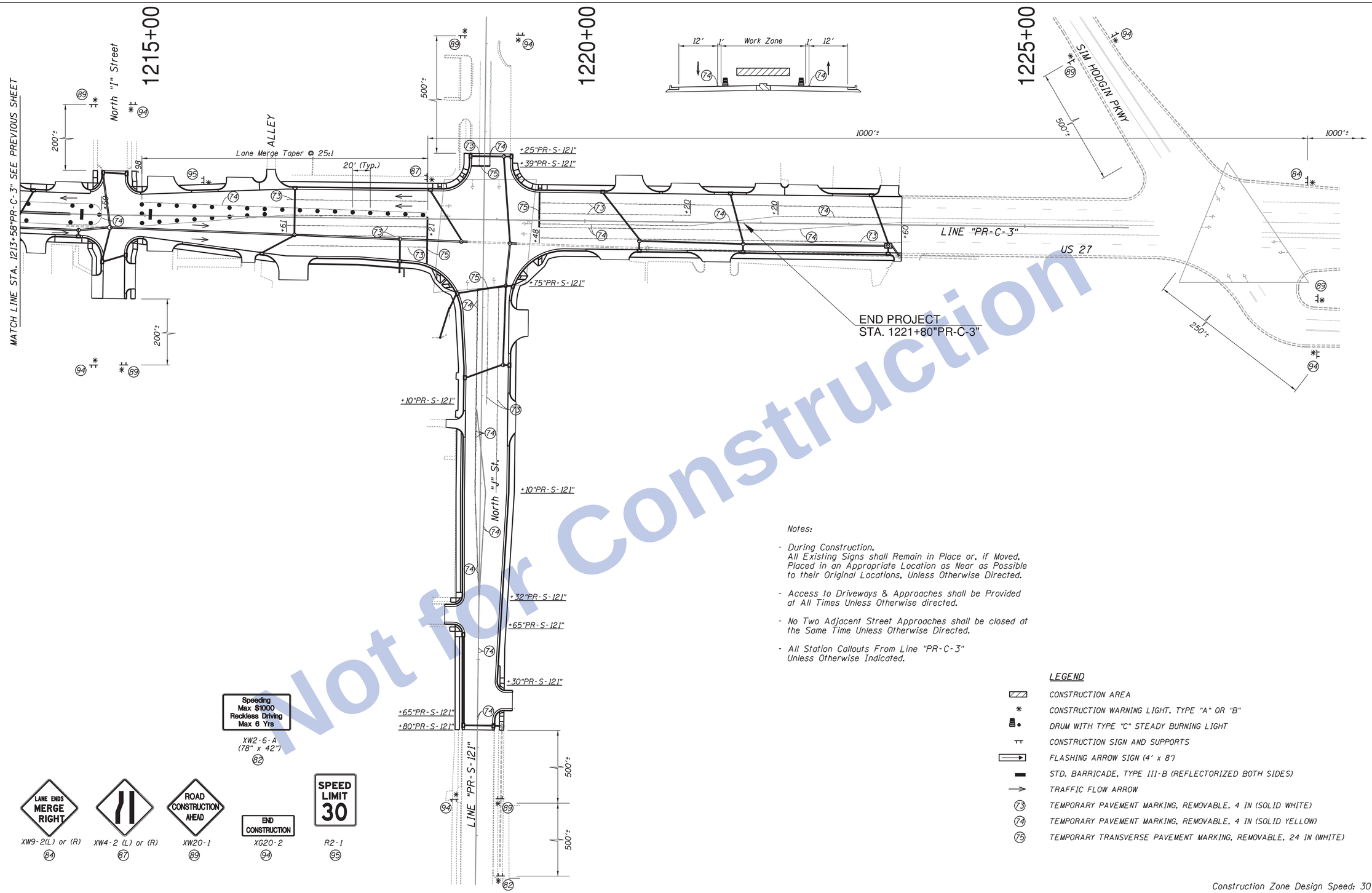

Not for Construction

Notes:

- During Construction, All Existing Signs shall Remain in Place or, if Moved, Placed in an Appropriate Location as Near as Possible to their Original Locations, Unless Otherwise Directed.
- Access to Driveways & Approaches shall be Provided at All Times Unless Otherwise directed.
- No Two Adjacent Street Approaches shall be closed at the Same Time Unless Otherwise Directed.
- All Station Callouts From Line "PR-C-3" Unless Otherwise Indicated.

LEGEND

- CONSTRUCTION AREA
- CONSTRUCTION WARNING LIGHT, TYPE "A" OR "B"
- DRUM WITH TYPE "C" STEADY BURNING LIGHT
- CONSTRUCTION SIGN AND SUPPORTS
- FLASHING ARROW SIGN (4' x 8')
- STD. BARRICADE, TYPE III-B (REFLECTORIZED BOTH SIDES)
- TRAFFIC FLOW ARROW
- (73) TEMPORARY PAVEMENT MARKING, REMOVABLE, 4 IN (SOLID WHITE)
- (74) TEMPORARY PAVEMENT MARKING, REMOVABLE, 4 IN (SOLID YELLOW)
- (75) TEMPORARY TRANSVERSE PAVEMENT MARKING, REMOVABLE, 24 IN (WHITE)

Construction Zone Design Speed: 30 MPH

Clark Dietz
ENGINEERS

RECOMMENDED FOR APPROVAL _____ DESIGN ENGINEER DATE

DESIGNED: JAL DRAWN: MP
CHECKED: RBI CHECKED: JAL

INDIANA
DEPARTMENT OF TRANSPORTATION

MAINTENANCE OF TRAFFIC PHASE IV
US 27

HORIZONTAL SCALE	BRIDGE FILE
1" = 50'	
VERTICAL SCALE	DESIGNATION
NONE	0100701
SURVEY BOOK	SHEETS
	55 of 278
CONTRACT	PROJECT
R-30397	0100701

12:09:33 PM 8/26/2016 P:\0170190\Plans\Wet01fr1\WOT_US27_N_PH4_09.dgn

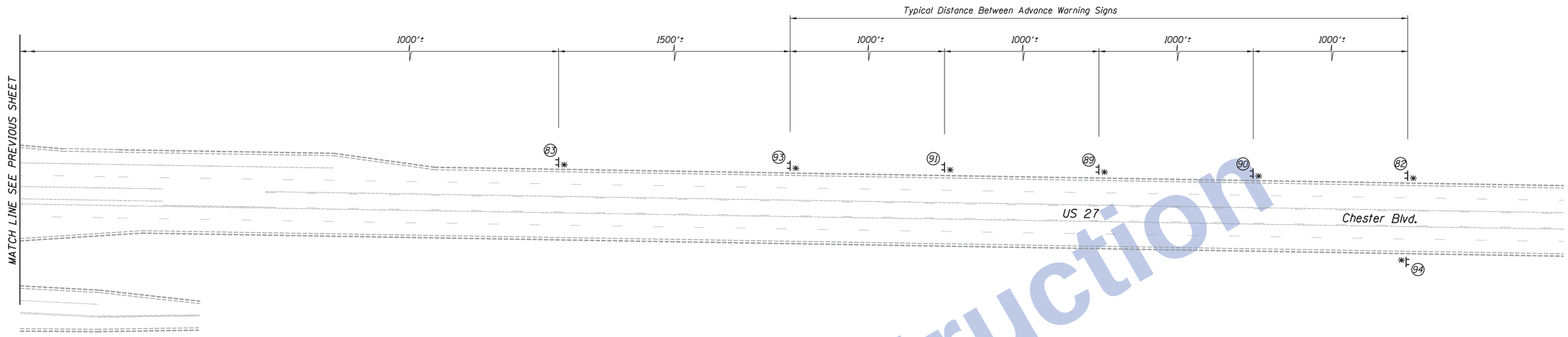

Not for Construction

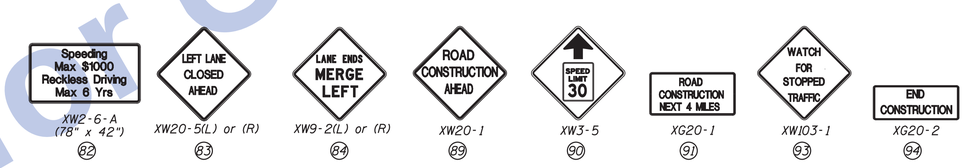

XW2-6-A (78" x 42")	XW20-5(L) or (R)	XW9-2(L) or (R)	XW20-1	XW3-5	XG20-1	XW103-1	XG20-2
82	83	84	89	90	91	93	94

LEGEND

* CONSTRUCTION WARNING LIGHT, TYPE "A" OR "B"

⊤⊤ CONSTRUCTION SIGN AND SUPPORTS

Notes:

- During Construction, All Existing Signs shall Remain in Place or, if Moved, Placed in an Appropriate Location as Near as Possible to their Original Locations, Unless Otherwise Directed.
- Access to Driveways & Approaches shall be Provided at All Times Unless Otherwise directed.
- No Two Adjacent Street Approaches shall be closed at the Same Time Unless Otherwise Directed.

Construction Zone Design Speed: 30 MPH

Clark Dietz ENGINEERS

RECOMMENDED FOR APPROVAL _____ DESIGN ENGINEER DATE

DESIGNED: JAL DRAWN: MP

CHECKED: RBI CHECKED: JAL

INDIANA DEPARTMENT OF TRANSPORTATION

MAINTENANCE OF TRAFFIC PHASE IV US 27

HORIZONTAL SCALE	BRIDGE FILE
1" = 50'	
VERTICAL SCALE	DESIGNATION
NONE	0100701
SURVEY BOOK	SHEETS
	56 of 278
CONTRACT	PROJECT
R-30397	0100701

12:09:35 PM 8/26/2016 P:\10170190\Plans\MnOfTrf\MOT_US27_N_PH4_10.dgn

LEGEND

- CONSTRUCTION AREA
- CONSTRUCTION WARNING LIGHT, TYPE "A" OR "B"
- DRUM WITH TYPE "C" STEADY BURNING LIGHT
- CONSTRUCTION SIGN AND SUPPORTS
- REMOVE EXISTING PAVEMENT MARKINGS
- TYPICAL SIGN STANDARD (ROAD CLOSURE SIGN ASSEMBLY)
- STD. BARRICADE, TYPE III-B (REFLECTORIZED BOTH SIDES)
- DIRECTION OF TRAFFIC
- FLASHING ARROW SIGN
- (73) TEMPORARY PAVEMENT MARKING, REMOVABLE, 4 IN (SOLID WHITE)
- (74) TEMPORARY PAVEMENT MARKING, REMOVABLE, 4 IN (SOLID YELLOW)
- (75) TEMP. TRANSVERSE PAVEMENT MARKING, REMOVABLE, 24 IN (WHITE)
- (SHR) SIGNAL HEAD RELOCATE

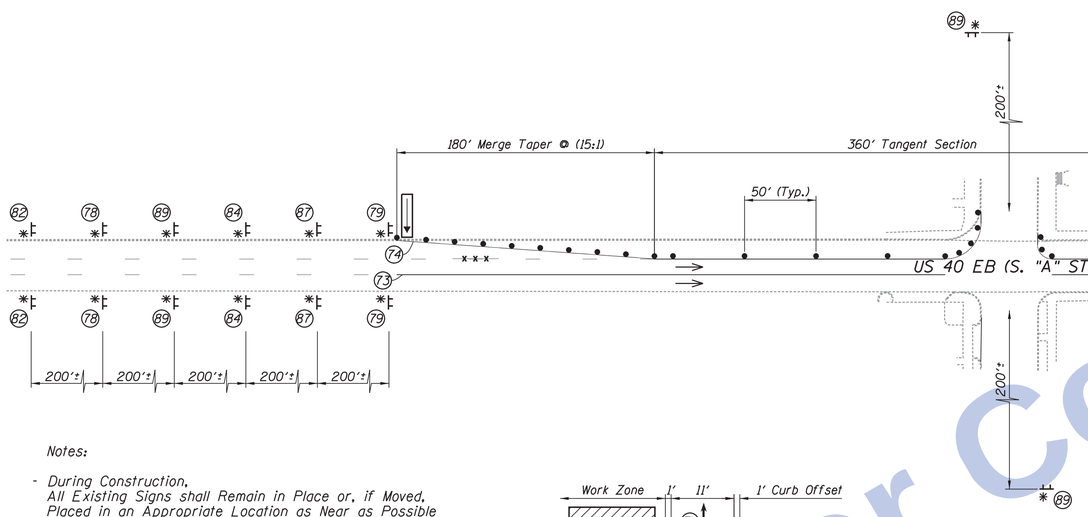

Notes:

- During Construction, All Existing Signs shall Remain in Place or, if Moved, Placed in an Appropriate Location as Near as Possible to their Original Locations, Unless Otherwise Directed.
- Access to Driveways & Approaches shall be Provided at All Times Unless Otherwise directed.
- No Two Adjacent Street Approaches shall be closed at the Same Time Unless Otherwise Directed.
- Locations of Ex. Markings are Approximate and Shown for Information Only. Field Verify.
- For Additional Signing and Barricades Within Construction Segments, See Detail Sheet XX

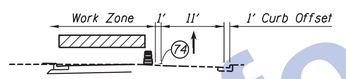

THRU INTERSECTION

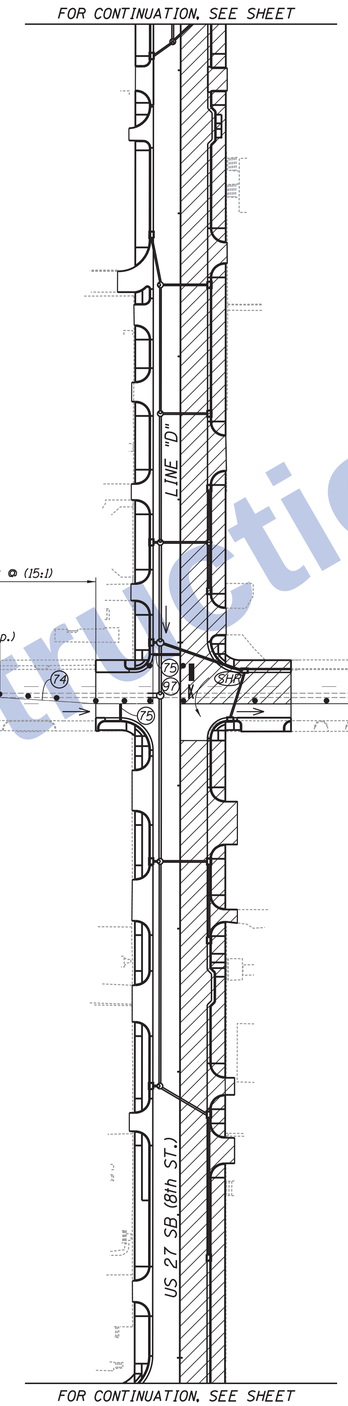

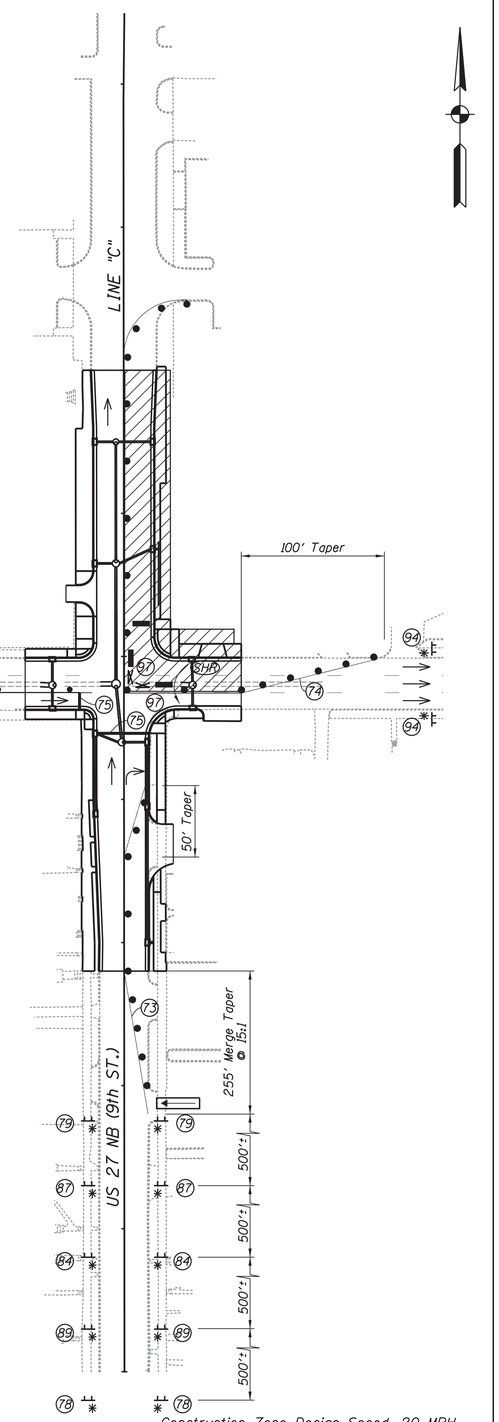

Construction Zone Design Speed: 20 MPH

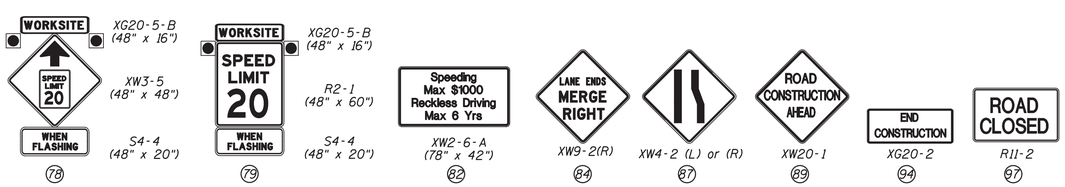

Not for Construction

Clark Dietz ENGINEERS

RECOMMENDED FOR APPROVAL _____ DESIGN ENGINEER DATE

DESIGNED: JAL | DRAWN: MP
CHECKED: RBI | CHECKED: JAL

INDIANA DEPARTMENT OF TRANSPORTATION

MAINTENANCE OF TRAFFIC PHASE IV
US 27

HORIZONTAL SCALE	BRIDGE FILE
1" = 50'	
VERTICAL SCALE	DESIGNATION
NONE	0100701
SURVEY BOOK	SHEETS
	57 of 278
CONTRACT	PROJECT
R-30397	0100701

12:09:37 PM 8/26/2016 P:\0170190\Plans\Mnt\Trf\MOT_US27_N_PH4_11_EB40_N_01.dgn

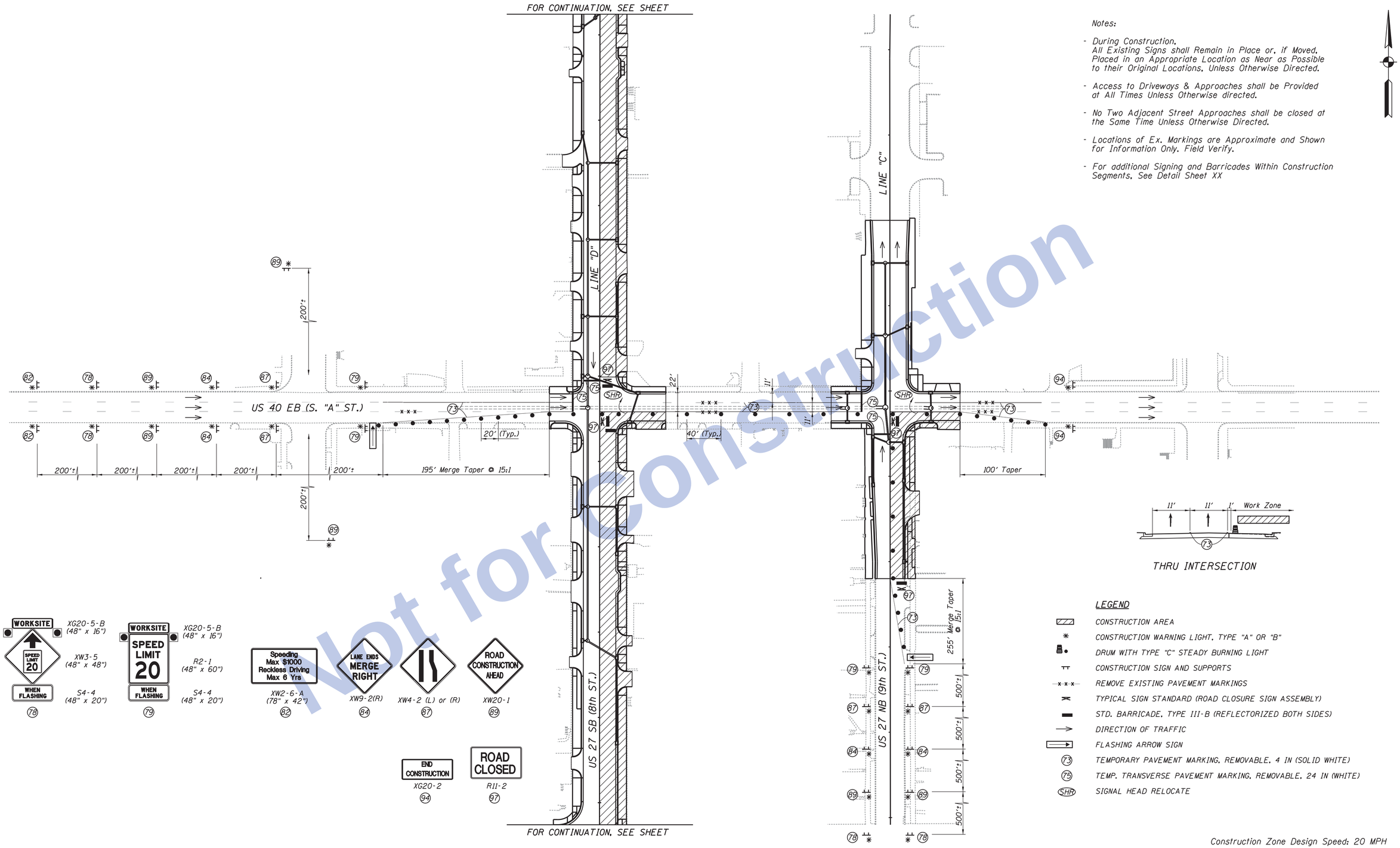

Notes:

- During Construction, All Existing Signs shall Remain in Place or, if Moved, Placed in an Appropriate Location as Near as Possible to their Original Locations, Unless Otherwise Directed.
- Access to Driveways & Approaches shall be Provided at All Times Unless Otherwise directed.
- No Two Adjacent Street Approaches shall be closed at the Same Time Unless Otherwise Directed.
- Locations of Ex. Markings are Approximate and Shown for Information Only. Field Verify.
- For additional Signing and Barricades Within Construction Segments, See Detail Sheet XX

Construction Zone Design Speed: 20 MPH

Not for Construction

Clark Dietz ENGINEERS

RECOMMENDED FOR APPROVAL ____ DESIGN ENGINEER DATE	INDIANA DEPARTMENT OF TRANSPORTATION	HORIZONTAL SCALE 1" = 50'	BRIDGE FILE
		VERTICAL SCALE NONE	DESIGNATION 0100701
DESIGNED: JAL / DRAWN: MP	MAINTENANCE OF TRAFFIC PHASE IV US 27	SURVEY BOOK	SHEETS 58 of 278
CHECKED: RBI / CHECKED: JAL		CONTRACT R-30397	PROJECT 0100701

12:09:39 PM 8/26/2016 P:\0170190\Plans\MnlOTrf\MOT_US27_N_PH4_12_EB40_S_02.dgn

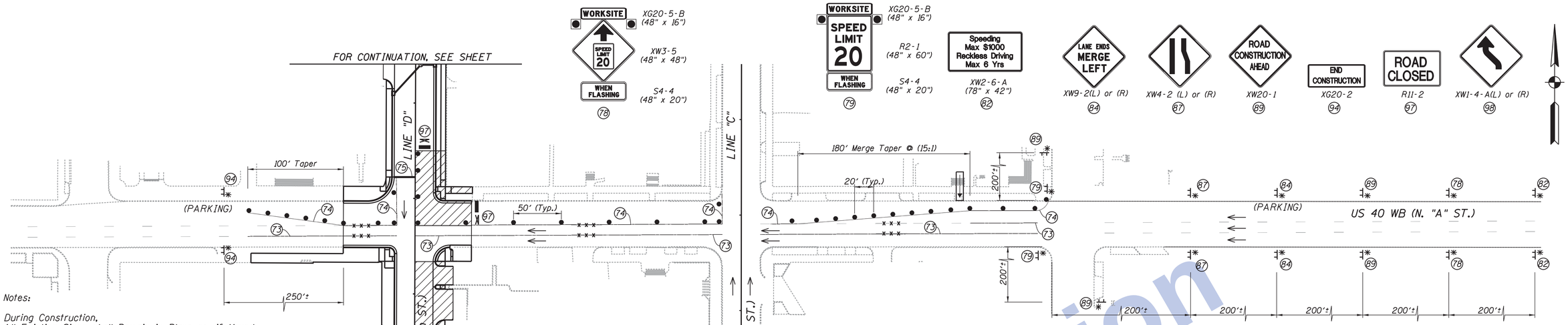

Notes:

- During Construction, All Existing Signs shall Remain in Place or, if Moved, Placed in an Appropriate Location as Near as Possible to their Original Locations, Unless Otherwise Directed.
- Access to Driveways & Approaches shall be Provided at All Times Unless Otherwise directed.
- No Two Adjacent Street Approaches shall be closed at the Same Time Unless Otherwise Directed.
- Locations of Ex. Markings are Approximate and Shown for Information Only. Field Verify.
- For additional Signing and Barricades Within Construction Segments, See Detail Sheet XX

LEGEND

- CONSTRUCTION AREA
- CONSTRUCTION WARNING LIGHT, TYPE "A" OR "B"
- DRUM WITH TYPE "C" STEADY BURNING LIGHT
- CONSTRUCTION SIGN AND SUPPORTS
- REMOVE EXISTING PAVEMENT MARKINGS
- TYPICAL SIGN STANDARD (ROAD CLOSURE SIGN ASSEMBLY)
- STD. BARRICADE, TYPE III-B (REFLECTORIZED BOTH SIDES)
- FLASHING ARROW SIGN
- DIRECTION OF TRAFFIC
- 73 TEMPORARY PAVEMENT MARKING, REMOVABLE, 4 IN (SOLID WHITE)
- 74 TEMPORARY PAVEMENT MARKING, REMOVABLE, 4 IN (SOLID YELLOW)
- 75 TEMP. TRANSVERSE PAVEMENT MARKING, REMOVABLE, 24 IN (WHITE)
- SHR SIGNAL HEAD RELOCATE

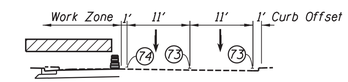

THRU INTERSECTION

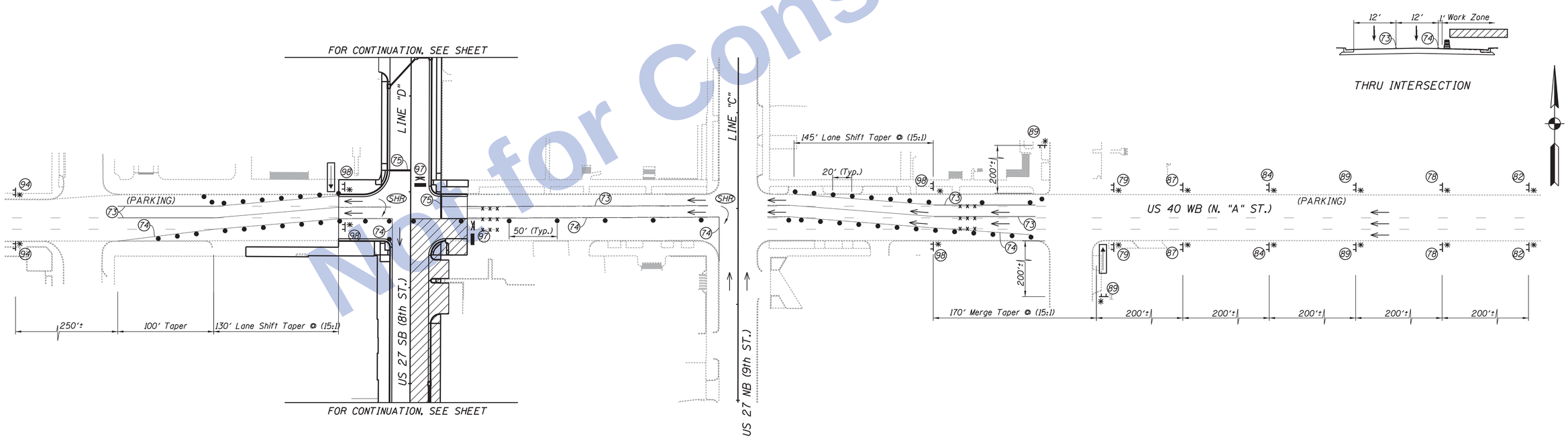

THRU INTERSECTION

Construction Zone Design Speed: 20 MPH

Not for Construction

Clark Dietz ENGINEERS

RECOMMENDED FOR APPROVAL	DESIGN ENGINEER	DATE	
DESIGNED: JAL	DRAWN: MP		
CHECKED: RBI	CHECKED: JAL		

INDIANA
DEPARTMENT OF TRANSPORTATION

MAINTENANCE OF TRAFFIC PHASE IV
US 27

HORIZONTAL SCALE	BRIDGE FILE
1" = 50'	
VERTICAL SCALE	DESIGNATION
NONE	0100701
SURVEY BOOK	SHEETS
	59 of 278
CONTRACT	PROJECT
R-30397	0100701

12:09:41 PM8/26/2016 P:\10170190\Plans\MnOTrf\MOT_US27_N_PH4_13 WB40_NS.dgn

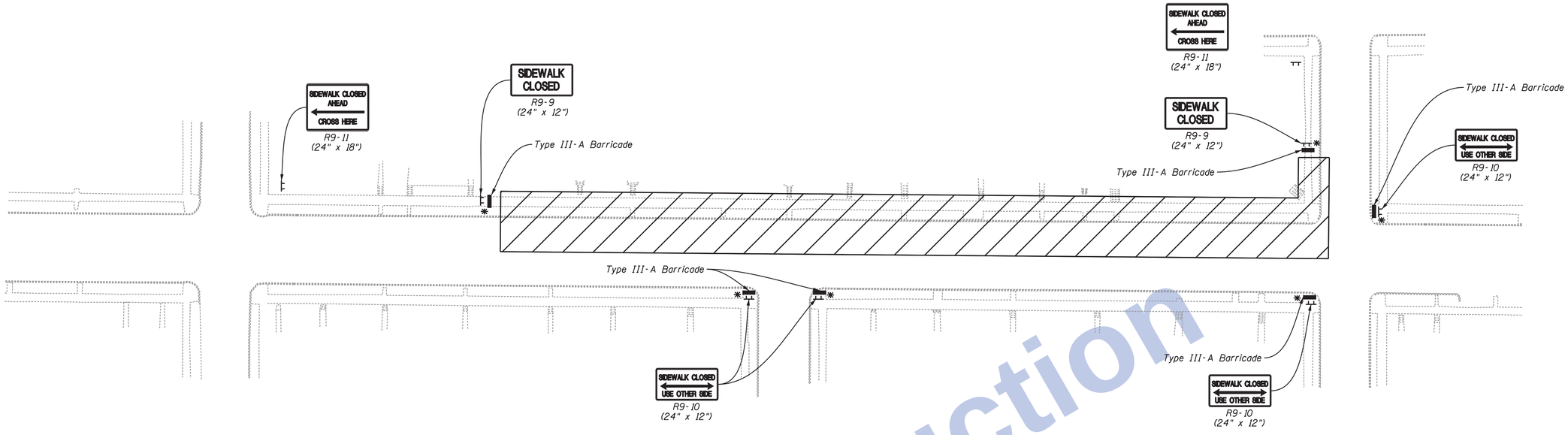

PEDESTRIAN MOT TYPICAL DETAIL

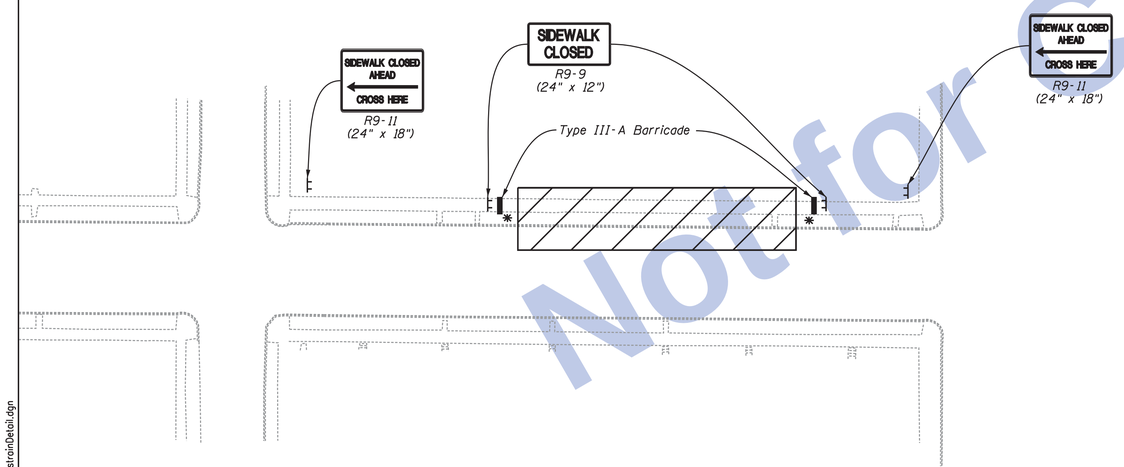

PEDESTRIAN MOT TYPICAL DETAIL
MID-BLOCK CONSTRUCTION ONLY (IF REQ'D)

CONSTRUCTION AREA

CONSTRUCTION WARNING LIGHT, TYPE "A"

CONSTRUCTION SIGN AND SUPPORTS

PAY ITEMS - PEDESTRIAN MOT	PER BLOCK	PHASE IA	PHASE IB	PHASE IC	PHASE ID	PHASE IE	PHASE II	PHASE IIIA	PHASE IIIB	PHASE IV	PHASE V	QUANTITY TOTAL	UNIT
BLOCKS OF SIDEWALK NEEDING PEDESTRIAN MOT		1	2	1	2	9	24	19	3	18	2		
CONSTRUCTION SIGN, B	9	9	18	9	18	81	216	171	27	162	18	216	EA
BARRICADE, III-A	72	72	144	72	144	648	1728	1368	216	1296	144	1,728	LFT

SIGN IDENTIFICATION TABLE - PEDESTRIAN MOT PER BLOCK

SIGN CODE	MESSAGE	TYPE	QUANTITY
R9-9	SIDEWALK CLOSED	B	2
R9-10	SIDEWALK CLOSED - USE OTHER SIDE	B	5
R9-11	SIDEWALK CLOSED AHEAD - CROSS HERE	B	2
Subtotal	Construction Sign, Type B		9

Typical quantities req'd for one block of pedestrian MOT.

Notes
1) An alternate pedestrian access route is required when an existing pedestrian circulation path is temporarily closed byconstruction, alteration, maintenance, or other condition.
2) The details on this sheet show the minimum required signage required for pedestrian MOT. The displayed signing and barricades are required in addition to the MOT requirements for vehicular traffic.
3) For overnight sidewalk closures, Type A Flashing warning lights shall be used on barricades that support signs and close sidewalks.
4) Pedestrian traffic signal displays controlling closed crosswalks shall be covered or deactivated.

Not for Construction

Clark Dietz
ENGINEERS

RECOMMENDED FOR APPROVAL _____ DESIGN ENGINEER DATE

DESIGNED: RBI DRAWN: MP
CHECKED: JAL CHECKED: RBI

INDIANA
DEPARTMENT OF TRANSPORTATION

MAINTENANCE OF TRAFFIC
PEDESTRIAN ACCESS

HORIZONTAL SCALE	BRIDGE FILE
N/A	
VERTICAL SCALE	DESIGNATION
N/A	0100701
SURVEY BOOK	SHEETS
	60 of 278
CONTRACT	PROJECT
R-30397	0100701

12:09:43 PM8/26/2016 P:\10170190\Plans\MnOTrf\MOT_PedestrainDetail.dgn

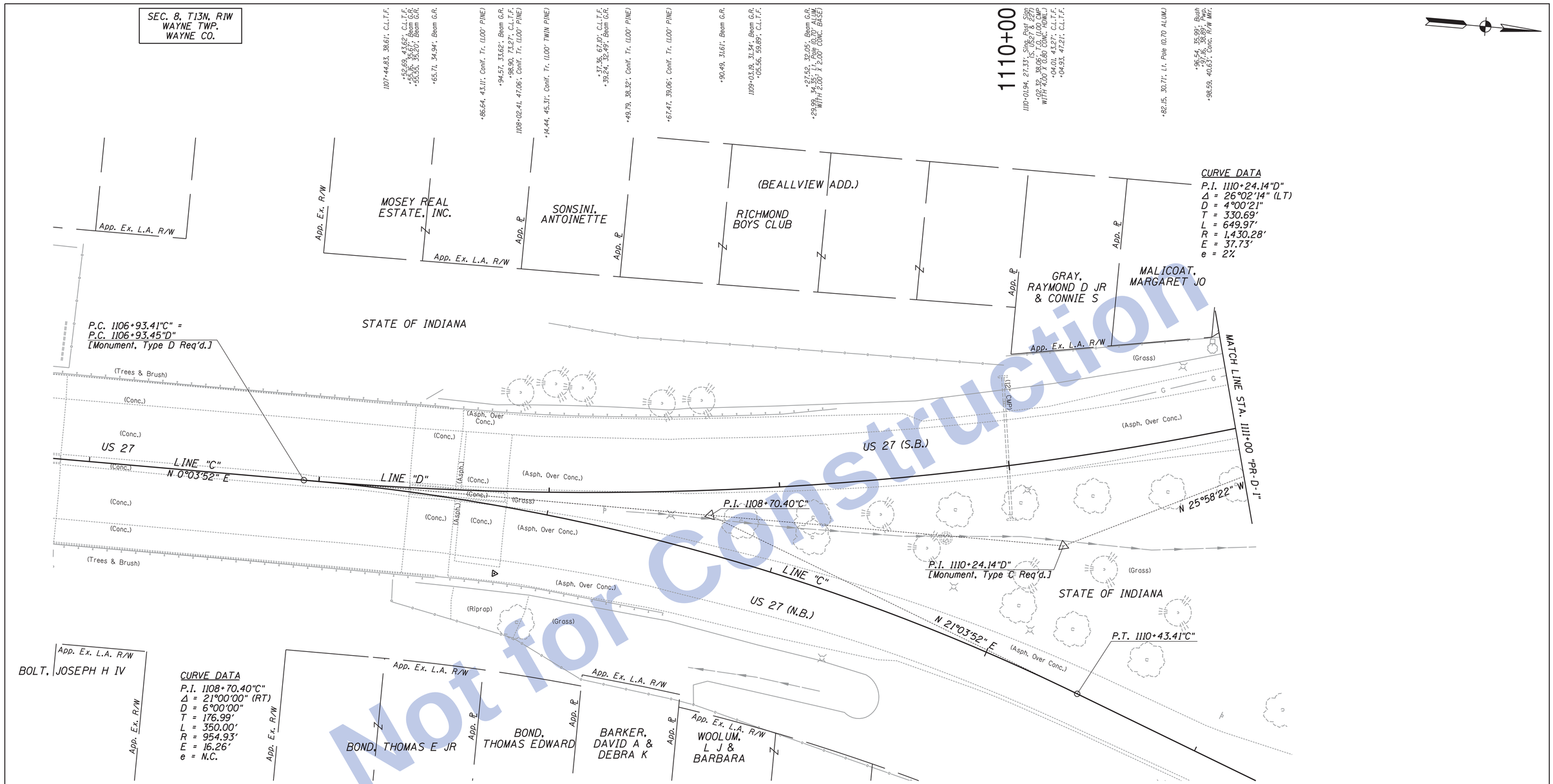

1107+44.83, 38.61'; C.L.T.F.
+52.69, 43.62'; C.L.T.F.
+55.16, 35.67'; Beam G.R.
+55.55, 35.26'; Beam G.R.
+65.71, 34.94'; Beam G.R.
+86.64, 43.11'; Conif. Tr. (1.00' PINE)
+94.57, 33.62'; Beam G.R.
+98.90, 73.27'; C.L.T.F.
1108+02.41, 47.06'; Conif. Tr. (1.00' PINE)
+14.44, 45.31'; Conif. Tr. (1.00' TWIN PINE)
+37.36, 67.10'; C.L.T.F.
+39.24, 32.49'; Beam G.R.
+49.79, 38.32'; Conif. Tr. (1.00' PINE)
+67.47, 39.06'; Conif. Tr. (1.00' PINE)
+90.49, 31.61'; Beam G.R.
1109+03.19, 31.34'; Beam G.R.
+05.56, 99.89'; C.L.T.F.
+27.52, 32.05'; Beam G.R.
+29.99, 34.55'; 1" Pipe (0.70 ALUM.) WITH 2.00' X 2.00' CONC. BASE)
1110+01.94, 27.33'; Sing. Post Sign (S. US 27 & 22ND)
+02.32, 38.06'; 1" Pipe (0.70 ALUM.) WITH 4.00' X 0.80' CONC. HDWL.)
+04.01, 43.27'; C.L.T.F.
+04.93, 41.21'; C.L.T.F.
+82.15, 30.71'; Lt. Pole (0.70 ALUM.)
+96.54, 35.99'; Bush
+97.16, 38.69'; Pwp.
+98.59, 40.63'; Conc. R/W Mkr.

1107+29.94, 0.06'; Beam G.R. (CONC.)
+34.45, 40.29'; C.L.T.F.
+34.54, 50.00'; C.L.T.F.
+52.06, 38.67'; Beam G.R.
+52.68, 38.04'; Beam G.R.
+59.65, 56.30'; C.L.T.F.
+68.04, 38.94'; Beam G.R.
+85.78, 63.63'; C.L.T.F.
+87.07, 56.66'; Decid. Tr. (2.00 ASH CLUMP)
+95.09, 42.01'; Beam G.R.
1108+13.00, 45.33'; Beam G.R.
+13.94, 81.20'; C.L.T.F.
+23.66, 7.39'; Sing. Post Sign (DIVIDED ROAD)
+36.88, 50.25'; Beam G.R.
+48.57, 52.78'; Beam G.R.
+51.90, 30.42'; C.L.T.F.
+57.96, 82.31'; C.L.T.F.
+59.94, 92.88'; C.L.T.F.
+82.63, 13.96'; Decid. Tr. (0.20 CRABAPPLE)
1109+12.75, 22.72'; Decid. Tr. (0.20 CRABAPPLE)
+18.35, 75.33'; Lt. Pole (0.70 ALUM.)
+19.42, 45.94'; C.L.T.F.
+11.62, 14.09'; Decid. Tr. (0.10 CRABAPPLE)
+42.61, 15.12'; Decid. Tr. (0.15 CRABAPPLE)
+60.94, 31.56'; Conif. Tr. (0.15 CEDAR)
+63.46, 28.07'; Sen. MB.
+70.49, 49.44'; Lt. Pole (0.30 CRABAPPLE)
+74.79, 16.32'; Decid. Tr. (0.20 CRABAPPLE)
+86.62, 60.84'; Decid. Tr. (0.30 CRABAPPLE)
+89.12, 45.37'; 1" Pipe (0.70 ALUM.) WITH 4.00' X 0.80' CONC. HDWL.)
+99.90, 71.92'; Lt. Pole (0.70 ALUM.)
+100.13, 74.96'; Conif. Tr. (0.50 SPRUCE)
+101.16, 47.16'; Decid. Tr. (0.20 CRABAPPLE)
+106.49, 11.44'; Lt. Pole (0.70 ALUM. 2.00 DIA. CONC. BASE)
+17.46, 74.09'; Decid. Tr. (0.30 CRABAPPLE)
+33.94, 50.40'; Conif. Tr. (0.50 SPRUCE)
+34.02, 18.18'; Decid. Tr. (0.30 CRABAPPLE)
+45.63, 92.01'; Decid. Tr. (0.20 CRABAPPLE)
+61.34, 74.07'; Conif. Tr. (0.40 PINE)
+65.95, 21.73'; Decid. Tr. (0.40 CRABAPPLE)
+95.06, 23.86'; Decid. Tr. (0.30 CRABAPPLE)

ALL TOPOGRAPHY DESCRIBED FROM LINE "D", EXCEPT AS SHOWN.

Clark Dietz
ENGINEERS

RECOMMENDED FOR APPROVAL _____ DESIGN ENGINEER DATE

DESIGNED: JAL DRAWN: MP
CHECKED: RBI CHECKED: JAL

INDIANA
DEPARTMENT OF TRANSPORTATION

EXISTING TOPOGRAPHY
US 27 SOUTHBOUND

HORIZONTAL SCALE	BRIDGE FILE
1" = 20'	
VERTICAL SCALE	DESIGNATION
NONE	0100701
SURVEY BOOK	SHEETS
	61 of 278
CONTRACT	PROJECT
R-30397	0100701

1:44:58 PM 8/26/2016 P:\0170190\Plans\Existing\01_EX_US27_SB_100.dgn

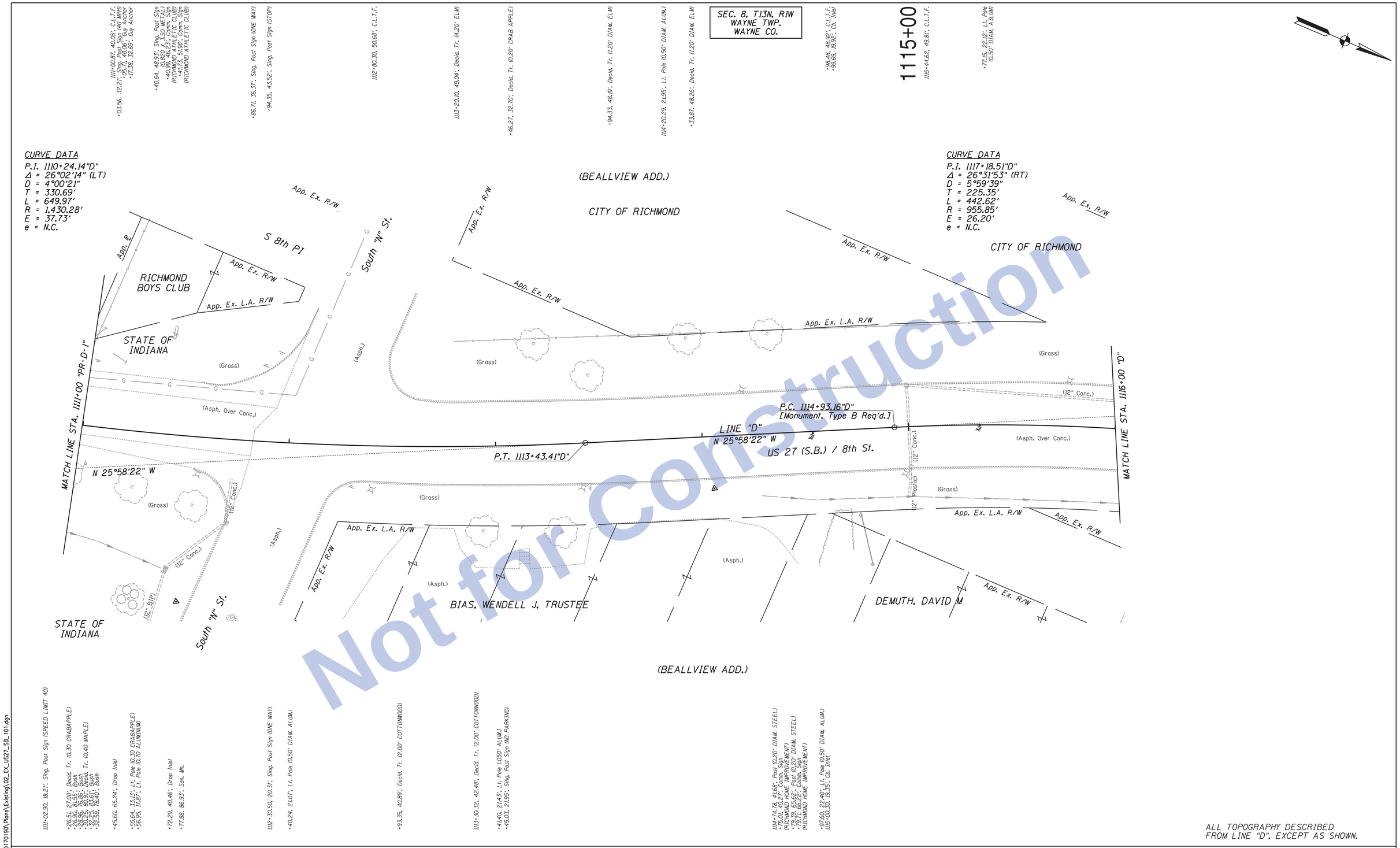

Not for Construction

ALL TOPOGRAPHY DESCRIBED
FROM LINE "D", EXCEPT AS SHOWN.

Clark Dietz
ENGINEERS

RECOMMENDED FOR APPROVAL _____ DESIGN ENGINEER DATE

DESIGNED: JAL | DRAWN: MP
CHECKED: RBI | CHECKED: JAL

INDIANA
DEPARTMENT OF TRANSPORTATION

EXISTING TOPOGRAPHY
US 27 SOUTHBOUND

HORIZONTAL SCALE	BRIDGE FILE
1" = 20'	
VERTICAL SCALE	DESIGNATION
NONE	0100701
SURVEY BOOK	SHEETS
	62 of 278
CONTRACT	PROJECT
R-30397	0100701

12:09:49 PM 8/26/2016 P:\0170190\Plans\Existing\02_EX_US27_SB_101.dgn

SEC. 8, T13N, R1W
WAYNE TWP.
WAYNE CO.

1120+00

1116+58.91, 40.81', C.L.T.F.

1117+22.83, 19.54', Cb. Inlet
+25.32, 44.13', C.L.T.F.
+32.81, 24.00', Lt. Pole (0.50' DIAM. ALUM.)
+39.73, 27.93', Sing. Post Sign (ONE WAY)
+43.69, 31.57', Sing. Post Sign (S. W ST. S. 8TH. ST.)
+49.37, 37.52', Sing. Post Sign (STOP)

+97.00, 49.59', Hedge

1118+05.30, 42.10', Hedge

+35.05, 23.43', Sing. Post Sign (NO PARKING HERE TO CORNER)

+52.51, 22.13', Lt. Pole (0.50' DIAM.ALUM.)
+54.47, 36.23', Hedge

+76.15, 34.31', Ret. Wall (STONE)
+76.22, 35.38', Ret. Wall (STONE)
+76.42, 35.50', Hedge

+94.29, 21.39', Wat. S.O.

1119+05.43, 33.74', Ret. Wall (STONE)
+05.73, 32.75', Ret. Wall (STONE)
+09.06, 34.71', Hedge
+12.22, 34.97', Ret. Wall (STONE)
+12.36, 33.72', Ret. Wall (STONE)
+12.84, 36.79', Ret. Wall (STONE)
+13.12, 32.87', Ret. Wall (STONE)
+13.26, 36.46', Ret. Wall (STONE)
+13.79, 32.51', T. I.F.

+78.88, 22.11', Minox. (0.30' X 0.30' WOOD)
+81.67, 22.24', Lt. Pole (0.50' DIAM. ALUM.)

+93.35, 34.87', Post (0.30' X 0.30' WOOD)
(AMERICAN LEGION HOWARD THOMAS POST #315)
+93.59, 35.11', Comm. Sign
+96.83, 41.03', Comm. Sign
(AMERICAN LEGION HOWARD THOMAS POST #315)
+99.05, 40.54', Post (0.30' X 0.30' WOOD)
1120+11.55, 34.82', Wat. Meter
+12.65, 33.11', Bush
+12.65, 33.22', Bush
+13.84, 33.08', Bush
+13.84, 33.56', Bush
+23.80, 33.17', Bush
+30.21, 24.85', Drop Inlet
+30.58, 33.01', Bush
+34.11, 33.17', Bush

+45.25, 33.42', Bush
+48.67, 33.30', Bush
+52.12, 33.42', Bush
+56.06, 33.55', Bush
+59.83, 33.63', Bush
+62.81, 33.82', Bush
+67.21, 33.83', Bush

+72.45, 25.85', Sing. Post Sign (SPEED LIMIT 35)

+84.15, 40.33', Flag Pole (0.60' ALUM.)

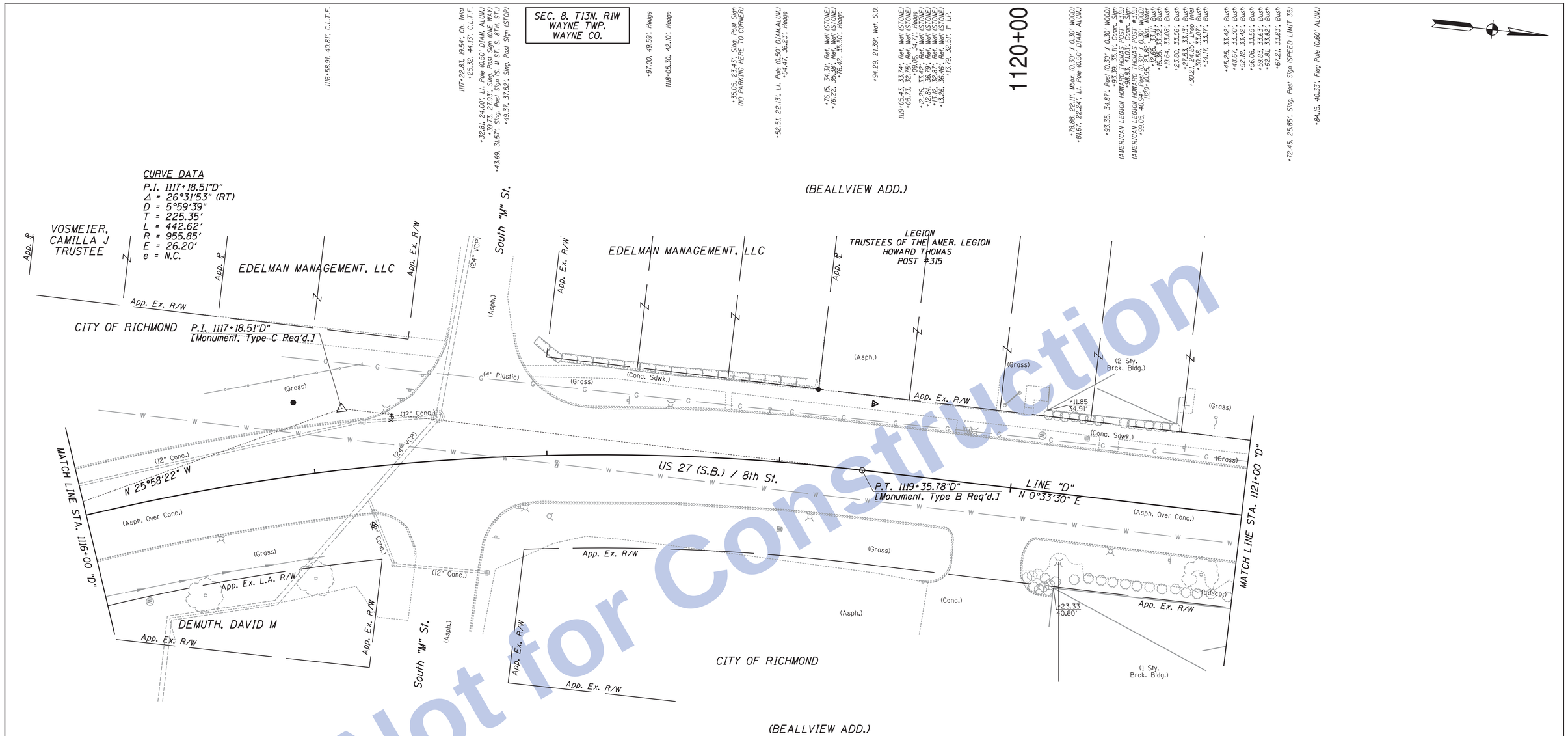

Not for Construction

1116+18.85, 42.25', Wat. Meter

+43.87, 44.41', Decid. Tr. (0.40' REDBUD)

+55.40, 21.72', Lt. Pole (0.50' DIAM. ALUM)

+94.34, 44.88', Decid. Tr. (0.40' REDBUD)

1117+23.37, 19.33', Cb. Inlet

+71.50, 49.38', Drop Inlet
+76.27, 34.59', Sing. Post Sign (STOP)

+87.36, 22.34', Sing. Post Sign (ONE WAY)
+90.00, 22.18', Lt. Pole (0.50' DIAM. ALUM.)

1118+00.42, 26.09', F. Hyd.
+04.04, 3.45', Wat. S.O.
+04.10, 3.71', Wat. S.O.

1119+02.51, 28.63', Stump (4.00' DIAM. STUMP)

+15.35, 22.30', Lt. Pole (0.60' DIAM. ALUM.)

+67.37, 44.18', Sing. Post Sign (FIRE DEPT. PARKING ONLY)

1120+11.55, 37.46', Bush
+12.70, 36.44', Bush
+16.06, 41.82', Bush
+16.08, 35.38', Bush
+16.45, 40.46', Bush
+19.22, 41.94', Bush
+19.28, 36.88', Bush
+21.24, 41.94', Bush
+21.61, 36.94', Bush
+23.95, 37.77', Bush
+24.23, 29.27', Decid. Tr. (4.00' ELM)
+31.82, 35.99', Bush
+37.82, 34.71', Bush
+43.39, 34.90', Bush
+45.35, 22.08', Lt. Pole (0.60' ALUM)
+46.90, 35.09', Bush
+53.89, 35.24', Bush

+58.90, 35.54', Bush

+64.37, 35.31', Bush
+69.77, 35.49', Bush
+71.90, 22.86', Sing. Post Sign (SPEED LIMIT 35)
+75.49, 34.85', Bush

+80.21, 35.82', Bush

+85.01, 35.78', Bush
+87.14, 27.41', Decid. Tr. (2.00' ELM)
+91.01, 35.16', Bush

+98.15, 35.50', Bush

ALL TOPOGRAPHY DESCRIBED FROM LINE "D", EXCEPT AS SHOWN.

12:09:50 PM 8/26/2016 P:\0170190\Plans\Existing\03_EX_US27_SB_102.dgn

Clark Dietz
ENGINEERS

RECOMMENDED FOR APPROVAL _____ DESIGN ENGINEER DATE

DESIGNED: JAL DRAWN: MP
CHECKED: RBI CHECKED: JAL

INDIANA
DEPARTMENT OF TRANSPORTATION

EXISTING TOPOGRAPHY
US 27 SOUTHBOUND

HORIZONTAL SCALE	BRIDGE FILE
1" = 20'	
VERTICAL SCALE	DESIGNATION
NONE	0100701
SURVEY BOOK	SHEETS
	63 of 278
CONTRACT	PROJECT
R-30397	0100701

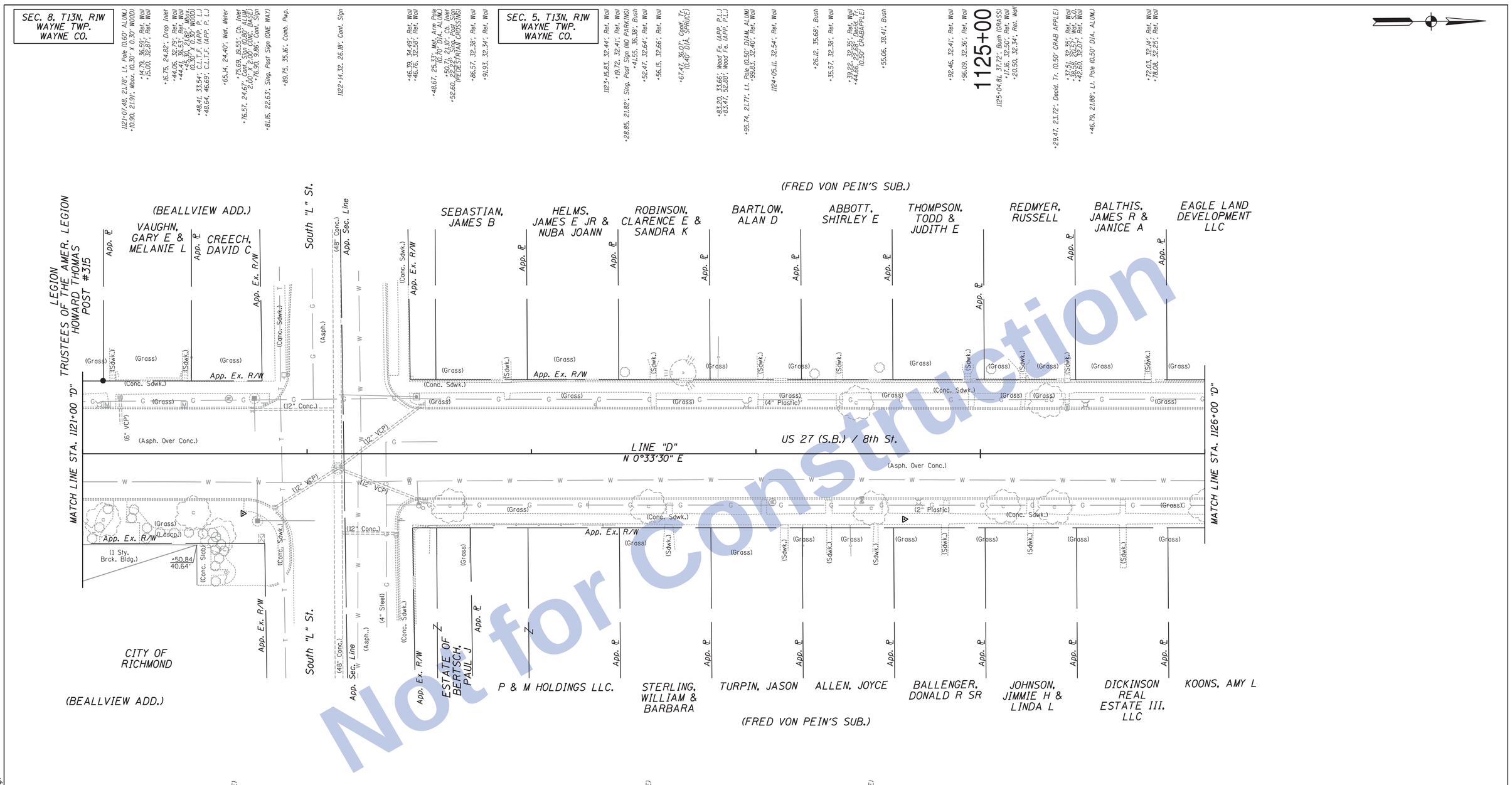

Not for Construction

TBM #31: Cut "X" in W Bolt F. Hyd. @ NE Cor. S "L" St. & S 8th St. Sta. 1122+49.7"D", 23.2' Rt. Adjusted El. = 983.2890

ALL TOPOGRAPHY DESCRIBED FROM LINE "D", EXCEPT AS SHOWN.

Clark Dietz ENGINEERS

RECOMMENDED FOR APPROVAL _____ DESIGN ENGINEER DATE

DESIGNED: JAL DRAWN: MP
CHECKED: RBI CHECKED: JAL

INDIANA DEPARTMENT OF TRANSPORTATION

EXISTING TOPOGRAPHY
US 27 SOUTHBOUND

HORIZONTAL SCALE	BRIDGE FILE
1" = 20'	
VERTICAL SCALE	DESIGNATION
NONE	0100701
SURVEY BOOK	SHEETS
	64 of 278
CONTRACT	PROJECT
R-30397	0100701

12:09:52 PM 8/26/2016 P:\0170190\Plans\Existing\04_EX_US27_SB_103.dgn

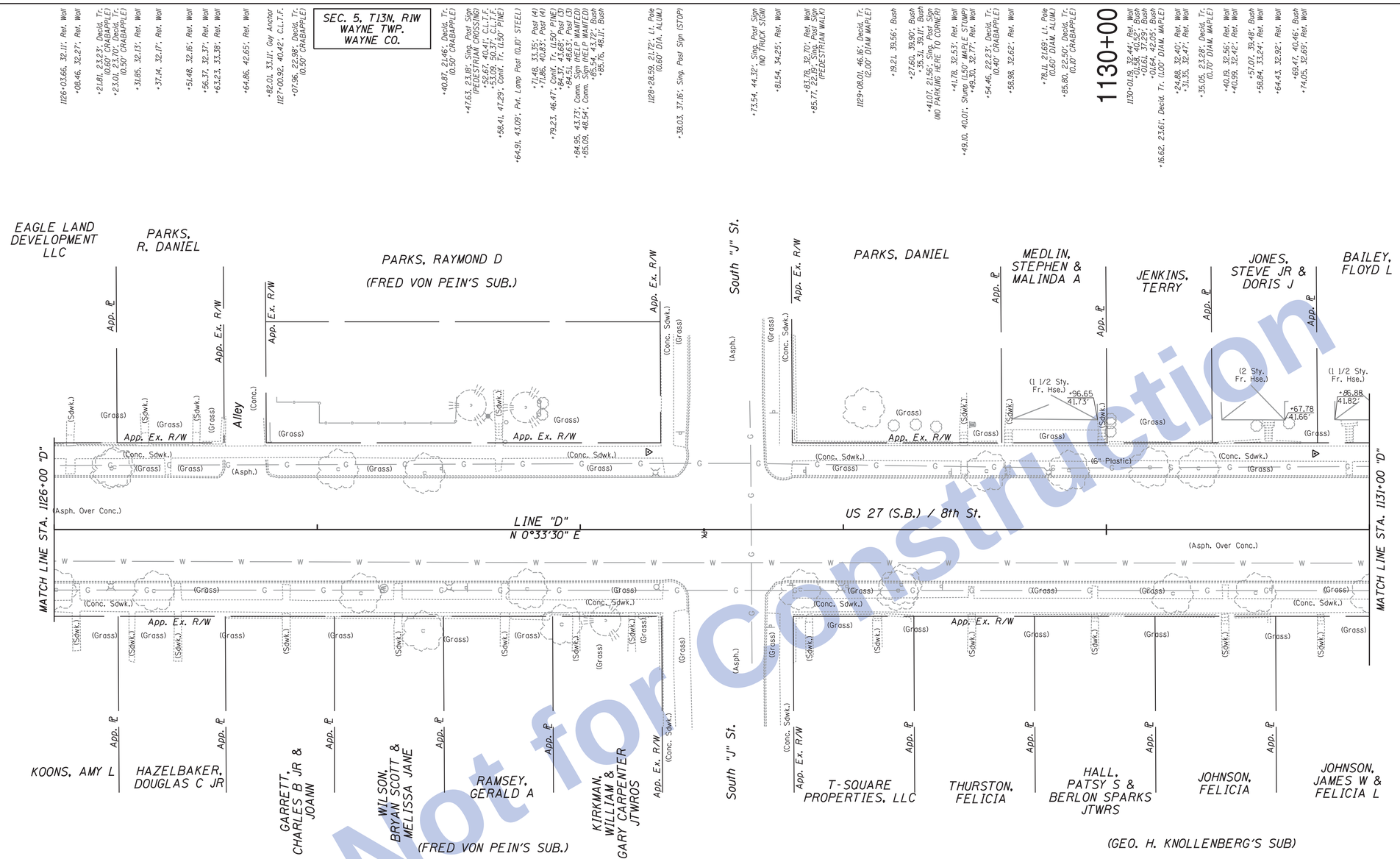

Not for Construction

1126+03.66, 32.11; Ret. Wall
+08.46, 32.27; Ret. Wall
+21.81, 23.23; Decid. Tr. (0.60" CRABAPPLE)
+23.01, 23.70; Decid. Tr. (0.50" CRABAPPLE)
+31.85, 32.13; Ret. Wall
+37.14, 32.17; Ret. Wall
+51.48, 32.16; Ret. Wall
+56.37, 32.37; Ret. Wall
+63.23, 33.38; Ret. Wall
+64.86, 42.65; Ret. Wall
+82.01, 33.11; Guy Anchor
1127+00.92, 40.42; C.L.T.F.
+07.96, 22.98; Decid. Tr. (0.50" CRABAPPLE)
+40.87, 21.46; Decid. Tr. (0.50" CRABAPPLE)
+47.63, 23.18; Sing. Post Sign (PEDESTRIAN CROSSING)
+52.81, 40.41; C.L.T.F.
+53.98, 50.37; C.L.T.F.
+58.41, 47.29; Conif. Tr. (1.50" PINE)
+64.91, 43.09; Pvt. Lamp Post (0.10" STEEL)
+71.48, 33.35; Post (4)
+71.86, 40.83; Post (4)
+79.23, 46.47; Conif. Tr. (1.50" PINE)
+84.37, 43.68; Post (3)
+84.51, 48.63; Post (3)
+84.95, 43.73; Comm. Sign (NEL.P. WANTED)
+85.09, 48.54; Comm. Sign (NEL.P. WANTED)
+85.46, 43.72; Bush
+85.76, 48.11; Bush
1128+28.59, 21.72; Lt. Pole (0.60" DIA. ALUM.)
+38.03, 37.16; Sing. Post Sign (STOP)
+73.54, 44.32; Sing. Post Sign (NO TRUCK SIGN)
+81.54, 34.25; Ret. Wall
+83.78, 32.70; Ret. Wall
+85.77, 22.28; Sing. Post Sign (PEDESTRIAN WALK)
1129+08.01, 46.16; Decid. Tr. (2.00" DIAM MAPLE)
+19.21, 39.56; Bush
+27.60, 39.90; Bush
+35.31, 39.11; Bush
+41.07, 21.56; Sing. Post Sign (NO PARKING HERE TO CORNER)
+41.78, 32.53; Ret. Wall
+49.10, 40.01; Stump (1.50" MAPLE STUMP)
+49.30, 32.77; Ret. Wall
+54.46, 22.23; Decid. Tr. (0.40" CRABAPPLE)
+58.98, 32.62; Ret. Wall
+78.11, 21.69; Lt. Pole (0.60" DIAM. ALUM.)
+85.80, 22.50; Decid. Tr. (0.70" CRABAPPLE)
1130+01.19, 32.44; Ret. Wall
+01.58, 40.52; Bush
+01.61, 37.29; Bush
+01.64, 42.85; Bush
+16.62, 23.61; Decid. Tr. (1.00" DIAM. MAPLE)
+24.88, 32.40; Ret. Wall
+31.35, 32.47; Ret. Wall
+35.05, 23.28; Decid. Tr. (0.70" DIAM. MAPLE)
+40.19, 32.56; Ret. Wall
+40.99, 32.72; Ret. Wall
+57.07, 39.48; Bush
+56.84, 33.24; Ret. Wall
+64.43, 32.92; Ret. Wall
+69.47, 40.46; Bush
+74.05, 32.69; Ret. Wall

1126+00.80, 22.90; Decid. Tr. (0.50" CRABAPPLE)
+21.53, 21.51; Lt. Pole (0.50" DIA. ALUM.)
+37.92, 23.32; Decid. Tr. (0.50" CRABAPPLE)
+65.76, 33.30; Ret. Wall
+86.50, 33.21; Ret. Wall
+89.99, 33.20; Ret. Wall
1127+16.61, 24.19; Decid. Tr. (1.20" MAPLE)
+25.34, 22.37; Wtl. Meter
+28.20, 33.15; Ret. Wall
+34.65, 33.13; Ret. Wall
+40.31, 38.50; Decid. Tr. (0.40" CRABAPPLE)
+50.15, 21.91; Lt. Pole (0.50" DIAM. ALUM.)
+57.07, 22.11; Sing. Post Sign (PEDESTRIAN CROSSING)
+63.09, 32.90; Ret. Wall
+73.81, 33.04; Ret. Wall
+79.82, 22.58; Decid. Tr. (0.40" CRABAPPLE)
+84.68, 32.95; Ret. Wall
+88.52, 31.86; Ret. Wall
+92.99, 36.05; Decid. Tr. (1.00" BIRCH)
+95.61, 31.71; Ret. Wall
1128+01.27, 31.87; Ret. Wall
+09.60, 34.55; Conif. Tr. (1.0" SPRUCE)
+16.53, 32.00; Ret. Wall
+22.38, 32.01; Ret. Wall
+28.95, 21.77; F. Hyd.
+30.57, 31.98; Ret. Wall
+72.29, 37.16; Sing. Post Sign (STOP SIGN)
+80.10, 21.28; Sing. Post Sign (ONEWAY)
+81.19, 32.39; Ret. Wall
+83.74, 22.80; Decid. Tr. (2.5 DIA. SYC.)
+85.14, 32.44; Ret. Wall
+89.20, 32.36; Ret. Wall
+98.92, 22.16; Lt. Pole (0.50 DIA. ALUMINUM)
1129+01.83, 21.62; Sing. Post Sign (PED SIGN)
+10.44, 32.24; Ret. Wall
+15.87, 32.04; Ret. Wall
+20.86, 23.17; Decid. Tr. (2.5. SYCAMORE)
+22.08, 20.98; Decid. Tr.
+26.73, 32.64; Ret. Wall
+37.67, 21.55; Sing. Post Sign (NO PARKING)
+72.46, 32.41; Ret. Wall
+93.87, 32.30; Ret. Wall
+97.99, 32.91; Ret. Wall
1130+25.37, 24.30; Decid. Tr. (1.00" ELM)
+41.63, 32.45; Ret. Wall
+48.69, 32.38; Ret. Wall
+56.80, 24.10; Decid. Tr. (2.00" SYCAMORE)
+62.49, 32.22; Ret. Wall
+62.98, 22.78; Sing. Post Sign (SPEED LIMIT 35)

ALL TOPOGRAPHY DESCRIBED FROM LINE "D", EXCEPT AS SHOWN.

Clark Dietz ENGINEERS

RECOMMENDED FOR APPROVAL _____ DESIGN ENGINEER DATE

DESIGNED: JAL | DRAWN: MP
CHECKED: RBI | CHECKED: JAL

INDIANA
DEPARTMENT OF TRANSPORTATION

EXISTING TOPOGRAPHY
US 27 SOUTHBOUND

HORIZONTAL SCALE	BRIDGE FILE
1" = 20'	
VERTICAL SCALE	DESIGNATION
NONE	0100701
SURVEY BOOK	SHEETS
	65 of 278
CONTRACT	PROJECT
R-30397	0100701

12:09:54 PM 8/26/2016 P:\0170190\Plans\Existing\05_EX_US27_SB_104.dgn

SEC. 5, T13N, R1W
WAYNE TWP.
WAYNE CO.

1135+00

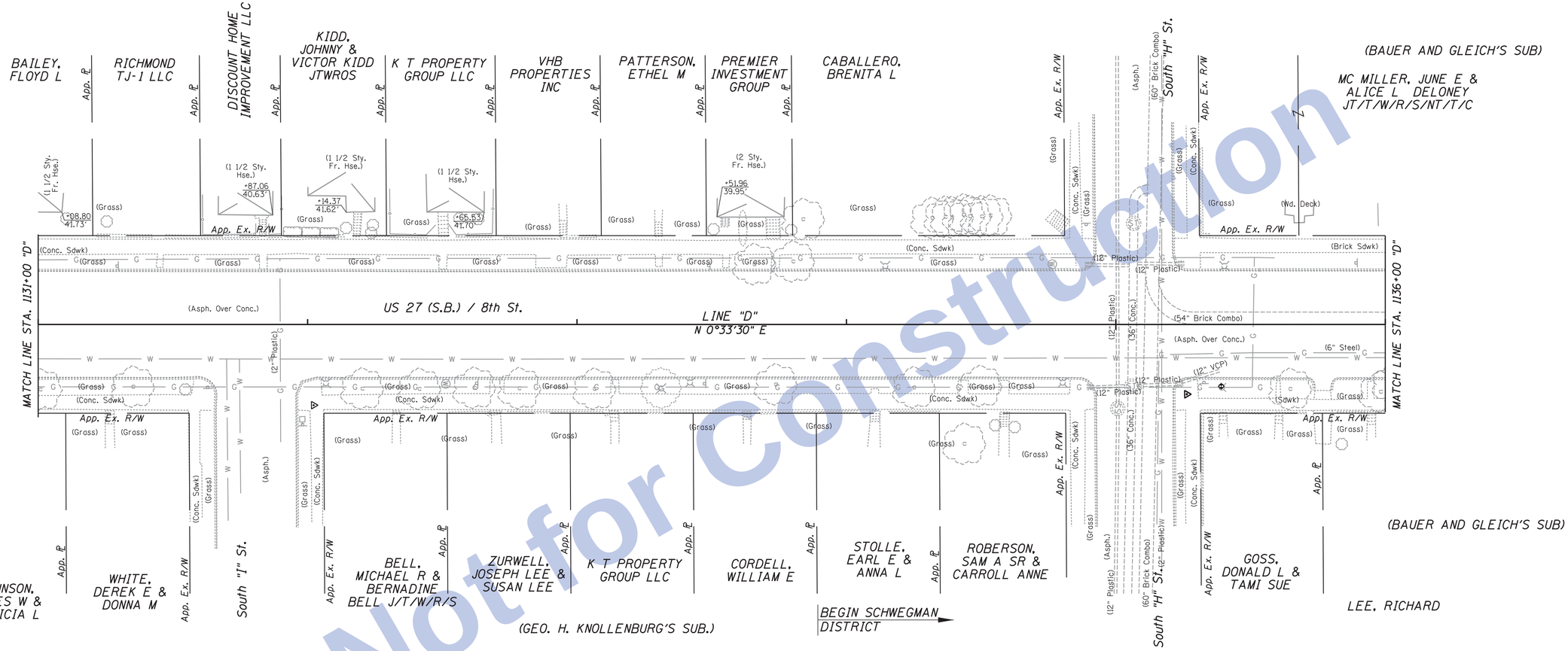

1131+10.49, 39.35', Bush
+21.79, 32.39', Ret. Wall
+25.45, 38.26', Bush
+29.74, 21.67', Sing. Post Sign (SPEED LIMIT 35)
+42.60, 32.28', Ret. Wall
+46.86, 31.98', Ret. Wall
+61.08, 48.13', C.L.T.F. (APP. PL)
+61.16, 33.27', C.L.T.F. (APP. PL)
+80.87, 37.42', C.L.T.F.
+80.88, 33.43', C.L.T.F.
+81.93, 32.23', Ret. Wall
+84.91, 32.14', Ret. Wall
+85.69, 37.37', C.L.T.F.
+85.74, 33.33', C.L.T.F.
+90.38, 33.55', C.L.T.F. (APP. PL)
+90.45, 47.82', C.L.T.F. (APP. PL)
+90.61, 32.22', Ret. Wall
+91.13, 23.54', Ret. Wall (GRASS)
+91.91, 32.12', Ret. Wall
+92.09, 32.36', Ret. Wall
1132+12.68, 33.82', Hedge
+13.95, 32.44', Ret. Wall
+14.33, 35.84', Bush
+23.01, 32.41', Ret. Wall
+23.61, 34.01', Bush
+24.43, 32.38', Bush
+30.56, 50.38', C.L.T.F. (APP. PL)
+30.71, 33.54', C.L.T.F. (APP. PL)
+44.11, 33.16', C.L.T.F.
+44.60, 32.01', Ret. Wall
+47.95, 37.18', C.L.T.F.
+52.50, 37.14', C.L.T.F.
+55.20, 33.25', C.L.T.F.
+55.29, 32.36', Ret. Wall
+56.93, 39.38', Bush
+61.91, 39.16', Bush
+68.33, 32.37', Ret. Wall
+68.72, 33.66', C.L.T.F. (APP. PL)
+69.05, 50.31', C.L.T.F. (APP. PL)
+73.03, 32.10', Ret. Wall
+92.57, 31.81', Ret. Wall
+97.21, 32.11', Ret. Wall
1133+07.30, 32.17', Ret. Wall
+49.36, 21.86', Sing. Post Sign (WALK/WAIT)
+50.68, 35.35', Bush
+65.92, 22.38', Decid. Tr. (0.50' MAPLE)
+79.53, 35.02', Bush
+80.32, 23.41', Decid. Tr. (0.50' MAPLE)
+84.04, 39.10', Decid. Tr. (0.50' QUAD BIRCH TREE)
1134+14.41, 21.68', Lt. Pole (0.50' DIAM. ALUM)
+31.95, 39.58', Decid. Tr. (0.50' MAPLE)
+36.88, 39.99', Decid. Tr. (1.20' TWIN MAPLE)
+39.23, 39.81', Decid. Tr. (0.50' MAPLE)
+43.65, 40.80', Decid. Tr. (0.50' MAPLE)
+45.92, 40.24', Decid. Tr. (1.00' MAPLE)
+50.34, 40.15', Decid. Tr. (1.20'TWIN MAPLE)
+53.59, 40.46', Decid. Tr. (0.50' MAPLE)
+76.42, 22.38', Wat. Meter
+89.02, 37.61', Sing. Post Sign (STOP)
+89.83, 22.07', Cb. Inlet
1135+24.23, 22.49', Cb. Inlet
+31.75, 32.85', Ret. Wall
+34.87, 32.99', Ret. Wall
+40.28, 21.70', Lt. Pole (0.60' DIAM. ALUM)
+62.88, 40.73', Wd. Deck
+63.09, 40.13', Wd. Deck
+66.18, 40.30', Wd. Deck
+66.23, 37.69', Wd. Deck
+70.04, 40.34', Wd. Deck
+70.19, 40.81', Wd. Deck
+73.47, 40.43', Wd. Deck
+73.80, 40.39', Wd. Deck
+89.62, 22.84', Sing. Post Sign (NO PARKING HERE TO CORNER)
+97.35, 44.96', C.L.T.F. (APP. PL)
+97.54, 35.93', C.L.T.F. (APP. PL)
1131+00.94, 24.15', Decid. Tr. (1.20' SYCAMORE)
+35.34, 23.12', Decid. Tr. (0.50' CRABAPPLE)
+54.62, 24.16', Bush
+62.88, 23.81', Sing. Post Sign (ONE WAY)
+98.02, 35.23', Pwp.
+98.14, 37.67', Sing. Post Sign (STOP)
1132+06.80, 21.84', Lt. Pole (0.50' DIAM. ALUM)
+20.39, 23.82', Decid. Tr. (1.50' ELM)
+41.59, 23.92', Decid. Tr. (2.00' ELM)
+51.31, 22.06', Wat. Meter
+52.60, 32.62', Ret. Wall
+61.92, 23.55', Decid. Tr. (1.20' MAPLE)
+63.22, 21.86', Sing. Post Sign (NO PARKING HERE TO CORNER)
+67.94, 33.80', Ret. Wall
+74.24, 32.37', Ret. Wall
+78.71, 23.70', Decid. Tr. (1.00' MAPLE)
1133+06.62, 23.91', Decid. Tr. (2.00' SYCAMORE)
+11.74, 33.87', Ret. Wall
+17.65, 32.84', Ret. Wall
+31.25, 23.77', Decid. Tr. (2.00' SYCAMORE)
+41.91, 21.56', Lt. Pole (0.50' DIAM. ALUM)
+47.79, 22.01', Sing. Post Sign (PEDESTRIAN CROSSING)
+58.66, 32.70', Ret. Wall
+67.75, 32.79', Ret. Wall
+73.92, 22.27', Decid. Tr. (0.50' CRABAPPLE)
1134+04.39, 32.15', Ret. Wall
+15.85, 32.32', Ret. Wall
+25.18, 23.39', Decid. Tr. (2.00' ELM)
+34.92, 32.28', Ret. Wall
+43.88, 44.32', Decid. Tr. (0.60' TWIN BIRCH)
+49.84, 22.88', Decid. Tr. (1.50' ELM)
+55.23, 37.46', Bush
+62.44, 38.13', Bush
+80.27, 21.63', Lt. Pole (0.60' DIAM. ALUM)
+90.33, 23.22', Cb. Inlet
1135+00.71, 31.19', Sun. Mh.
+06.18, 23.17', Tel. Mh.
+23.85, 22.15', Cb. Inlet
+31.86, 34.44', Ret. Wall
+32.71, 21.99', Sing. Post Sign (ONE WAY)
+37.89, 32.74', Ret. Wall
+39.31, 23.40', F. Hyd.
+42.12, 32.64', Ret. Wall
+58.52, 32.93', Ret. Wall
+62.73, 32.81', Ret. Wall
+64.84, 23.94', Decid. Tr. (0.50' BIRCH)
+70.93, 32.77', Ret. Wall
+82.17, 32.49', Ret. Wall
+83.87, 44.43', Bush
+92.70, 32.48', Ret. Wall
+97.25, 32.44', Ret. Wall
+98.41, 24.99', Decid. Tr. (GRASS)

ALL TOPOGRAPHY DESCRIBED FROM LINE "D", EXCEPT AS SHOWN.

TBM #35: Cut "X" in N. Bolt of F. Hyd.
Sta. 1158+20.05"D", 24.30' Lt.
Adjusted El. = 979.2926

Not for Construction

Clark Dietz
ENGINEERS

RECOMMENDED FOR APPROVAL _____ DESIGN ENGINEER DATE

DESIGNED: JAL DRAWN: MP
CHECKED: RBI CHECKED: JAL

INDIANA
DEPARTMENT OF TRANSPORTATION

EXISTING TOPOGRAPHY
US 27 SOUTHBOUND

HORIZONTAL SCALE	BRIDGE FILE
1" = 20'	
VERTICAL SCALE	DESIGNATION
NONE	0100701
SURVEY BOOK	SHEETS
	66 of 278
CONTRACT	PROJECT
R-30397	0100701

12:09:55 PM 8/26/2016 P:\0170190\Plans\Existing\06_EX_US27_SB_105.dgn

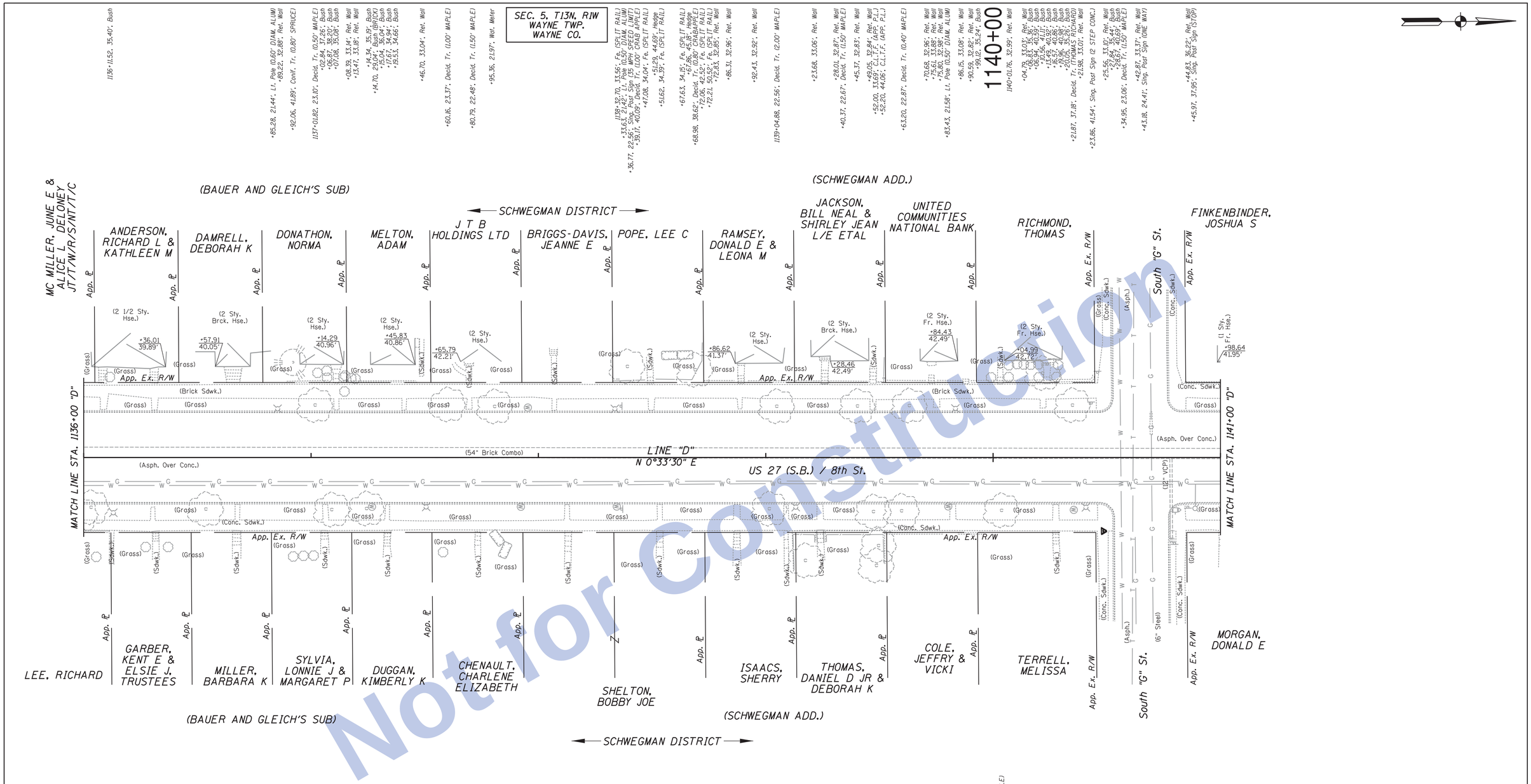

Not for Construction

1136+03.25, 21.89', Decid. Tr. (1.20' MAPLE)
+05.52, 43.72', Bush
+11.25, 32.42', Ref. Wall
+13.02, 24.30', Lt. Pole (0.50 ALUM)
+27.27, 39.39', Bush
+37.12, 39.37', Bush
+53.77, 22.68', Decid. Tr. (1.00' MAPLE)
+92.15, 43.56', Bush
+96.67, 43.26', Bush
1137+01.12, 43.16', Bush
+09.14, 22.90', Decid. Tr. (0.80' MAPLE)
+24.46, 22.43', Decid. Tr. (1.50' MAPLE)
+26.80, 21.68', Wat. Meter
+50.61, 21.74', Lt. Pole (0.50' DIAM. ALUM)
+58.07, 41.65', Bush
+79.84, 32.90', Hedge
+82.74, 46.77', Hedge
+85.71, 40.32', Hedge
+92.29, 21.69', Wat. Meter
1138+74.49, 21.59', Wat. Meter
+37.08, 22.71', Sing. Post Sign (35 MPH)
1139+01.62, 22.51', Decid. Tr. (2.00' MAPLE)
+12.07, 34.09', Wood Fe.
+12.39, 33.94', Wood Fe.
+12.59, 49.76', Wood Fe.
+13.17, 21.83', Lt. Pole (0.60' DIAM. ALUM)
+17.49, 45.26', Decid. Tr. (1.20' PINE)
+21.23, 34.01', Wood Fe.
+21.57, 37.61', Wood Fe.
+21.68, 34.43', Wood Fe.
+26.78, 34.35', Wood Fe.
+26.83, 37.25', Wood Fe.
+26.93, 34.04', Wood Fe.
+47.41, 23.78', Decid. Tr. (1.80' MAPLE)
+49.25, 47.49', Decid. Tr. (0.30' HEMLOCK)
+49.62, 34.75', Decid. Tr. (0.10' CHERRY)
+51.77, 34.20', Wood Fe.
+51.64, 34.00', Wood Fe.
+52.14, 46.70', Ref. Wall
+52.68, 33.29', Ref. Wall
+59.79, 23.44', Decid. Tr. (4.00' MAPLE)
+78.23, 33.13', Ref. Wall
+80.29, 21.53', Wat. Meter
+84.67, 33.18', Ref. Wall
+96.14, 33.13', Ref. Wall
1140+03.77, 23.23', Decid. Tr. (0.40' CRABAPPLE)
+35.49, 23.05', Wat. Meter
+40.81, 21.92', Lt. Pole (0.60' DIAM. ALUM)
+78.58, 36.49', Cb. Inlet
+79.78, 38.22', Sing. Post Sign (STOP)
+80.10, 23.09', Combo. Pwp.
+85.66, 22.29', Sing. Post Sign (ONE WAY)
+88.83, 22.38', F. Hyd.

ALL TOPOGRAPHY DESCRIBED FROM LINE "D", EXCEPT AS SHOWN.

Clark Dietz
ENGINEERS

RECOMMENDED FOR APPROVAL _____ DESIGN ENGINEER DATE

DESIGNED: JAL DRAWN: MP
CHECKED: RBI CHECKED: JAL

INDIANA
DEPARTMENT OF TRANSPORTATION

EXISTING TOPOGRAPHY
US 27 SOUTHBOUND

HORIZONTAL SCALE	BRIDGE FILE
1" = 20'	
VERTICAL SCALE	DESIGNATION
NONE	0100701
SURVEY BOOK	SHEETS
	67 of 278
CONTRACT	PROJECT
R-30397	0100701

12:09:57 PM 8/26/2016 P:\0170190\Plans\Existing\07_EX_US27_SB_106.dgn

SEC. 5, T13N, R1W
WAYNE TWP.
WAYNE CO.

1145+00

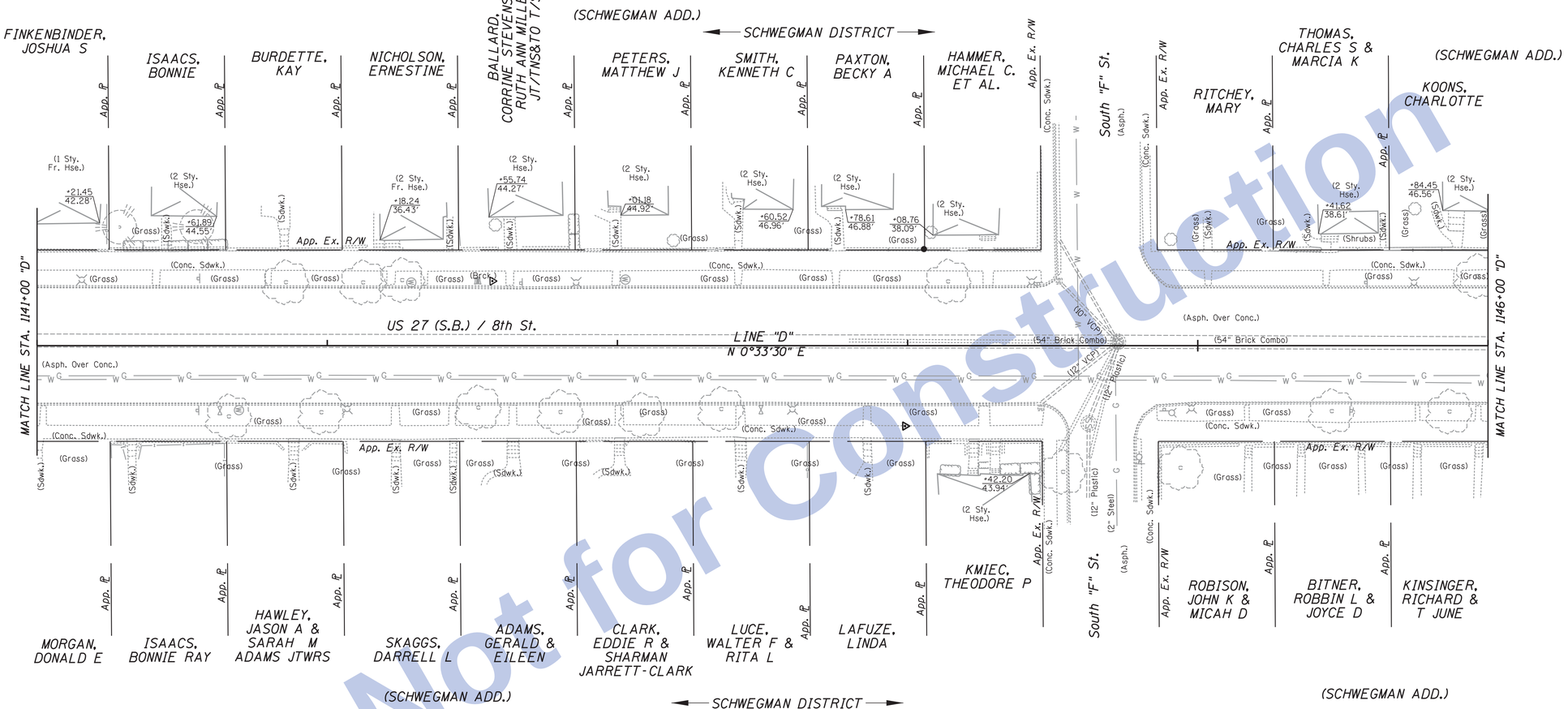

Not for Construction

ALL TOPOGRAPHY DESCRIBED FROM LINE "D", EXCEPT AS SHOWN.

TBM #34: Cut "X" in W Bolt F. Hyd.
Sta. 1149+58.60"D", 24.19' Lt.
Adjusted El. = 977.7936

Clark Dietz ENGINEERS

RECOMMENDED FOR APPROVAL _____ DESIGN ENGINEER DATE

DESIGNED: JAL | DRAWN: MP
CHECKED: RBI | CHECKED: JAL

INDIANA
DEPARTMENT OF TRANSPORTATION

EXISTING TOPOGRAPHY
US 27 SOUTHBOUND

HORIZONTAL SCALE	BRIDGE FILE
1" = 20'	
VERTICAL SCALE	DESIGNATION
NONE	0100701
SURVEY BOOK	SHEETS
	68 of 278
CONTRACT	PROJECT
R-30397	0100701

12:09:59 PM 8/26/2016 P:\0170190\Plans\Existing\08_EX_US27_SB_107.dgn

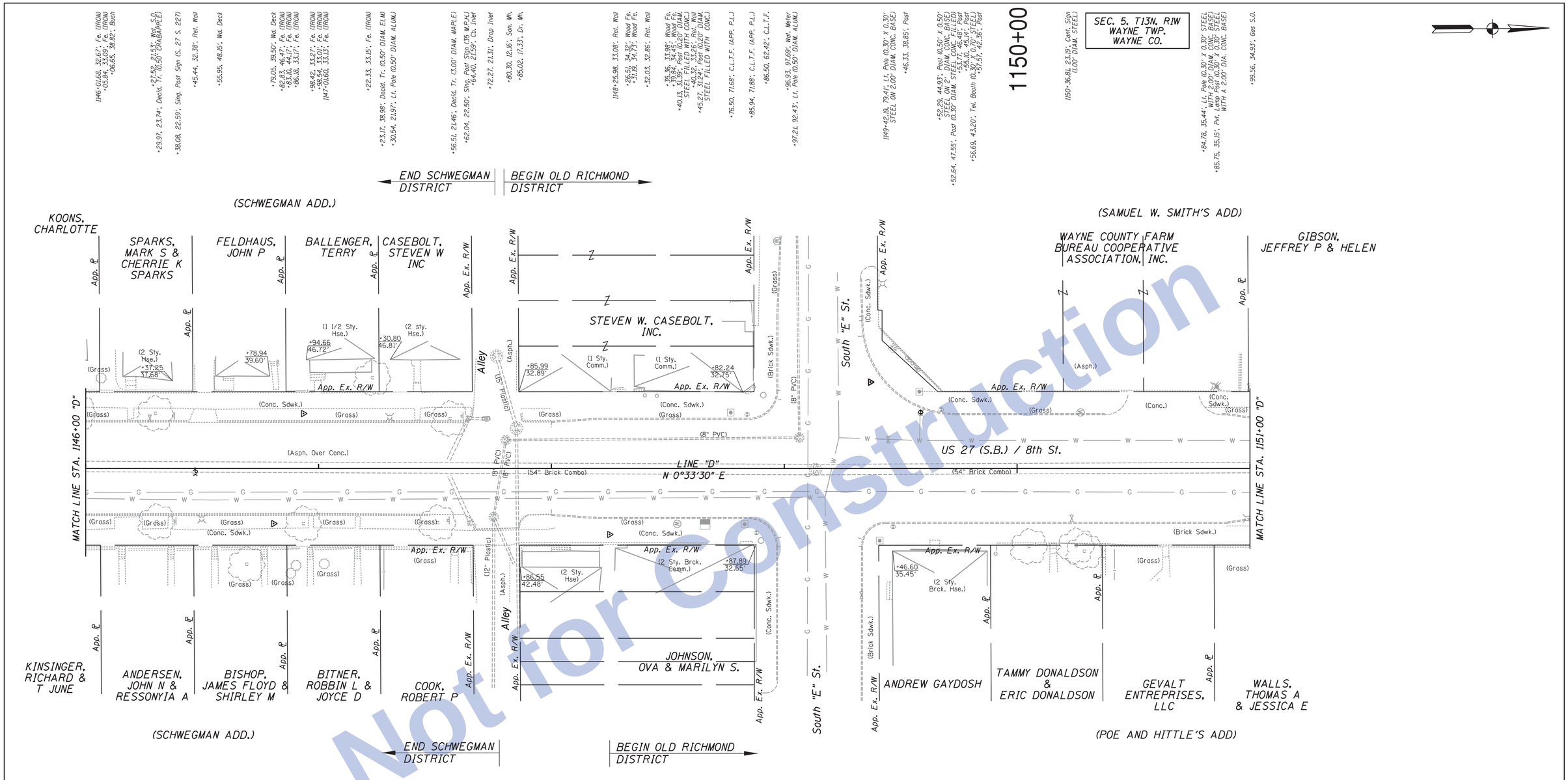

Not for Construction

ALL TOPOGRAPHY DESCRIBED FROM LINE "D", EXCEPT AS SHOWN.

TBM #34: Cut "X" in W Bolt F. Hyd.
Sta. 1149+58.60"D", 24.19' Lt.
Adjusted El. = 977.7936

Clark Dietz ENGINEERS

RECOMMENDED FOR APPROVAL _____ DESIGN ENGINEER DATE

DESIGNED: JAL | DRAWN: MP
CHECKED: RBI | CHECKED: JAL

INDIANA
DEPARTMENT OF TRANSPORTATION

EXISTING TOPOGRAPHY
US 27 SOUTHBOUND

HORIZONTAL SCALE	BRIDGE FILE
1" = 20'	
VERTICAL SCALE	DESIGNATION
NONE	0100701
SURVEY BOOK	SHEETS
	69 of 278
CONTRACT	PROJECT
R-30397	0100701

12:10:01 PM 8/26/2016 P:\0170190\Plans\Existing\09_EX_US27_SB_108.dgn

SEC. 5, T13N, R1W
WAYNE TWP.
WAYNE CO.

1151+04.91, 33.34', Wood Fe. (APP. PL.)
+05.26, 50.13', Wood Fe. (APP. PL.)
+05.36, 49.61', Wood Fe. (APP. PL.)
+05.68, 34.05', Fe. (IRON) (0.25' STEEL)
+29.76, 33.67', Fe. (IRON)
+30.19, 33.50', Fe. (IRON)
+39.36, 33.55', Fe. (IRON)
+39.89, 33.83', Fe. (IRON)
+46.60, 23.71', Decid. Tr. (2.00' MAPLE)
+50.14, 33.91', Bush
+53.82, 34.17', Fe. (IRON)
+54.16, 50.69', F.F.L.F. (APP. PL.)
+54.25, 33.84', Fe. (IRON)
+54.81, 33.10', Ret. Wall
+62.73, 36.95', C.L.T.F.
+68.00, 32.97', Ret. Wall
+72.01, 33.00', Ret. Wall
+83.99, 21.76', Lt. Pole (0.50' DIA. ALUM.)
+95.50, 33.01', Ret. Wall
+95.80, 36.17', Hedge
+96.48, 33.94', Ret. Wall
+96.73, 33.47', Ret. Wall
1152+06.15, 24.89', Decid. Tr. (2.00' ELM)
+10.42, 36.65', Bush
+14.96, 35.59', Hedge
+19.22, 33.77', Ret. Wall
+19.59, 33.41', Ret. Wall
+31.53, 33.48', Ret. Wall
+35.14, 33.46', Ret. Wall
+39.76, 25.11', Decid. Tr. (2.00' HACKBERRY)
+57.30, 34.35', Fe. (IRON)
+57.47, 40.28', Fe. (IRON)
+71.27, 33.62', Ret. Wall
+74.41, 33.58', Ret. Wall
1153+08.30, 37.08', Flag Pole (0.20' DIA. STEEL)
+14.42, 40.03', Wd. Deck
+17.40, 33.65', Ret. Wall
+21.75, 33.71', Ret. Wall
+23.35, 23.05', Wd. Meter
+30.93, 40.37', Wd. Deck
+38.94, 33.83', Ret. Wall
+39.13, 33.80', Ret. Wall
+39.22, 33.82', Ret. Wall
+39.58, 34.44', C.L.T.F. (APP. PL)
+39.49, 42.21', C.L.T.F. (APP. PL)
+39.64, 34.99', Ret. Wall
+42.16, 21.80', Lt. Pole (0.50' DIA. ALUM.)
+79.23, 22.99', Decid. Tr. (1.00' CHABAPPLE)
+81.44, 40.61', Bush
+81.62, 38.64', Bush
+87.23, 34.47', Fe. (IRON)
+87.39, 33.72', Ret. Wall
+88.31, 43.79', Bush
+90.86, 33.69', Ret. Wall
+91.26, 33.69', Ret. Wall
+91.44, 34.28', Fe. (IRON)
+91.89, 36.11', Bush
+92.29, 36.52', Bush
+92.48, 40.46', Bush
+97.35, 40.98', Bush
1154+02.71, 45.89', Bush
+18.48, 40.61', Conif. Tr. (1.20' SPRUCE)
+19.03, 39.81', Conif. Tr. (0.50' PINE)
+19.77, 33.83', Ret. Wall
+29.97, 45.75', C.L.T.F. (APP. PL)
+29.99, 33.69', C.L.T.F. (APP. PL)
+30.56, 33.57', Ret. Wall
+40.63, 22.93', Decid. Tr. (2.00' MAPLE)
+42.24, 33.56', Ret. Wall
+49.43, 33.54', Ret. Wall
+58.70, 24.58', Decid. Tr. (1.50' MAPLE)
+92.39, 22.15', Lt. Pole (0.50' DIA. ALUM.)
+99.13, 33.35', Ret. Wall
1155+00
1155+07.45, 33.75', Ret. Wall
+23.05, 22.83', Decid. Tr. (0.50' MAPLE)
+28.49, 33.11', Ret. Wall
+35.93, 33.14', Ret. Wall
+45.47, 22.86', Wd. Meter
+51.90, 33.24', Ret. Wall
+55.33, 33.22', Ret. Wall
+63.23, 32.98', Ret. Wall
+70.89, 33.26', Ret. Wall
+70.82, 34.69', C.L.T.F. (APP. PL)
+71.33, 45.07', C.L.T.F. (APP. PL)
+78.51, 22.96', Decid. Tr. (1.00' CHABAPPLE)
+85.39, 32.96', Ret. Wall
+90.49, 32.93', Ret. Wall

OLD RICHMOND DISTRICT

HARVEST LAND CO-OP, INC
GIBSON, JEFFREY P & HELEN
MORGAN, PHILIP & ROBIN F
RUSSELL, WILLIAM E & REBECCA S
PECORARO, JOSEPH J
MOREFIELD, CHARLES T & TAMMY M
CORNTHWAITE, PAUL E
(SAMUEL W. SMITH'S ADD)
EMBRY, JAMES W
DURBIN PROPERTY MANAGEMENT LLC
K2 PROPERTIES, LLC
BALLENGER, DONALD R

App. PL
(1 1/2 Sty. Fr. Hse.) +31.17 41.52'
(2 Sty. Hse.) +63.27 37.22'
(2 Sty. Fr. Hse.)
(2 Sty. Fr. Hse.) +55.99 46.88'
(2 Sty. Fr. Hse.) +91.18 40.30'
(2 Sty. Brck. Hse.) +31.13 44.16'
(Grass)
(Ldscp.)
(Lawn)
App. Ex. R/W
(Conc. Sdwk.)
(Asph. Over Conc.)
(54" Brick Combo)
LINE "D"
N 0°33'30" E
US 27 (S.B.) / 8th St.
(Brick Sdwk.)
MATCH LINE STA. 1151+00 "D"
MATCH LINE STA. 1156+00 "D"

(2 Sty. Brck. Hse.) +13.75 39.51'
(1 Sty. Fr. Hse.) +78.03 40.47'
(2 Sty. Fr. Hse.) +23.51 46.57'
(2 Sty. Fr. Hse.) +78.52 46.27'
(2 Sty. Fr. Hse.) +03.95 40.77'
(2 Sty. Fr. Hse.) +75.76 44.36'
(2 Sty. Fr. Hse.) +27.58 42.99'
(2 Sty. Fr. Hse.) +69.88 37.49'
(2 Sty. Fr. Hse.) +90.78 40.28'
(2 Sty. Fr. Hse.) +39.60 37.52'
(2 Sty. Brck. Hse.) +86.18 41.31'
(2 Sty. Fr. Hse.)

WALLS, THOMAS A & JESSICA E
KRONE, RALPH A JR & REBECCA ANN CHANCE JTLY TO SUR THEM N T/C
ROBISON, JAMES & LUCY M
OWENS, THOMAS JEFFERSON
GARENTINO, H ANNE
LICHTENFELS, ROBERT M & DEANA R & ROBERT M LICHTEFELS JTWRS
HAMM, ROBERT
SIZEMORE, JEFFREY E
COLE, WILLIAM A & CAROLYN
NORTHRUP PROPERTIES LLC
BAILEY, EDITH L

(POE AND HITTLE'S ADD)
(CIN. AND FT. WAYNE R.R. CO.'S ADD.)
(SAMUEL W. SMITH'S ADD)
OLD RICHMOND DISTRICT
(CIN. AND FT. WAYNE R.R. CO.'S ADD.)

1151+09.09, 33.30', Ret. Wall
+13.18, 33.08', Ret. Wall
+18.91, 36.44', Bush
+22.63, 35.84', Bush
+28.01, 35.82', Bush
+32.66, 38.10', Bush
+35.29, 33.40', Ret. Wall
+36.88, 33.29', Ret. Wall
+50.07, 20.81', Cb. Inlet
+57.45, 33.43', Ret. Wall
+61.15, 33.49', Ret. Wall
+85.50, 33.44', Ret. Wall
+95.37, 33.15', Ret. Wall
1152+02.58, 33.11', Ret. Wall
+06.85, 42.77', Bush
+07.37, 33.09', Ret. Wall
+22.97, 43.79', Bush
+35.61, 36.43', Decid. Tr. (0.50' QUAD ASH)
+36.42, 41.70', Decid. Tr. (0.50' ASH)
+37.46, 50.59', Decid. Tr. (1.00' ELM)
+55.76, 32.94', Ret. Wall
+59.46, 32.92', Ret. Wall
+72.18, 21.77', Lt. Pole (0.50' DIA. ALUM.)
+82.43, 34.21', C.L.T.F. (APP. PL)
+82.51, 50.85', C.L.T.F. (APP. PL)
1153+05.76, 33.78', C.L.T.F.
+05.88, 32.82', Ret. Wall
+09.81, 32.73', Ret. Wall
+10.01, 33.67', C.L.T.F.
+31.28, 33.71', F.F.T.F. (APP. PL)
+32.05, 55.22', F.F.T.F (APP. PL)
+56.60, 32.81', Ret. Wall
+60.41, 32.86', Ret. Wall
+80.37, 33.56', C.L.T.F. (APP. PL)
+80.50, 49.73', C.L.T.F. (APP. PL)
+83.37, 23.41', Sing. Post Sign (RESERVED PARKING)
+87.61, 32.83', Ret. Wall
+90.70, 32.82', Ret. Wall
1154+16.34, 21.62', Lt. Pole (0.50' DIA. ALUM.)
+19.34, 32.88', Ret. Wall
+70.50, 23.24', Decid. Tr. (1.00' MAPLE)
+79.30, 39.63', Fe. (IRON)
+79.37, 34.08', Fe. (IRON)
+87.53, 23.37', Decid. Tr. (1.00' MAPLE)
+99.28, 22.25', Wd. Meter
1155+00.76, 22.35', Wd. Meter
+12.66, 34.00', Fe. (IRON)
+17.05, 33.88', Fe. (IRON)
+23.25, 36.08', Ret. Wall (GRASS)
+26.20, 33.63', Fe. (IRON)
+27.84, 33.96', Decid. Tr. (1.00' MAPLE CLUMP)
+28.62, 33.93', Decid. Tr. (0.50' DIA. STEEL FILLED WITH CONC.)
+39.05, 32.66', Ret. Wall
+42.06, 32.66', Ret. Wall
+45.94, 32.91', Ret. Wall
+48.15, 34.82', Bush
+52.87, 33.61', Bush
+56.05, 33.91', Bush
+63.31, 34.16', Bush
+63.87, 33.71', Bush
+66.40, 32.78', Ret. Wall
+69.58, 32.77', Ret. Wall
+75.40, 40.67' Post (APP. PL. 0.10' STEEL FENCE POST)
+76.63, 32.87', Ret. Wall
+76.88, 63.43', Ret. Wall
(APP. PL. 0.10' STEEL FENCE POST)
+81.25, 21.91', Lt. Pole (0.50' DIA. ALUM.)

ALL TOPOGRAPHY DESCRIBED FROM LINE "D", EXCEPT AS SHOWN.

Not for Construction

12:10:02 PM 8/26/2016 P:\0170190\Plans\Existing\10_EX_US27_SB_109.dgn

Clark Dietz
ENGINEERS

RECOMMENDED FOR APPROVAL _____ DESIGN ENGINEER DATE

DESIGNED: JAL DRAWN: MP
CHECKED: RBI CHECKED: JAL

INDIANA
DEPARTMENT OF TRANSPORTATION

EXISTING TOPOGRAPHY
US 27 SOUTHBOUND

HORIZONTAL SCALE	BRIDGE FILE
1" = 20'	
VERTICAL SCALE	DESIGNATION
NONE	0100701
SURVEY BOOK	SHEETS
	70 of 278
CONTRACT	PROJECT
R-30397	0100701

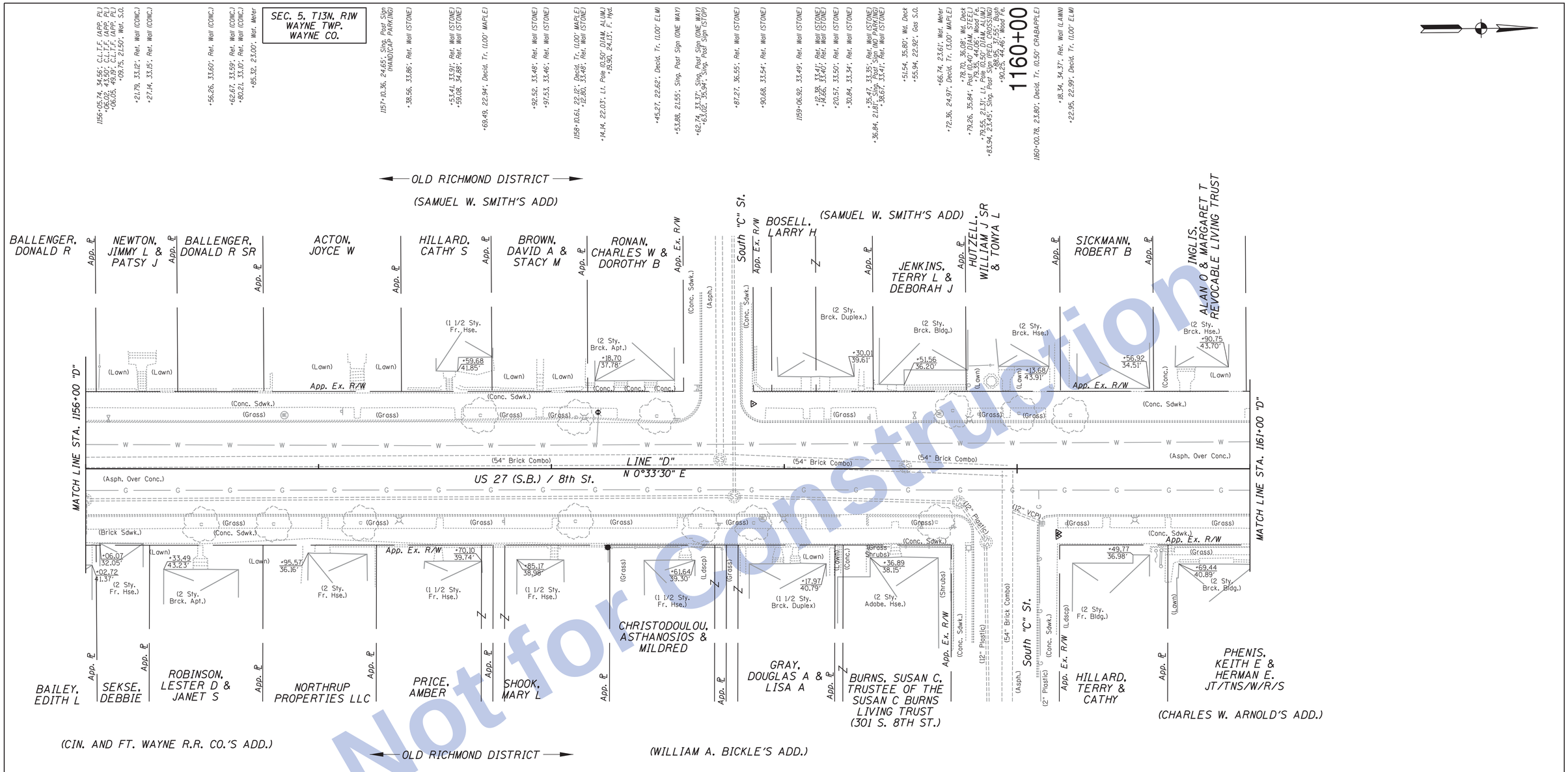

Not for Construction

ALL TOPOGRAPHY DESCRIBED FROM LINE "D", EXCEPT AS SHOWN.

TBM #35: Cut "X" in N. Bolt of F. Hyd.
Sta. 1158+20.05"D", 24.30' Lt.
Adjusted El. = 979.2926

Clark Dietz
ENGINEERS

RECOMMENDED FOR APPROVAL _____ DESIGN ENGINEER DATE

DESIGNED: JAL DRAWN: MP
CHECKED: RBI CHECKED: JAL

INDIANA
DEPARTMENT OF TRANSPORTATION

EXISTING TOPOGRAPHY
US 27 SOUTHBOUND

HORIZONTAL SCALE	BRIDGE FILE
1" = 20'	
VERTICAL SCALE	DESIGNATION
NONE	0100701
SURVEY BOOK	SHEETS
	71 of 278
CONTRACT	PROJECT
R-30397	0100701

12:10:04 PM 8/26/2016 P:\0170190\Plans\Existing\11_EX_US27_SB_110.dgn

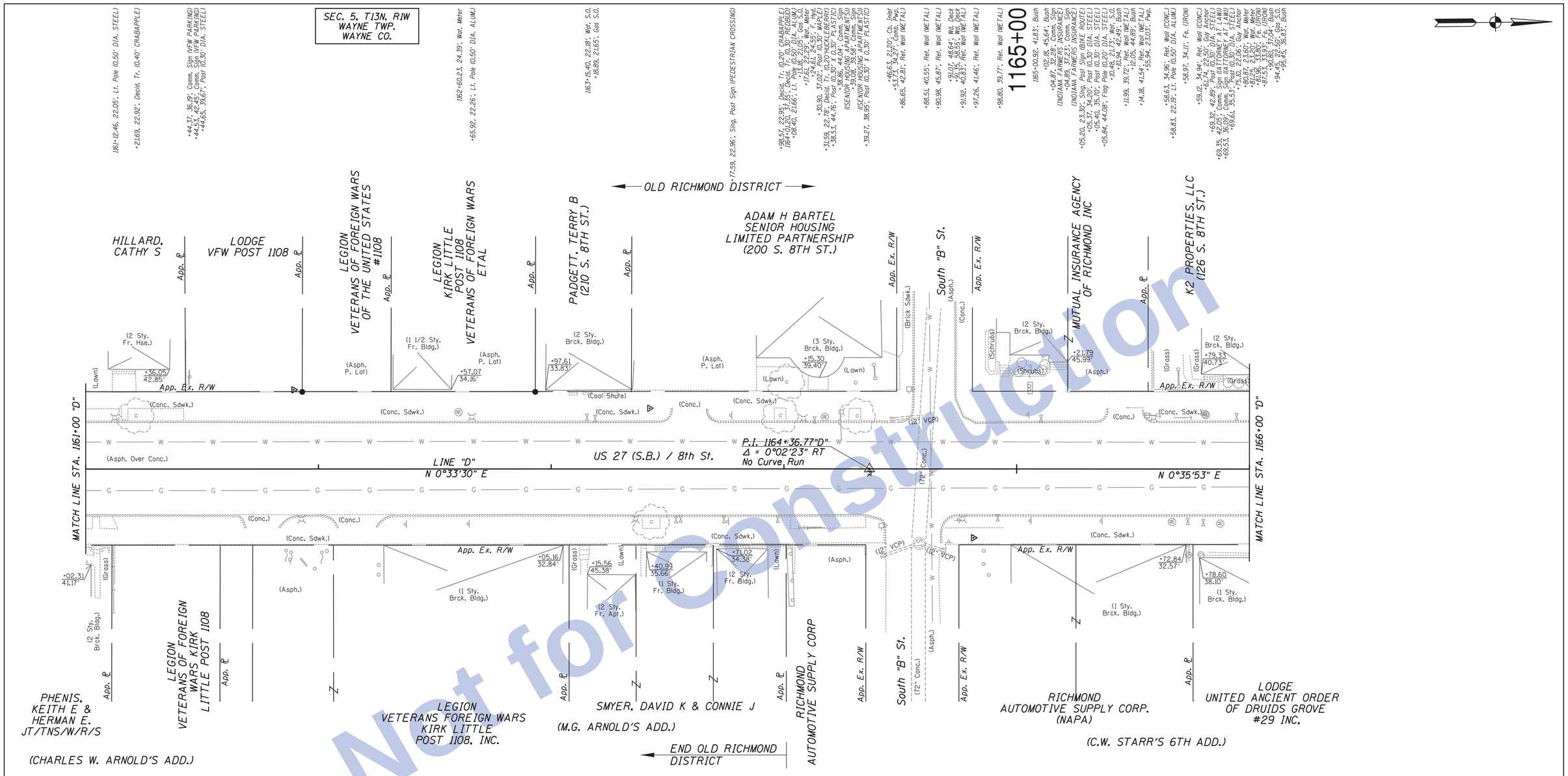

ALL TOPOGRAPHY DESCRIBED FROM LINE "D", EXCEPT AS SHOWN.

Clark Dietz ENGINEERS

RECOMMENDED FOR APPROVAL _____ DESIGN ENGINEER DATE

DESIGNED: JAL | DRAWN: MP
CHECKED: RBI | CHECKED: JAL

INDIANA DEPARTMENT OF TRANSPORTATION

EXISTING TOPOGRAPHY US 27 SOUTHBOUND

HORIZONTAL SCALE	BRIDGE FILE
1" = 20'	
VERTICAL SCALE	DESIGNATION
NONE	0100701
SURVEY BOOK	SHEETS
	72 of 278
CONTRACT	PROJECT
R-30397	0100701

12:10:06 PM 8/26/2016 P:\0170190\Plans\Existing\12_EX_US27_SB_111.dgn

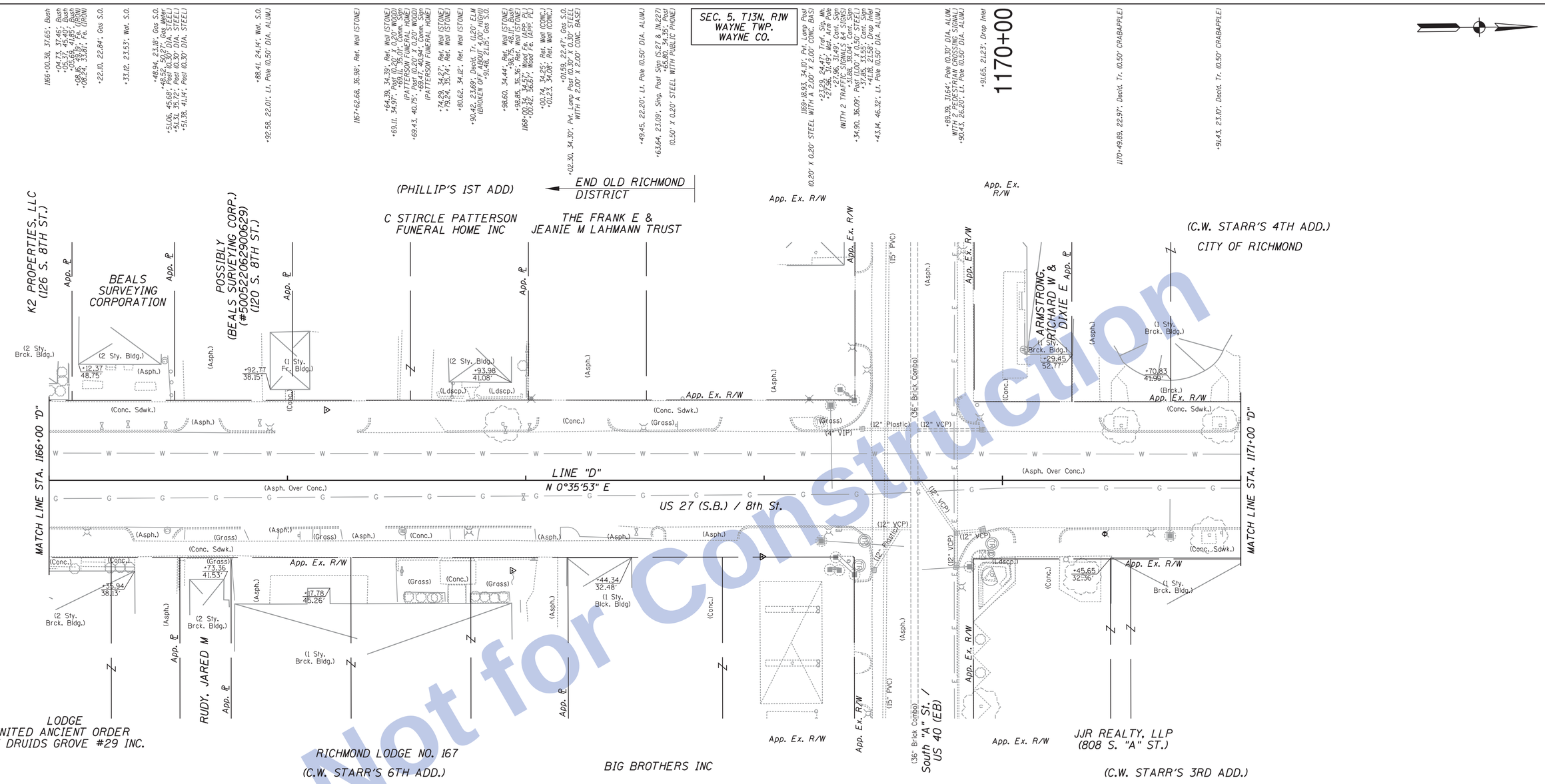

Not for Construction

1166+00.38, 37.65'; Bush
+04.13, 37.46'; Bush
+05.23, 37.46'; Bush
+05.69, 41.85'; Bush
+08.16, 49.19'; Fe. (IRON)
+08.24, 53.81'; Fe. (IRON)
+22.10, 22.84'; Gas S.O.
+33.12, 23.53'; Wat. S.O.
+48.94, 23.18'; Gas S.O.
+48.52, 50.27'; Gas Meter
+51.06, 45.68'; Post (0.30' DIA. STEEL)
+51.11, 37.72'; Post (0.30' DIA. STEEL)
+51.38, 41.14'; Post (0.30' DIA. STEEL)
+88.41, 24.14'; Wat. S.O.
+92.58, 22.01'; Lt. Pole (0.50' DIA. ALUM.)
1167+62.68, 36.98'; Ret. Wall (STONE)
+64.39, 34.39'; Ret. Wall (STONE)
+69.11, 34.97'; Post (0.25' DIA. CAP WOOD)
+69.13, 40.85'; Post (0.25' DIA. CAP WOOD)
(PATTERSON FUNERAL HOME)
+69.43, 40.75'; Post (0.20' X 0.20' WOOD)
+69.41, 40.94'; Comm. Sign
(PATTERSON FUNERAL HOME)
+74.29, 34.27'; Ret. Wall (STONE)
+79.24, 35.74'; Ret. Wall (STONE)
+80.62, 34.12'; Ret. Wall (STONE)
+90.42, 23.69'; Decid. Tr. (1.20' ELM (BROKEN OFF ABOUT 4.00' HIGH))
+91.48, 21.15'; Gas S.O.
+98.60, 34.44'; Ret. Wall (STONE)
+98.61, 36.98'; Fe. (IRON)
+98.85, 36.36'; Ret. Wall (STONE)
1168+00.34, 34.57'; Wood Fe. (APP. PL)
+00.42, 36.51'; Wood Fe. (APP. PL)
+00.74, 34.28'; Ret. Wall (CONC.)
+01.23, 34.08'; Ret. Wall (CONC.)
+02.30, 34.30'; Pvt. Lamp Post (0.30' X 0.30' STEEL WITH A 2.00' X 2.00' CONC. BASE)
+49.45, 22.20'; Lt. Pole (0.50' DIA. ALUM.)
+63.64, 23.09'; Sing. Post Sign (S.27 & JN.227)
+65.80, 34.35'; Post (0.50' X 0.20' STEEL WITH PUBLIC PHONE)
1169+18.93, 34.10'; Pvt. Lamp Post (0.20' X 0.20' STEEL WITH A 2.00' X 2.00' CONC. BASE)
+23.58, 24.49'; Traf. Sig. Am.
+27.29, 31.47'; Wood Fe. (APP. PL)
+27.96, 31.49'; Cont. Sign
(WITH 2 TRAFFIC SIGNALS & 4 SIGNS)
+31.86, 33.24'; Wood Fe. (APP. PL)
+34.90, 36.09'; Post (0.30' DIA. STEEL)
+37.85, 33.55'; Cont. Sign
+41.18, 21.58'; Drop Inlet
+43.14, 46.32'; Lt. Pole (0.50' DIA. ALUM.)
+89.39, 31.64'; Pole (0.30' DIA. ALUM. WITH 2 PEDESTRIAN CROSSING SIGNAL)
+90.43, 26.20'; Lt. Pole (0.50' DIA. ALUM.)
+91.65, 21.23'; Drop Inlet
1170+49.89, 22.97'; Decid. Tr. (0.50' CRABAPPLE)
+91.43, 23.10'; Decid. Tr. (0.50' CRABAPPLE)
1166+03.61, 37.14'; Hedge
+10.72, 37.14'; Bush
+11.23, 36.46'; Hedge
+15.89, 21.67'; Lt. Pole (0.50' DIA. ALUM.)
+25.65, 36.74'; Bush
+29.90, 36.56'; Bush
+33.69, 36.50'; Bush
+49.63, 20.99'; Gas Meter
+54.32, 32.40'; Ret. Wall (CONC.)
+54.79, 32.45'; Ret. Wall (CONC.)
+57.86, 32.11'; Ret. Wall (CONC.)
+75.68, 32.11'; Ret. Wall (CONC.)
+93.00, 40.01'; Crpy. Cor.
1167+05.29, 23.21'; Sing. Post Sign (RESERVED HANDICAP PARKING)
+33.83, 40.11'; Crpy. Cor.
+45.96, 32.76'; Ret. Wall (CONC.)
+47.99, 38.13'; Post
+50.07, 38.13'; Post (WITH SIGN)
+48.33, 21.32'; Wat. Meter
+50.17, 48.80'; Bush
+50.84, 49.19'; Bush
+52.61, 49.39'; Bush
+62.49, 49.13'; Bush
+63.59, 32.68'; Ret. Wall (CONC.)
+76.15, 21.37'; Lt. Pole (0.50' DIA. ALUM.)
+76.80, 21.37'; Lt. Pole (0.50' DIA. ALUM.)
+78.93, 44.62'; Drop Inlet
+79.92, 32.69'; Ret. Wall (CONC.)
+82.69, 48.91'; Bush
+86.94, 49.48'; Bush
+90.32, 49.79'; Bush
+92.50, 32.70'; Wall
(2.01' X 1.00' CONC. (LODGE DEDICATION)
+94.45, 38.79'; Flag Pole (0.50' DIA. ALUM.)
+97.94, 50.33'; Wood Fe. (APP. PL)
+98.84, 50.33'; Wood Fe. (APP. PL)
+99.09, 6.93'; Gas S.O.
1168+03.40, 33.57'; Sing. Post Sign (ONE WAY)
+03.76, 32.71'; Ret. Wall (CONC.)
+46.40, 21.71'; Wat. S.O.
1169+24.01, 25.43'; Mot. Arm Pole
+24.01, 25.43'; Cont. Sign
(1 TRAFFIC SIGNAL & 1 SIGN (S. IN. 27 S. 227)
+26.61, 21.32'; Lt. Pole (0.50' DIA. ALUM.)
+27.60, 37.49'; Cont. Sign
+28.68, 3.62'; Cont. Sign
(WITH 2 TRAFFIC SIGNALS & 4 SIGNS)
+29.52, 37.00'; Post (0.30' DIA. STEEL)
+30.03, 32.30'; Cont. Sign
+31.03, 37.49'; Cont. Sign (SUNOCO)
+31.51, 37.45'; Cont. Sign
+35.50, 33.89'; Post (1.00' DIA. STEEL)
+35.50, 33.89'; Post (SUNOCO)
+40.05, 35.80'; Cont. Sign
+46.06, 37.74'; Drop Inlet
+58.82, 21.85'; Cont. Sign
(1 TRAFFIC SIGNAL & 1 SIGNS S. IN. 27 S. 227)
+65.37, 37.56'; Cont. Sign
(1 TRAFFIC SIGNAL & 1 SIGN (S. 8TH ST.))
+80.66, 36.49'; Drop Inlet
+82.84, 44.68'; Lt. Pole (0.50' DIA. ALUM.)
+82.84, 44.68'; Lt. Pole (0.50' DIA. ALUM.)
+86.20, 36.27'; Cont. Sign (1.00' DIA. STEEL)
+86.20, 36.27'; Cont. Sign
(1 TRAFFIC SIGNAL & 1 SIGN (S. 8TH ST.))
+91.08, 38.51'; Hedge
+91.14, 53.45'; Hedge
+91.69, 49.45'; Hedge
(RIDGEFORD KASSES & NORTH)
+91.88, 21.07'; Drop Inlet
+92.21, 30.98'; Hedge
+91.73, 31.25'; Contr. Cab. (3.00' X 2.00' CONC. BASE)
+92.71, 30.98'; Hedge
(0.30' DIA. STEEL WITH ELECTRIC METER)
+95.59, 35.14'; Hedge
+95.73, 38.70'; Post (1.00' X 1.00' STEEL)
+96.62, 39.01'; Traf. Sig. Mn.
+98.17, 42.72'; Comm. Sign
(RIDGEFORD KASSES & NORTH)
+98.98, 35.25'; Comm. Sign
(RIDGEFORD KASSES & NORTH)
1170+01.36, 35.14'; Hedge
+01.23, 43.20'; Hedge
+25.45, 34.54'; Hedge
+26.66, 33.18'; F. Hyd. (LANDSCAPE AREA)
+33.93, 40.29'; Decid. Tr. (1.00' CRABAPPLE)
+39.69, 34.32'; Hedge
+43.07, 22.33'; F. Hyd.
+62.33, 22.05'; Lt. Pole (0.50' DIA. ALUM.)
+70.38, 23.31'; Cont. Sign (E. US40)
+70.38, 23.31'; Mot. Arm Pole
+70.41, 1.91'; Cont. Sign (E. US40)
+86.87, 22.99'; Decid. Tr. (0.50' CRABAPPLE)
+92.37, 22.05'; Sing. Post Sign (NO PARKING)

ALL TOPOGRAPHY DESCRIBED FROM LINE "D", EXCEPT AS SHOWN.

TBM #36: Cut "X" on E Bolt of F. Hyd.
Sta. 1170+42.91'D', 22.53' Rt.
Adjusted El. = 978.0261

Clark Dietz
ENGINEERS

RECOMMENDED FOR APPROVAL _____ DESIGN ENGINEER DATE

DESIGNED: JAL | DRAWN: MP
CHECKED: RBI | CHECKED: JAL

INDIANA
DEPARTMENT OF TRANSPORTATION

EXISTING TOPOGRAPHY
US 27 SOUTHBOUND

HORIZONTAL SCALE	BRIDGE FILE
1" = 20'	
VERTICAL SCALE	DESIGNATION
NONE	0100701
SURVEY BOOK	SHEETS
	73 of 278
CONTRACT	PROJECT
R-30397	0100701

12:10:08 PM 8/26/2016 P:\0170190\Plans\Existing\13_EX_US27_SB_112.dgn

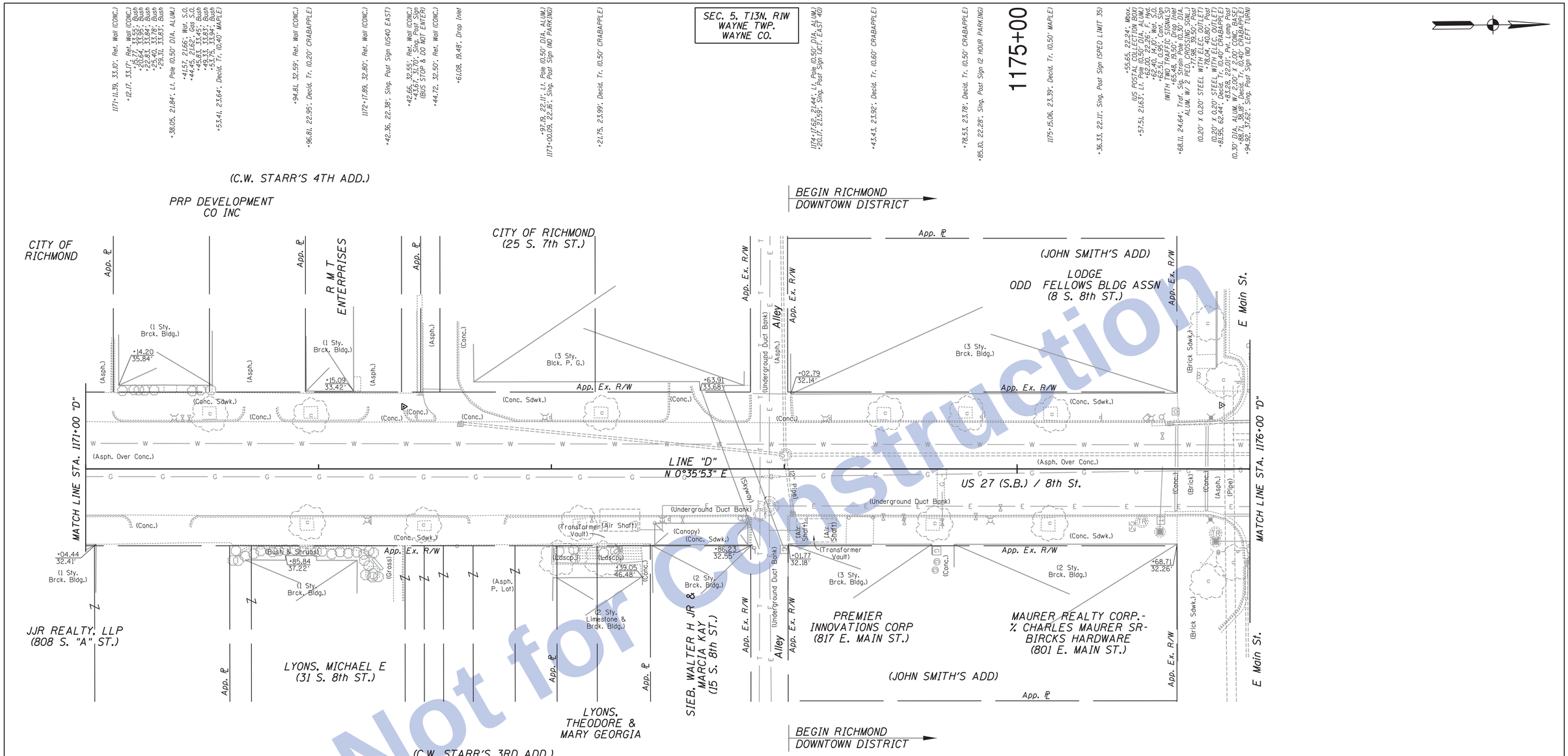

Not for Construction

ALL TOPOGRAPHY DESCRIBED
FROM LINE "D", EXCEPT AS SHOWN.

Clark Dietz
ENGINEERS

RECOMMENDED FOR APPROVAL _____ DESIGN ENGINEER DATE

DESIGNED: JAL DRAWN: MP
CHECKED: RBI CHECKED: JAL

INDIANA
DEPARTMENT OF TRANSPORTATION

EXISTING TOPOGRAPHY
US 27 SOUTHBOUND

HORIZONTAL SCALE	BRIDGE FILE
1" = 20'	
VERTICAL SCALE	DESIGNATION
NONE	0100701
SURVEY BOOK	SHEETS
	74 of 278
CONTRACT	PROJECT
R-30397	0100701

12:10:10 PM 8/26/2016 P:\0170190\Plans\Existing\14_EX_US27_SB_113.dgn

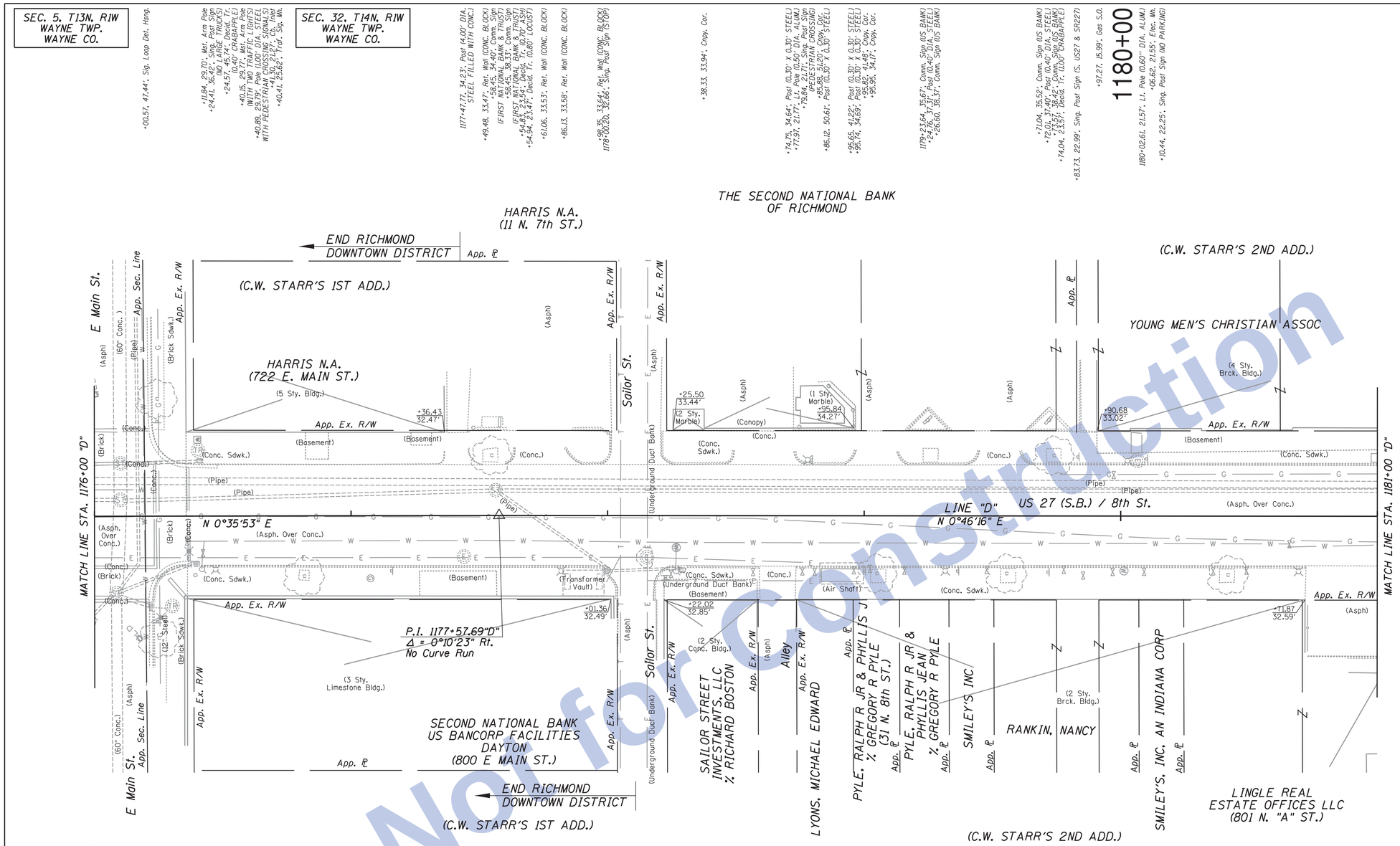

1176+10.16, 31.26'; Cont. Sign (WITH TWO TRAFFIC LIGHTS)

17.66, 47.66'; Sig. Loop Det. Hsng.

22.12, 35.21'; Drop Inlet
24.47, 40.61'; Post (0.30" X 0.30" STEEL)
25.19, 41.53'; Decid. Tr. (0.40" CRABAPPLE)
26.80, 39.56'; Pvt. Lamp Post (0.30" DIA.
42.77, 45.62'; Post (0.30" X 0.30" STEEL)
128.75, 25.07'; Comm. Sign (OVERHEAD SIGN US BANK SIGN WITH TIME & TEMP.)
129.78, 24.11'; Comm. Sign (OVERHEAD SIGN US BANK SIGN WITH TIME & TEMP.)
30.29, 35.04'; Traf. Sig. Mh.
35.44, 32.59'; Comm. Sign (OVERHEAD SIGN US BANK SIGN WITH TIME & TEMP.)
36.12, 31.94'; Wat. S.O.
36.46, 31.80'; Comm. Sign (OVERHEAD SIGN US BANK SIGN WITH TIME & TEMP.)
39.25, 31.14'; Post (0.40" DIA. ALUM. WITH PEDESTRIAN CROSSING SIGNALS)
39.64, 18.69'; Drop Inlet
41.89, 20.71'; Wat. S.O.
42.28, 14.46'; Wat. S.O.
47.18, 20.86'; Lt. Pole (0.50" DIA. ALUM.)
51.94, 23.53'; Decid. Tr. (1.00" CRABAPPLE)
1177+01.51, 24.46'; Gas Meter

16.20, 21.55'; Sing. Post Sign (2 HOUR PARKING)

81.90, 21.65'; Lt. Pole (0.50" DIA. ALUM.)

91.07, 25.96'; Transformer Vault (10'x17')

99.80, 21.36'; Drop Inlet

15.35, 16.28'; Elec. Mh.

1178+22.53, 25.05'; Sing. Post Sign (STOP)
1178+22.53, 23.55'; Sing. Post Sign (DO NOT ENTER)
24.72, 22.73'; Wat. S.O.
26.69, 21.63'; Wat. S.O.
26.69, 21.63'; Wat. Meter
28.88, 12.49'; Wat. S.O.
29.19, 21.29'; Cb. Inlet

56.73, 22.00'; Gas S.O.

75.93, 21.73'; Wat. S.O.
80.72, 21.89'; Gas S.O.

91.25, 25.36'; Transformer Vault (10'x17')

95.97, 21.28'; Gas S.O.
1179+00.50, 21.58'; Sing. Post Sign (PEDESTRIAN CROSSING)
02.05, 20.54'; Wat. S.O.
05.03, 22.44'; Decid. Tr. (0.80" CRABAPPLE)

15.70, 21.37'; Wat. S.O.

31.63, 21.48'; Lt. Pole (0.50" DIA. ALUM.)

36.87, 21.54'; Sing. Post Sign (2 HOUR PARKING)

47.73, 21.09'; Wat. S.O.

55.64, 22.42'; Decid. Tr. (1.00" MAPLE)

72.12, 21.93'; Sing. Post Sign (S.US27 & IN. 227)
77.82, 21.01'; Wat. S.O.

85.37, 23.22'; Gas S.O.

96.86, 21.79'; Wat. S.O.
1180+01.27, 21.38'; Wat. Meter

09.13, 21.74'; Wat. S.O.

36.07, 21.52'; Gas S.O.
41.95, 22.92'; Decid. Tr. (0.40" ELM)

49.03, 21.26'; Wat. S.O.

65.75, 10.93'; Wat. S.O.
69.30, 21.54'; Lt. Pole (0.50" DIA. ALUM.)
72.33, 52.82'; Wood Fe.
73.55, 54.42'; Wood Fe.
75.01, 54.41'; Wood Fe.

+00.57, 47.44'; Sig. Loop Det. Hsng.

+11.84, 32.70'; Mast Arm Pole (WITH TWO TRAFFIC LIGHTS) (NO LARGE TRUCKS)
+24.41, 36.62'; Sing. Post Sign (NO LARGE TRUCKS)
+24.57, 45.74'; Decid. Tr. (0.40" CRABAPPLE)
+40.15, 29.77'; Mast Arm Pole (WITH TWO TRAFFIC LIGHTS WITH PEDESTRIAN CROSSING SIGNALS)
+40.89, 29.79'; Pole (1.00' DIA. STEEL)
+40.41, 25.62'; Trf. Sig. Mh.

1177+47.77, 34.23'; Post (4.00" DIA. STEEL FILLED WITH CONC.)
+49.48, 33.47'; Ret. Wall (CONC. BLOCK)
+58.21, 34.47'; Comm. Sign (FIRST NATIONAL BANK & TRUST)
+58.45, 38.33'; Comm. Sign (FIRST NATIONAL BANK & TRUST)
+54.83, 23.94'; Post (0.80" LOCUST)
+54.94, 23.47'; Decid. Tr. (0.80" LOCUST)
+61.06, 33.53'; Ret. Wall (CONC. BLOCK)
+86.13, 33.58'; Ret. Wall (CONC. BLOCK)

+98.35, 33.64'; Ret. Wall (CONC. BLOCK)
1178+00.20, 32.66'; Sing. Post Sign (STOP)

+38.33, 33.94'; Copy. Cor.

+74.75, 34.64'; Post (0.30" X 0.30" STEEL)
+77.91, 21.17'; Lt. Pole (0.50" DIA. ALUM.)
+79.84, 21.21'; Sing. Post Sign (PEDESTRIAN CROSSING)
+85.88, 51.20'; Copy. Cor.
+86.12, 50.61'; Post (0.30" X 0.30" STEEL)

+95.65, 41.22'; Post (0.30" X 0.30" STEEL)
+95.74, 34.69'; Post (0.40" DIA. STEEL)
+95.92, 34.17'; Copy. Cor.

1179+23.64, 35.67'; Comm. Sign (US BANK)
+24.76, 37.31'; Post (0.40" DIA. STEEL)
+26.60, 38.37'; Comm. Sign (US BANK)

+71.04, 35.52'; Comm. Sign (US BANK)
+72.01, 37.40'; Post (0.40" DIA. STEEL)
+74.17, 38.42'; Post (0.30" X 0.30" STEEL)
+74.04, 23.51'; Decid. Tr. (1.00" CRABAPPLE)

+83.73, 22.99'; Sing. Post Sign (S. US27 & SR227)

+97.21, 15.99'; Gas S.O.

1180+02.61, 21.57'; Lt. Pole (0.60" DIA. ALUM.)
+06.62, 21.55'; Elec. Mh.
+10.44, 22.25'; Sing. Post Sign (NO PARKING)

ALL TOPOGRAPHY DESCRIBED
FROM LINE "D", EXCEPT AS SHOWN.

Not for Construction

Clark Dietz
ENGINEERS

RECOMMENDED FOR APPROVAL _____ DESIGN ENGINEER DATE

DESIGNED: JAL | DRAWN: MP
CHECKED: RBI | CHECKED: JAL

INDIANA
DEPARTMENT OF TRANSPORTATION

EXISTING TOPOGRAPHY
US 27 SOUTHBOUND

HORIZONTAL SCALE	BRIDGE FILE
1" = 20'	
VERTICAL SCALE	DESIGNATION
NONE	0100701
SURVEY BOOK	SHEETS
	75 of 278
CONTRACT	PROJECT
R-30397	0100701

12:10:11 PM 8/26/2016 P:\0170190\Plans\Existing\15_EX_US27_SB_114.dgn

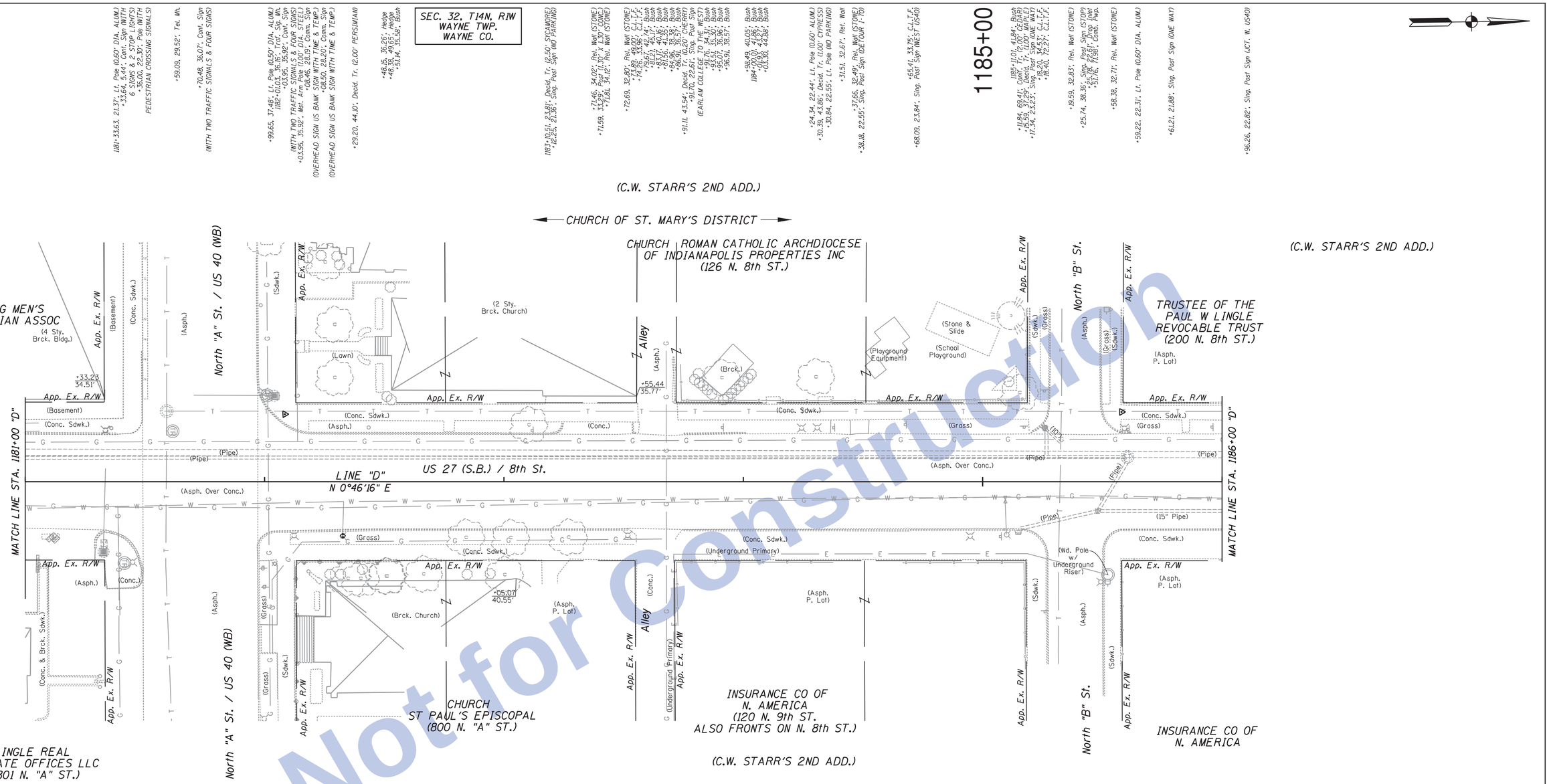

Not for Construction

ALL TOPOGRAPHY DESCRIBED FROM LINE "D", EXCEPT AS SHOWN.

TBM #37: Cut "X" on W Side F. Hyd.
Sta. 1182+32.73"D". 22.58' Rt.
Adjusted El. = 980.3056

Clark Dietz ENGINEERS

RECOMMENDED FOR APPROVAL _____ DESIGN ENGINEER DATE

DESIGNED: JAL | DRAWN: MP
CHECKED: RBI | CHECKED: JAL

INDIANA DEPARTMENT OF TRANSPORTATION

EXISTING TOPOGRAPHY
US 27 SOUTHBOUND

HORIZONTAL SCALE	BRIDGE FILE
1" = 20'	
VERTICAL SCALE	DESIGNATION
NONE	0100701
SURVEY BOOK	SHEETS
	76 of 278
CONTRACT	PROJECT
R-30397	0100701

12:10:13 PM 8/26/2016 P:\0170190\Plans\Existing\16_EX_US27_SB_115.dgn

SEC. 32, T14N, R1W
WAYNE TWP.
WAYNE CO.

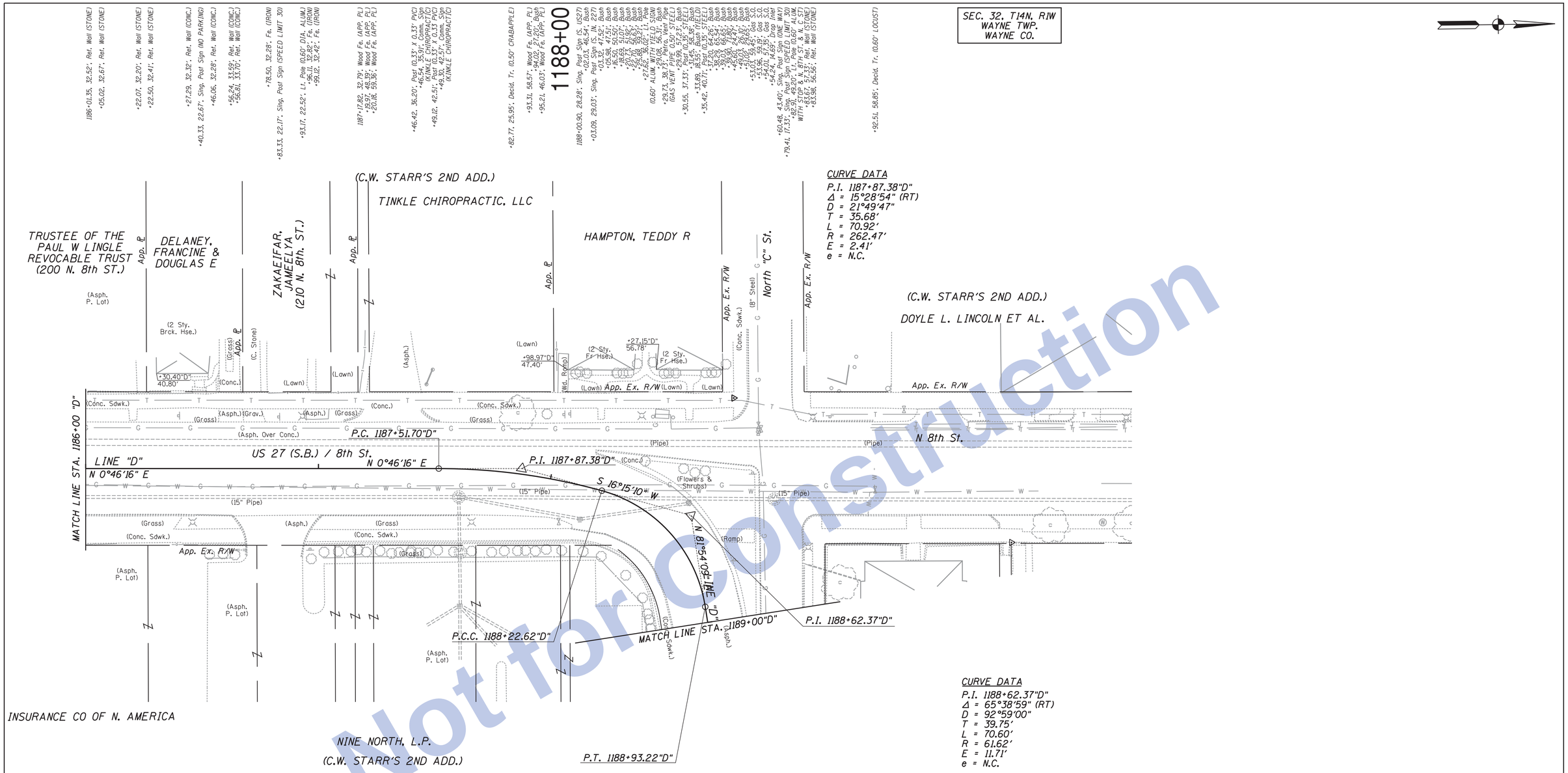

CURVE DATA
P.I. 1187+87.38"D"
Δ = 15°28'54" (RT)
D = 21°49'47"
T = 35.68'
L = 70.92'
R = 262.47'
E = 2.41'
e = N.C.

CURVE DATA
P.I. 1188+62.37"D"
Δ = 65°38'59" (RT)
D = 92°59'00"
T = 39.75'
L = 70.60'
R = 61.62'
E = 11.71'
e = N.C.

1186+13.50, 32.40', C.L.T.F.
+37.08, 32.75', C.L.T.F.
+45.93, 23.02', Lt. Pole (0.50' DIA. ALUM.)
+46.47, 32.78', C.L.T.F.
+51.40, 37.24', Ret. Wall (STONE)
+53.46, 32.90', Ret. Wall (STONE)
+64.36, 22.45', Decid. Tr. (0.60' MAPLE)
+66.14, 32.70', Ret. Wall (STONE)
+70.98, 32.59', Ret. Wall (STONE)
+74.49, 32.72', Ret. Wall (STONE)
+74.49, 32.72', Ret. Wall (STONE)
+76.48, 23.69', Sing. Post Sign (SPEED LIMIT 30)
+88.54, 22.38', Decid. Tr. (1.50' MAPLE)
1187+03.92, 32.88', Ret. Wall (CONC.)
+13.71, 53.46', Conif. Tr. (1.50' SPRUCE)
+13.91, 23.88', Decid. Tr. (1.20' MAPLE)
+29.89, 22.00', Wat. S.O.
+40.11, 22.77', Decid. Tr. (1.000' TRIPLE MAPLE)
+61.68, 23.04', Decid. Tr. (1.00' MAPLE)
+64.90, 53.30', Post (0.33' X 0.33' WOOD)
+67.46, 53.43', Post (0.33' X 0.33' WOOD POST)
+67.70, 22.13', Lt. Pole (0.50' DIA. ALUM.)
+68.11, 32.35', Ret. Wall (CONC.)
+69.30, 31.76', Ret. Wall (STONE)
1188+00.29, 28.55', Ret. Wall (STONE)
+00.74, 29.71', Ret. Wall (STONE)
+08.14, 17.55', Wat. S.O.
+15.92, 14.06', Drop Inlet
+77.65, 20.43', Ret. Wall

ALL TOPOGRAPHY DESCRIBED FROM LINE "D", EXCEPT AS SHOWN.

Not for Construction

Clark Dietz
ENGINEERS

RECOMMENDED FOR APPROVAL _____ DESIGN ENGINEER DATE

DESIGNED: JAL DRAWN: MP
CHECKED: RBI CHECKED: JAL

INDIANA
DEPARTMENT OF TRANSPORTATION

EXISTING TOPOGRAPHY
US 27 SOUTHBOUND

HORIZONTAL SCALE	BRIDGE FILE
1" = 20'	
VERTICAL SCALE	DESIGNATION
NONE	0100701
SURVEY BOOK	SHEETS
	77 of 278
CONTRACT	PROJECT
R-30397	0100701

12:10:15 PM 8/26/2016 P:\0170190\Plans\Existing\17_EX_US27_SB_116.dgn

1189+01.81, 42.59', Sing. Post Sign (NO PARKING)
+10.49, 49.78', Ret. Wall (STONE)
+11.19, 50.23', Ret. Wall (STONE)
+14.71, 49.50', Ret. Wall (STONE)
+15.00, 51.07', Ret. Wall (STONE)
+19.86, 17.51', Sing. Post Sign (ROAD DIVISION SIGN)
+23.08, 53.75', Decid. Tr. (0.70' LOCUST)
+29.12, 47.15', Ret. Wall (STONE)
+29.60, 47.64', Ret. Wall (STONE)
+33.19, 46.70', Ret. Wall (STONE)
+34.51, 45.78', Ret. Wall (STONE)
+54.89, 42.65', Ret. Wall (STONE)
+55.84, 44.47', Ret. Wall (STONE)
+59.09, 42.69', Ret. Wall (STONE)
+59.50, 42.17', Ret. Wall (STONE)
+68.18, 48.87', Decid. Tr. (0.60' TULIP)
+84.82, 38.35', Ret. Wall (STONE)

1190+00

1190+88.76, 24.65', Lt. Pole (0.50' DIA. ALUM.)
+90.74, 23.28', Sing. Post Sign (ONE WAY)

SEC. 32, T14N, R1W
WAYNE TWP.
WAYNE CO.

+86.99, 29.32', Decid. Tr. (0.40' MAPLE)
+93.69, 37.75', Wd. Deck
+95.54, 24.73', Bush
1191+00.32, 36.83', Wd. Deck
+01.03, 41.05', Wd. Deck
+04.01, 20.69', Ret. Wall (CONC.)
+10.40, 24.49', Bush
+11.48, 34.13', Bush
+42.18, 22.80', Bush
+45.36, 14.42', Drop Inlet
+73.50, 24.96', Bush
+94.01, 18.90', Ret. Wall (CONC.)

SEE SHEET 68 FOR
CONTINUATION
OF 9th STREET

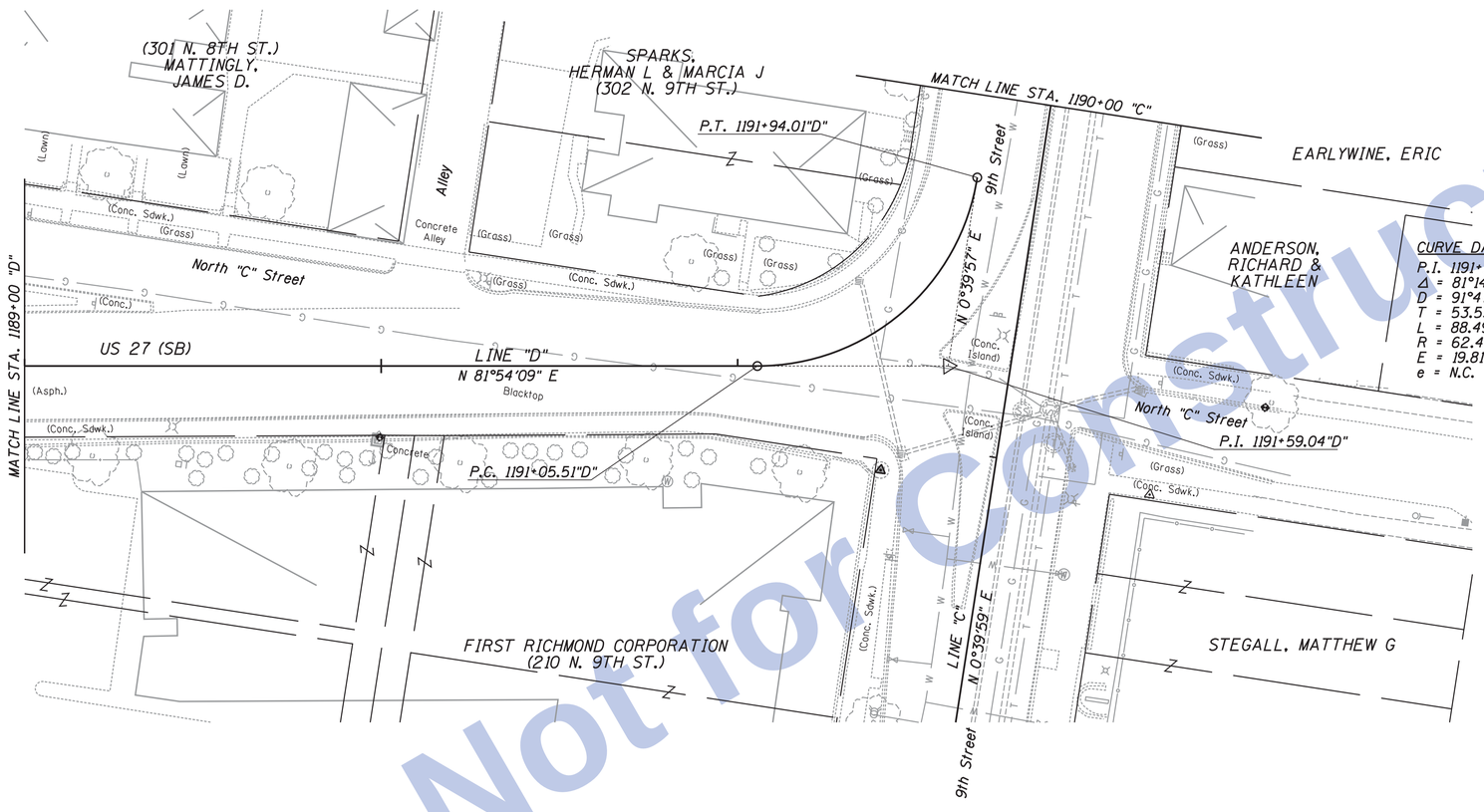

Not for Construction

1189+10.02, 19.84', Ret. Wall (STONE & CONC.)

+41.42, 16.22', Lt. Pole (0.70' ALUM.)

+97.60, 15.22', Sing. Post Sign (ONE WAY)
+98.71, 13.37', Ret. Wall (STONE & CONC.)
+99.89, 20.60', Comb. Pwr.

1190+21.30, 18.73', Ret. Wall (CONC.)

+63.50, 18.16', Ret. Wall (CONC.)

1191+14.65, 92.55', Ret. Wall (STONE)
+21.49, 87.20', Wat. S.O.
+24.95, 60.30', Sing. Post Sign (STOP)
+26.02, 58.75', Sing. Post Sign (DO NOT ENTER)
+28.03, 35.51', Cant. Sign (ALL TRAFFIC TURN RIGHT)
+28.05, 35.52', Cant. Sign (ALL TRAFFIC TURN RIGHT)
+28.72, 54.87', Wat. S.O.
+32.16, 33.45', Drop Inlet
+43.84, 85.28', Wat. S.O.
+43.86, 85.54', Wat. S.O.
+44.03, 85.95', Wat. Meter
+44.25, 86.23', Wat. Meter
+50.54, 72.11', Sing. Post Sign (NO PARKING)
+50.62, 70.60', Lt. Pole (0.50' DIA. ALUM.)
+53.57, 64.31', Cb. Inlet
+54.17, 55.78', Tel. Mh.
+54.21, 43.33', Sph. Mh.
+55.60, 88.68', Fa. (APP. PL.)
+59.51, 22.14', Sing. Post Sign (DO NOT ENTER)
+62.16, 25.03', Lt. Pole (0.50' DIA. ALUM.)
+64.65, 20.61', Dbl. Post Sign (IN. 22' & US27)
+67.94, 65.55', Drop Inlet
+70.18, 63.54', Sing. Post Sign (STOP)
+72.38, 60.85', Ret. Wall (CONC.)
+74.41, 99.08', Decid. Tr. (4.00' SYCAMORE)

+84.79, 54.58', Ret. Wall (CONC.)
+87.70, 54.05', Ret. Wall (CONC.)

Clark Dietz
ENGINEERS

RECOMMENDED FOR APPROVAL _____ DESIGN ENGINEER DATE

DESIGNED: JAL | DRAWN: MP
CHECKED: RBI | CHECKED: JAL

INDIANA
DEPARTMENT OF TRANSPORTATION

EXISTING TOPOGRAPHY
US 27 SOUTHBOUND

HORIZONTAL SCALE	BRIDGE FILE
1" = 20'	
VERTICAL SCALE	DESIGNATION
NONE	0100701
SURVEY BOOK	SHEETS
	78 of 278
CONTRACT	PROJECT
R-30397	0100701

12:10:17 PM 8/26/2016 P:\0170190\Plans\Existing\18_EX_US27_SB_117.dgn

SEC. 32, T14N, R1W
WAYNE TWP.
WAYNE CO.

1186+30.67, 32.60', C.L.T.F.
+45.85, 33.00', C.L.T.F.
+47.08, 82.32', Ret. Wall (Conc.)
+47.13, 52.13', Ret. Wall (Conc.)
+47.16, 32.91', Ret. Wall (Conc.)
+47.89, 54.89', Ret. Wall (Conc.)
+47.90, 82.36', Ret. Wall (Conc.)
+47.96, 33.01', Ret. Wall (Conc.)
+48.53, 32.71', Ret. Wall (Conc.)
+48.82, 32.82', Ret. Wall (Conc.)
+50.15, 23.28', Sing. Post Sign (LEFT LANE MUST TURN LEFT)
+58.31, 21.68', Lt. Pole (0.60' DIA. ALUM.)
+63.85, 32.81', Ret. Wall (STONE)
+66.61, 32.81', Ret. Wall (STONE)
+68.66, 33.99', Sing. Post Sign (3 STONE STEPS)
+71.47, 34.01', Ret. Wall (STONE)
+71.64, 33.06', Ret. Wall (STONE)
+85.02, 33.54', Ret. Wall (STONE)
+85.25, 32.83', Ret. Wall (STONE)
+89.87, 33.66', Ret. Wall (Conc.)
+89.96, 32.65', Ret. Wall (Conc.)

1187+15.80, 22.92', Sing. Post Sign (NO PARKING)
+26.44, 33.57', Ret. Wall (Conc.)
+26.44, 33.57', Ret. Wall (STONE)
+30.67, 33.57', Ret. Wall (STONE)
+30.94, 32.65', Ret. Wall (STONE)
+35.78, 23.65', Wat. S.O.
+36.07, 23.47', Wat. Meter
+48.38, 33.75', Ret. Wall (STONE)
+49.29, 32.90', Ret. Wall (STONE)
+54.08, 33.79', Ret. Wall (STONE)
+54.17, 32.91', Ret. Wall (STONE)
+73.01, 33.74', Ret. Wall (STONE)
+73.25, 38.98', Ret. Wall (STONE)
+74.09, 32.76', Ret. Wall (STONE)
+74.27, 33.98', Ret. Wall (STONE)
+74.55, 38.96', Ret. Wall (STONE)
+99.50, 23.70', Wat. S.O.

1188+03.46, 24.08', Sing. Post Sign (NO PARKING)
+06.53, 33.08', Ret. Wall (STONE)
+06.53, 34.14', Ret. Wall (STONE)
+11.84, 33.01', Ret. Wall (STONE)
+11.86, 33.03', Ret. Wall (STONE)
+12.74, 21.71', Lt. Pole (0.50' DIA. ALUM.)
+21.20, 22.76', Decid. Tr. (1.50' MAPLE)
+23.32, 23.00', F. Hyd.
+24.32, 23.00', F. Hyd.
+29.05, 33.08', Ret. Wall (STONE)
+28.81, 34.02', Ret. Wall (STONE)
+39.61, 20.24', Wat. S.O.
+67.08, 24.94', Sing. Post Sign (STOP)
+68.53, 25.50', Sing. Post Sign (DO NOT ENTER)
+76.05, 21.34', Wat. S.O.
+91.61, 31.56', Cant. Sign (WITH SIGN (ALL TRAFFIC TURN RIGHT))
+91.60, 31.60', Cant. Sign (WITH SIGN (ALL TRAFFIC TURN RIGHT))
+96.86, 26.57', Drop Inlet
+97.10, 26.66', Cont. Sign (T.O. 1.00' VCP)
+97.23, 27.02', Drop Inlet
1189+04.91, 16.45', Cont. Sign (T.O. 1.00' VCP)
+34.18, 3.41', Lt. Pole (0.50' DIA. ALUM.)
+35.43, 74.85', Ret. Wall (Conc.)
+35.70, 74.89', Ret. Wall (Conc.)
+36.18, 75.03', Ret. Wall (Conc.)
+37.38, 70.07', Ret. Wall (Conc.)
+38.13, 83.84', Bush
+38.46, 62.65', Ret. Wall (Conc.)
+39.39, 62.97', Ret. Wall (Conc.)
+39.98, 71.03', Bush
+41.36, 92.99', Decid. Tr. (0.40' MAPLE)
+39.26, 5.71', Dbl. Post Sign (IN 27 & US27)
+43.45, 62.57', Ret. Wall (Conc.)
+47.65, 53.00', Bush
+48.39, 48.81', Ret. Wall (Conc.)
+48.99, 49.01', Ret. Wall (Conc.)
+49.49, 72.17', Bush
+50.17, 80.65', Wd. Deck
+50.61, 80.96', Wd. Deck
+50.81, 80.89', Wd. Deck
+55.09, 80.89', Wd. Deck
+62.15, 40.31', Ret. Wall (Conc.)
+62.66, 41.15', Ret. Wall (Conc.)
+63.41, 44.41', Bush
+76.50, 37.16', Ret. Wall (Conc.)
+76.52, 36.46', Ret. Wall (Conc.)
+78.34, 42.80', Bush
+81.70, 38.33', Bush
+82.75, 36.12', Ret. Wall (Conc.)
+82.86, 36.71', Ret. Wall (Conc.)
+88.02, 36.82', Ret. Wall
+89.12, 36.61', Ret. Wall
+90.19, 37.50', Bush

1190+00

1190+03.39, 42.07', Decid. Tr. (0.80' CRABAPPLE)
+08.69, 90.84', Decid. Tr.
+09.34, 99.61', Decid. Tr.
+22.71, 38.41', Bush
+24.72, 36.11', Ret. Wall
+24.78, 36.77', Ret. Wall
+30.24, 35.99', Ret. Wall
+30.55, 35.85', Ret. Wall
+31.20, 38.37', Bush
+43.79, 39.12', Wat. Meter
+43.99, 30.26', Drop Inlet
+44.43, 23.18', Cont. Sign
(T.O. 1.00' BIP WITH A 1.20' SIPHON CAP)
+53.73, 36.90', Ret. Wall
+53.80, 36.08', Ret. Wall
+58.08, 35.77', Ret. Wall
+59.05, 36.02', Ret. Wall
+71.96, 32.54', Lt. Pole (0.50' DIA. ALUM)
+91.00, 32.72', Sing. Post Sign (NO PARKING)

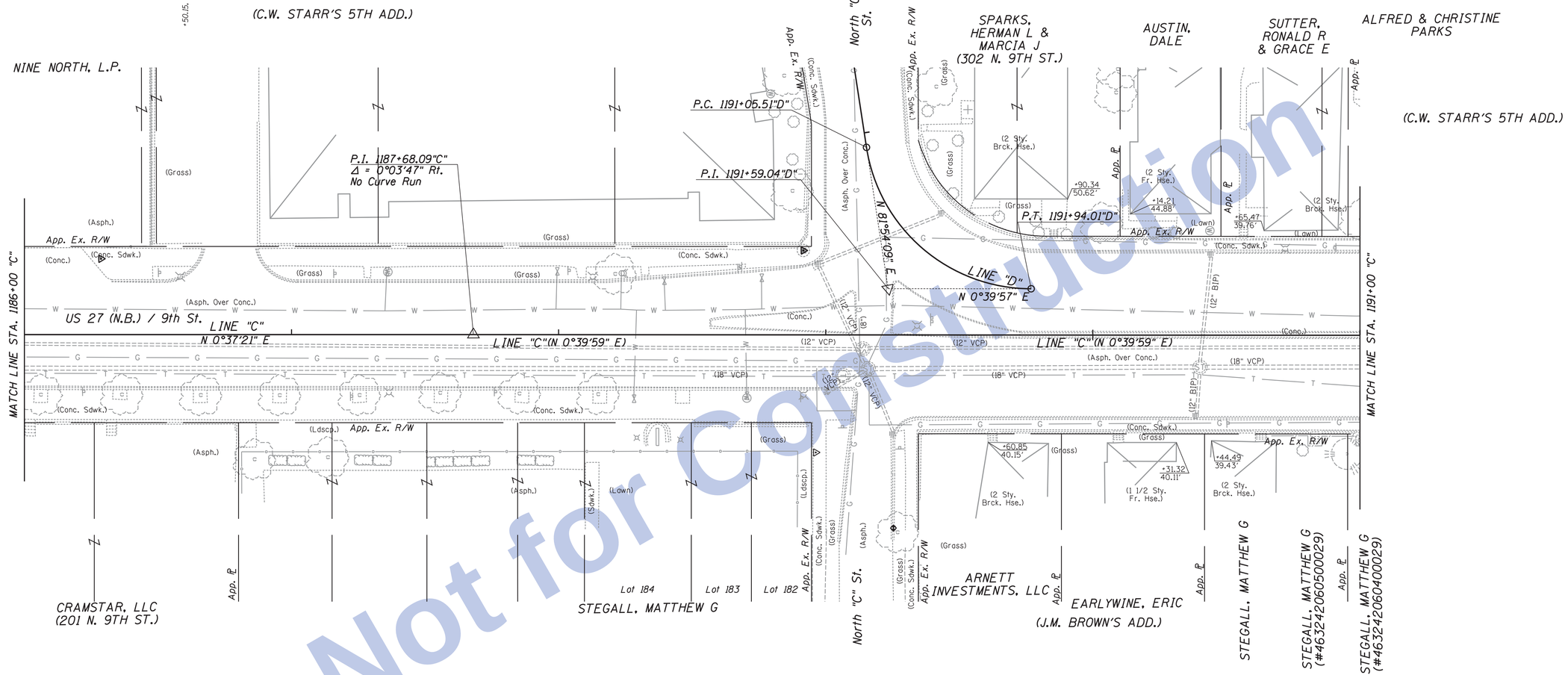

1186+04.84, 32.82', Ret. Wall (Conc.)
+04.91, 33.68', Ret. Wall (Conc.)
+06.20, 22.47', Decid. Tr. (0.30' CRABAPPLE)
+21.75, 21.24', Sing. Post Sign (NO PARKING)
+23.76, 33.70', Ret. Wall (Conc.)
+29.16, 32.85', Ret. Wall (Conc.)
+35.65, 33.03', Ret. Wall (Conc.)
+36.03, 33.72', Ret. Wall (Conc.)
+36.56, 22.43', Decid. Tr. (1.00' LOCUST)
+66.07, 22.63', Decid. Tr. (0.40' CRABAPPLE)
+78.97, 35.85', Ret. Wall (Conc.)
+79.02, 33.55', Ret. Wall (Conc.)
+79.02, 36.59', Ret. Wall (Conc.)
+81.43, 43.98', Fe.
+81.48, 43.95', Fe.
+86.19, 54.65', Fe.
+86.23, 46.66', Decid. Tr. (1.00' REDBUD)
+90.59, 47.11', Hedge
+95.63, 22.68', Decid. Tr. (0.50' LOCUST)
1187+04.25, 43.97', Fe.
+05.14, 47.31', Hedge
+13.68, 45.90', Decid. Tr. (1.20' REDBUD)
+22.05, 23.09', Sing. Post Sign (2 WAY TRAFFIC AHEAD)
+22.43, 46.96', Hedge
+25.51, 22.63', Decid. Tr. (0.30' CRABAPPLE)
+36.47, 21.61', Lt. Pole (0.50' DIA. ALUM.)
+37.26, 47.25', Hedge
+50.46, 47.77', Hedge
+55.72, 21.79', Decid. Tr. (0.50' CRABAPPLE)
+74.17, 47.31', Hedge
+75.94, 21.32', Sing. Post Sign (NO PARKING)
+83.24, 47.00', Hedge
+85.40, 22.04', Decid. Tr. (0.30' CRABAPPLE)
1188+14.88, 22.26', Decid. Tr. (0.50' CRABAPPLE)
+28.27, 23.95', Wat. S.O.
+29.29, 38.57', Grnd. Light
+32.84, 41.83', Ret. Wall (STONE)
+32.96, 41.61', Ret. Wall (STONE)
+33.36, 41.88', Ret. Wall (STONE)
+33.90, 36.89', Ret. Wall (STONE)
+36.61, 35.10', Comm. Sign
(STEGAL BERHEIDE OWR FUNERAL CHAPEL)
+36.61, 41.49', Ret. Wall (STONE)
(STEGAL BERHEIDE OWR FUNERAL CHAPEL)
+36.93, 32.77', Ret. Wall (STONE)
+37.58, 33.56', Ret. Wall (STONE)
+40.08, 40.23', Ret. Wall (STONE)
+40.28, 40.23', Ret. Wall (STONE)
+40.77, 35.53', Ret. Wall (STONE)
+41.50, 40.15', Ret. Wall (STONE)
+50.61, 33.37', Ret. Wall (Conc.)
+50.83, 33.57', Ret. Wall (Conc.)
+51.06, 34.49', Ret. Wall (Conc.)
+70.18, 23.28', Wat. Meter
+70.48, 23.68', Wat. Meter
+70.53, 24.44', Wat. Meter
+70.56, 22.78', Wat. S.O.
+89.51, 72.68', Fe. (APP. PL)
+89.66, 43.63', Fe. (APP. PL)
+90.60, 23.47', Sing. Post Sign (NO PARKING)
+93.70, 24.41', Sing. Post Sign (50 DIA. ALUM.)
+93.60, 34.48', Ret. Wall (Conc.)
+93.62, 33.64', Ret. Wall (Conc.)
1189+00.38, 21.80', Cont. Sign (T.O. 0.60' PLASTIC)
+00.88, 21.22', Cb. Inlet
+02.48, 17.82', Cont. Sign (T.O. 0.60' PLASTIC)
+02.62, 4.84', Cont. Sign (T.O. 1.00' VCP)
+06.27, 34.82', Sign Post Sign (DO NOT ENTER)
+06.41, 16.82', Fe.
+13.05, 5.03', Cont. Sign (T.O. 1.00' VCP)
+13.94, 5.93', Sgn. Mh.
+15.54, 12.61', Cont. Sign (T.O. 1.00' VCP)
+24.98, 37.24', Drop Inlet
+25.31, 36.15', Cont. Sign (T.O. 1.00' VCP)
+25.31, 37.22', Drop Inlet
+27.70, 41.52', Cont. Sign (T.O. 1.00' SYCAMORE)
+27.73, 42.72', Sing. Post Sign (STOP)
+28.97, 5.25', Cont. Sign (T.O. 1.00' VCP)
+34.90, 36.21', Ret. Wall (Conc.)
+35.02, 36.62', Ret. Wall (Conc.)
+35.50, 61.72', Ret. Wall (Conc.)
+35.60, 61.72', Ret. Wall (Conc.)
+41.97, 37.09', Ret. Wall (Conc.)
+59.68, 35.99', Ret. Wall (Conc.)
+59.96, 36.81', Ret. Wall (Conc.)
+65.15, 36.14', Ret. Wall (Conc.)
+65.41, 36.77', Ret. Wall (Conc.)
1190+06.73, 36.79', Ret. Wall (Conc.)
+06.87, 36.91', Ret. Wall (Conc.)
+12.50, 36.02', Ret. Wall (Conc.)
+12.55, 36.67', Ret. Wall (Conc.)
+38.49, 30.21', Drop Inlet
+39.06, 29.78', Cont. Sign
(T.O. 1.00' BIP WITH A 1.20' SIPHON CAP)
+39.15, 29.02', Cont. Sign (T.O. 1.50' VCP)
+40.15, 10.88', Cont. Sign (T.O. 1.50' VCP)
+40.15, 11.99', Sgn. Mh.
+40.22, 12.63', Cont. Sign
(T.O. 1.00' BIP WITH A 1.20' SIPHON CAP)
+41.06, 12.04', Cont. Sign (T.O. 1.50' VCP)
+50.20, 32.89', Sing. Post Sign (SPEED LIMIT 35)
+60.12, 36.74', Ret. Wall (Conc.)
+60.69, 35.99', Ret. Wall (Conc.)
+63.29, 35.59', Ret. Wall (Conc.)
+66.33, 36.69', Ret. Wall (Conc.)
+66.94, 37.79', Wood Fe.
+78.58, 43.14', Bush
+80.65, 37.73', Wood Fe.
+80.69, 41.55', Wood Fe.
+80.70, 38.03', Ret. Wall (Conc.)
+80.92, 36.72', Ret. Wall (Conc.)
+85.76, 36.03', Ret. Wall (Conc.)
+85.90, 37.80', Wood Fe.
+85.92, 41.50', Wood Fe.
+95.17, 44.41', Comm. Tr. (0.30' SPRUCE)
+98.61, 37.90', Wood Fe.
+98.67, 41.67', Wood Fe.
+98.91, 36.66', Ret. Wall (CONC.)
+98.93, 36.05', Ret. Wall (CONC.)

ALL TOPOGRAPHY DESCRIBED FROM LINE "C", EXCEPT AS SHOWN.

TBM #20: Bt. Spk. Set S Side of 48" Sycamore ✪ N "C" St. Sta. 1189+25.41"C", 72.27' Rt. Adjusted El. = 977.599

Not for Construction

Clark Dietz ENGINEERS

RECOMMENDED FOR APPROVAL _____ DESIGN ENGINEER DATE

DESIGNED: JAL DRAWN: MP
CHECKED: RBI CHECKED: JAL

INDIANA DEPARTMENT OF TRANSPORTATION

EXISTING TOPOGRAPHY
US 27

HORIZONTAL SCALE	BRIDGE FILE
1" = 20'	
VERTICAL SCALE	DESIGNATION
NONE	0100701
SURVEY BOOK	SHEETS
	79 of 278
CONTRACT	PROJECT
R-30397	0100701

12:10:18 PM 8/26/2016 P:\0170190\Plans\Existing\19_EX_US27_24.dgn

1195+00

SEC. 32, T14N, R1W
WAYNE TWP.
WAYNE CO.

1191+00.38, 43.40'; Decid. Tr. (1.50' TWIN ELM)
+10.84, 36.83'; Ret. Wall
+10.99, 36.03'; Ret. Wall
+14.21, 52.84'; Bush (2 CONC. STEPS)
+16.17, 36.80'; Ret. Wall
+16.34, 36.13'; Ret. Wall
+26.31, 51.96'; Bush
+36.88, 36.85'; Ret. Wall
+37.01, 36.10'; Ret. Wall
+42.13, 36.87'; Ret. Wall
+42.17, 36.14'; Ret. Wall
+44.43, 37.32'; Bush
+51.24, 51.10'; Bush
+57.83, 36.16'; Ret. Wall
+57.84, 37.08'; Ret. Wall
+58.20, 36.37'; Ret. Wall (WOOD)
+73.22, 37.77'; Cont. Sign
(WITH SIGN (ALL TRAFFIC TURN RIGHT)
+73.23, 8.41'; Cant. Sign
(WITH SIGN (ALL TRAFFIC TURN RIGHT)
+73.26, 33.58'; Wat. Arm Pole (LED TRAFFIC SIGNAL)
+75.89, 37.22'; Bush
+78.82, 36.27'; Ret. Wall (WOOD)
+85.60, 36.41'; Ret. Wall (STONE)
+85.70, 37.10'; Ret. Wall (STONE)
+87.63, 36.97'; Wat. S.O.
+87.63, 36.97'; Wat. S.O.
+88.53, 37.25'; Ret. Wall (STONE)
+88.60, 36.72'; Ret. Wall (STONE)
+93.01, 37.51'; Wat. S.O.
+99.45, 36.60'; Ret. Wall (STONE)
+99.74, 37.56'; Ret. Wall (STONE)
1192+04.35, 36.78'; Ret. Wall (STONE)
+04.43, 37.71'; Ret. Wall (STONE)
+06.51, 36.54'; Ret. Wall (STONE)
+06.62, 38.54'; Flag Pole (0.10' DIA. STEEL)
+06.80, 37.30'; Ret. Wall (STONE)
+16.59, 40.50'; Decid. Tr. (1.00' MAPLE)
+23.79, 32.34'; Lt. Pole (0.60' DIA. ALUM.)
+24.35, 41.46'; Pole (0.30' DIA. STEEL)
+26.61, 37.78'; Ret. Wall (STONE)
+26.16, 36.91'; Ret. Wall (STONE)
+29.56, 39.77'; Ret. Wall (STONE)
+30.08, 39.02'; Ret. Wall (STONE)
+30.92, 39.36'; Ret. Wall (STONE)
+33.79, 42.10'; Ret. Wall (0.10' WOOD)
+35.63, 45.87'; Ret. Wall (0.10' WOOD)
+35.96, 46.07'; Ret. Wall (0.10' WOOD)
+37.28, 41.24'; Sing. Post Sign (STOP)
+59.72, 31.33'; Cant. Sign (T.O. 1.00' VCP)
+70.36, 36.53'; Cant. Sign (T.O. 1.00' VCP)
+71.02, 37.03'; Drop Inlet
+81.49, 37.72'; Sing. Post Sign (NO LEFT TURN)

1193+07.53, 50.41'; Wd. Deck
+17.52, 50.43'; Wd. Deck
+19.58, 50.37'; Wd. Deck
+20.98, 30.33'; Ret. Wall
+21.14, 30.69'; Ret. Wall
+21.63, 30.65'; Ret. Wall
+21.65, 37.14'; Ret. Wall
+26.92, 37.60'; Ret. Wall
+27.05, 37.11'; Ret. Wall
+28.49, 29.62'; Beam G.R.
+41.48, 23.45'; Beam G.R.
+53.30, 31.21'; Lt. Pole (0.50' ALUM.)

1194+03.91, 29.31'; Beam G.R.

(C.W. STARR'S 5TH ADD.)

ALFRED & CHRISTINE PARKS

HOWELL, ALBERT T REVOCABLE LIVING TRUST

North "D" St.

STAMPER, EARL E & DOROTHY M

WISE AUTO PARTS, INC

KIRKENDALL, CLINTON L & DONNA

(2 Sty. Brck. Hse.)
(2 Sty. Fr. Hse.)
(1 1/2 Sty. Fr. Hse.)
(1 1/2 Sty. Brck. Hse.)
App. ℄
App. Ex. R/W
+52.41 53.37'
+63.36 41.51'
+23.79 51.53'
+91.94 56.07'
+60.94 48.48'
+11.82 45.89'
+07.31 48.44'
(Lawn)
(Grass)
(Asph.)
(Conc. Sdwk.)
(Asph. Over Conc.)
(Conc.)
(12" VCP)
(18" VCP)
(12" BIP)
MATCH LINE STA. 1191+00 "C"
MATCH LINE STA. 1196+00 "C"
US 27 / 9th St.
LINE "C" (N 0°39'59" E)
P.C. 1195+40.22"C"

STEGALL, MATTHEW G (#463242060400029)

STEGALL, MATTHEW G (#463242060300029)

KOSCHNICK, CHARLES J

(J.M. BROWN'S ADD.)

PARKER, RICHARD E & KATHY L DBA: RICHMOND HARDWARE & ETAL (#463242050500029)

CURVE DATA
P.I. 1199+41.96"C"
Δ = 15° 59' 52" (RT)
D = 2° 00' 15"
T = 401.74'
L = 798.25'
R = 2,858.91'
E = 28.09'
e = N.C.

1191+03.76, 36.05'; Ret. Wall (CONC.)
+03.77, 36.87'; Ret. Wall (CONC.)
+03.94, 37.95'; Wood Fe.
+03.97, 41.43'; Wood Fe.
+24.81, 41.54'; Wood Fe.
+24.86, 41.64'; Wood Fe.
+25.19, 36.62'; Ret. Wall (CONC.)
+25.84, 36.66'; Ret. Wall (CONC.)
+30.04, 36.33'; Ret. Wall (CONC.)
+30.02, 36.03'; Ret. Wall (CONC.)
+30.01, 41.49'; Wood Fe.
+30.17, 41.71'; Wood Fe.
+41.27, 44.17'; Conif. Tr. (0.30' SPRUCE)
+53.81, 42.52'; Wood Fe. (APP. PL)
+54.09, 35.04'; Wood Fe. (APP. PL)
+56.49, 36.83'; Wood Fe.
+58.91, 32.95'; Lt. Pole (0.50' DIA. ALUM.)
+61.74, 35.97'; Ret. Wall (CONC.)
+61.84, 36.60'; Ret. Wall (CONC.)
+64.19, 36.61'; Ret. Wall (CONC.)
+64.28, 36.62'; Ret. Wall (CONC.)

1192+10.25, 33.35'; Sing. Post Sign (NO LEFT TURN)

+39.95, 4.50'; Cont. Sign (T.O. 1.50' VCP)
+40.75, 4.16'; San. Mh.
+41.88, 4.34'; Cont. Sign (T.O. 1.50' VCP)

+72.27, 37.71'; Ret. Wall (CONC.)
+72.35, 37.05'; Ret. Wall (CONC.)
+73.64, 41.36'; Sing. Post
+73.74, 29.15'; Beam G.R.
+79.84, 24.37'; Drop Inlet
+80.04, 23.66'; Cont. Sign
(T.O. 1.00' BIP WITH A 1.20' X 1.20' SIPHON CAP)
+80.07, 12.88'; Cont. Sign
(T.O. 1.00' BIP WITH A 1.20' X 1.20' SIPHON CAP)
+80.12, 37.06'; Cont. Sign (T.O. 1.50' VCP)
+86.45, 37.06'; Ret. Wall (CONC.)
+86.66, 37.71'; Ret. Wall (CONC.)
+87.53, 29.46'; Beam G.R.

1193+04.98, 31.12'; Lt. Pole (0.50' ALUM.)

+72.29, 42.94'; Ret. Wall (CONC.)
+72.34, 38.70'; Ret. Wall (CONC.)
+72.41, 41.47'; Ret. Wall (CONC.)
+73.32, 39.91'; Ret. Wall (CONC.)
+73.37, 43.00'; Ret. Wall (CONC.)
+73.53, 49.58'; Ret. Wall (CONC.)

1194+05.66, 29.41'; Beam G.R.

+16.56, 39.57'; Ret. Wall (CONC.)
+16.62, 40.51'; Ret. Wall (CONC.)

ALL TOPOGRAPHY DESCRIBED FROM LINE "C", EXCEPT AS SHOWN.

Not for Construction

Clark Dietz
ENGINEERS

RECOMMENDED FOR APPROVAL _____ DESIGN ENGINEER DATE

DESIGNED: JAL DRAWN: MP
CHECKED: RBI CHECKED: JAL

INDIANA
DEPARTMENT OF TRANSPORTATION

EXISTING TOPOGRAPHY
US 27

HORIZONTAL SCALE	BRIDGE FILE
1" = 20'	
VERTICAL SCALE	DESIGNATION
NONE	0100701
SURVEY BOOK	SHEETS
	80 of 278
CONTRACT	PROJECT
R-30397	0100701

12:10:20 PM 8/26/2016 P:\0170190\Plans\Existing\20_EX_US27_25.dgn

SEC. 32, T14N, R1W
WAYNE TWP.
WAYNE CO.

1200+00

CURVE DATA
P.I. 1199+41.96"C"
Δ = 15° 59′ 52" (RT)
D = 2° 00′ 15"
T = 401.74′
L = 798.25′
R = 2,858.91′
E = 28.09′
e = N.C.

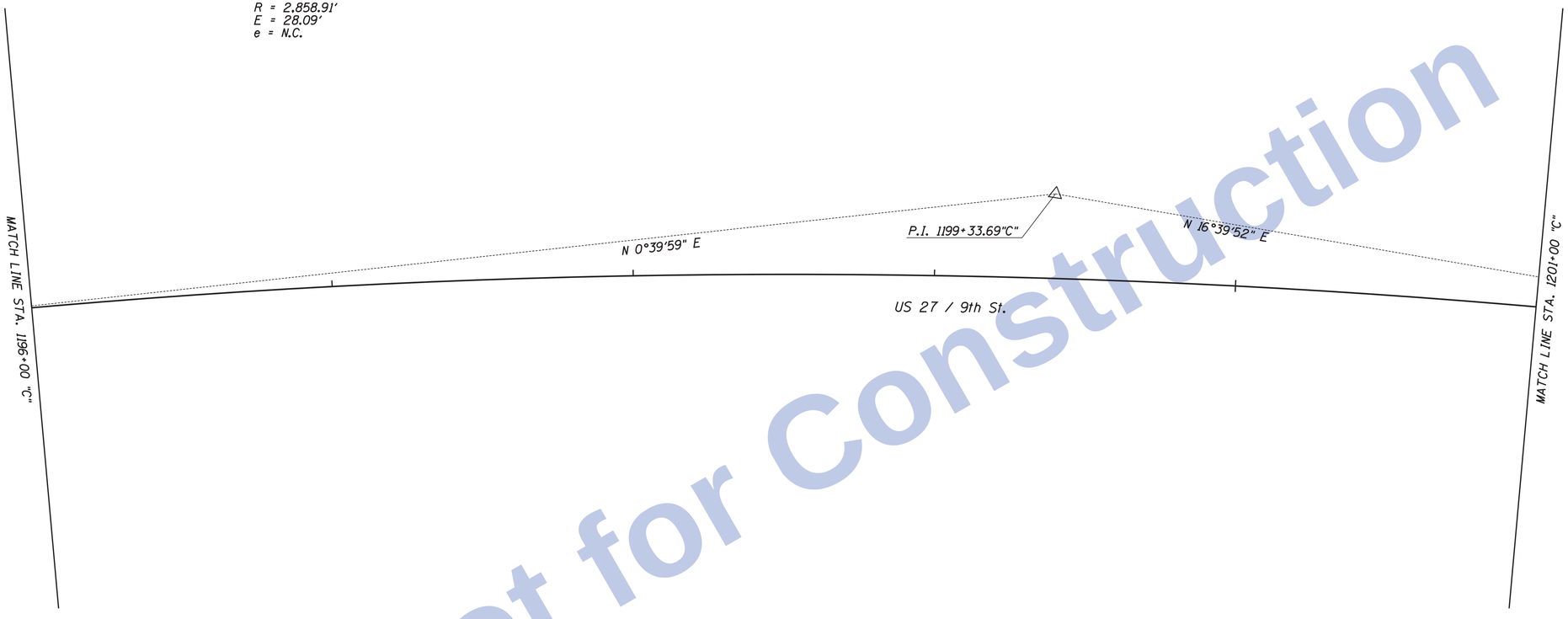

Not for Construction

ALL TOPOGRAPHY DESCRIBED
FROM LINE "C", EXCEPT AS SHOWN.

12:10:22 PM 8/26/2016 P:\0170190\Plans\Existing\21_EX_US27_26.dgn

Clark Dietz
ENGINEERS

RECOMMENDED FOR APPROVAL _____ DESIGN ENGINEER DATE

DESIGNED: JAL DRAWN: MP
CHECKED: RBI CHECKED: JAL

INDIANA
DEPARTMENT OF TRANSPORTATION

EXISTING TOPOGRAPHY
US 27

HORIZONTAL SCALE	BRIDGE FILE
1" = 20′	
VERTICAL SCALE	DESIGNATION
NONE	0100701
SURVEY BOOK	SHEETS
	81 of 278
CONTRACT	PROJECT
R-30397	0100701

SEC. 32, T14N, R1W
WAYNE TWP.
WAYNE CO.

1205+00

1203+62.16, 32.22', Lt. Pole (0.50' DIA. ALUM.)

1204+09.15, 24.59', Drop Inlet
+09.33, 24.08', Cont. Sign (T.O. 1.00' VCP)

1205+21.45, 31.45', Lt. Pole (0.50' DIA ALUM.)

CURVE DATA

P.I. 1199+41.96"C"
Δ = 15° 59' 52" (RT)
D = 2° 00' 15"
T = 401.74'
L = 798.25'
R = 2,858.91'
E = 28.09'
e = N.C.

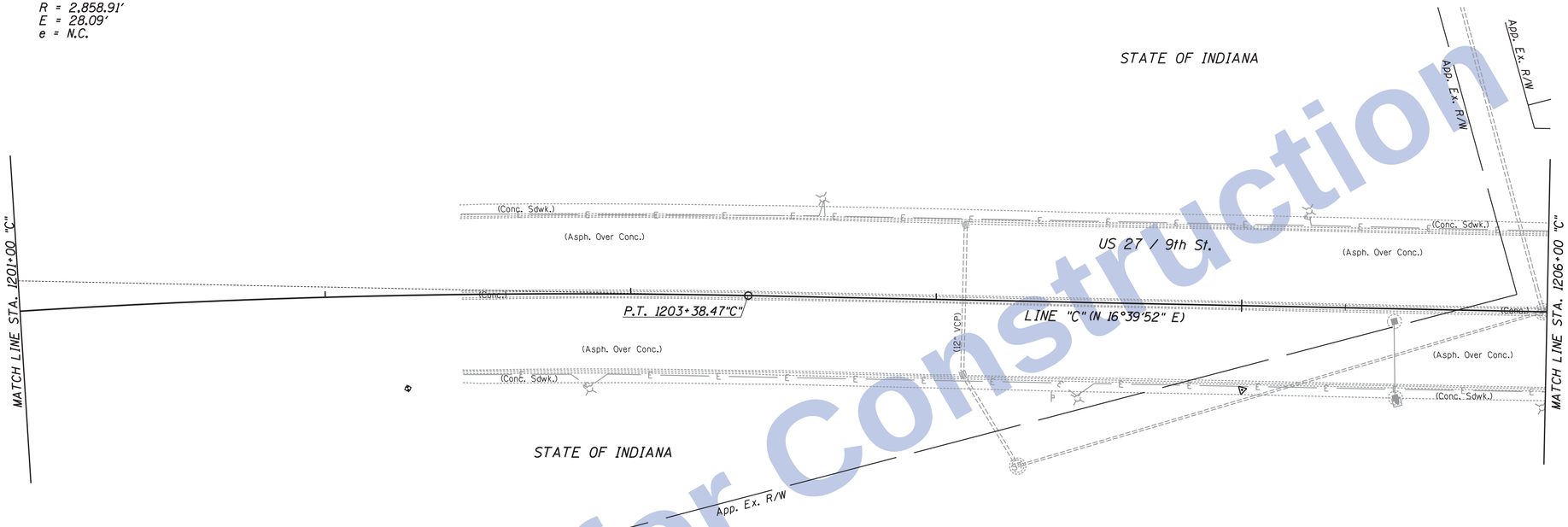

Not for Construction

1202+86.64, 31.07', Lt. Pole (0.50' DIA. ALUM.)

1204+09.16, 23.38', Cont. Sign (T.O. 1.00' VCP)
+09.26, 24.34', Drop Inlet
+10.35, 24.40', Cont. Sign
(T.O. 1.00' VCP WITH A 1.20' x 1.20' CONC. CAP)

+21.24, 23.85', Cont. Sign
(T.O. 1.00' VCP WITH A 1.20' x 1.20' CONC. CAP)

+38.35, 30.99', Sing. Post Sign (PEDESTRIAN CROSSING)

+46.90, 31.45', Lt. Pole (0.50' DIA. ALUM.)

1205+50.13, 4.15', Cont. Sign
(WITH SIGNS US27 N. & IN 227 N. & IN 121 N.)
+50.94, 29.14', Cont. Sign
(WITH SIGNS US27 N. & IN 227 N. & IN 121 N.)
+51.45, 30.54', Mst. Arm Pole (1.20' OCTAGONAL STEEL)

+98.97, 31.41', Lt. Pole (0.50' DIA. ALUM.)

ALL TOPOGRAPHY DESCRIBED
FROM LINE "C", EXCEPT AS SHOWN.

TBM #21: Cut Square S Handrail Walkon to
NE Cor. STR. N "F" St.
Sta. 1202+26.50"C", 30.49' Rt.
Adjusted El. = 981.958

Clark Dietz
ENGINEERS

RECOMMENDED FOR APPROVAL _____ DESIGN ENGINEER DATE

DESIGNED: JAL DRAWN: MP
CHECKED: RBI CHECKED: JAL

INDIANA
DEPARTMENT OF TRANSPORTATION

EXISTING TOPOGRAPHY
US 27

HORIZONTAL SCALE	BRIDGE FILE
1" = 20'	
VERTICAL SCALE	DESIGNATION
NONE	0100701
SURVEY BOOK	SHEETS
	82 of 278
CONTRACT	PROJECT
R-30397	0100701

12:10:23 PM 8/26/2016 P:\0170190\Plans\Existing\22_EX_US27_27.dgn

SEC. 32, T14N, R1W
WAYNE TWP.
WAYNE CO.

1206+57.33, 30.32'; Sing. Post Sign (S. IN.27 S. IN.227)
•67.49, 31.17'; Lt. Pole (0.50' DIA. ALUM.)
1207+09.10, 24.62'; Drop Inlet
•09.15, 23.88'; Cont. Sign (T.O. 1.00' VCP)
•09.15, 34.85'; Cont. Sign (T.O. 1.00' VCP)
•09.18, 24.39'; Drop Inlet
•09.38, 25.10'; Cont. Sign (T.O. 1.00' VCP)
(WITH 1.20' x 1.20' STEEL SIPHON CAP)
•09.78, 24.46'; Cont. Sign
(WITH 1.20' x 1.20' STEEL SIPHON CAP)
•09.78, 24.46'; Cont. Sign (T.O. 1.00' CONC.)
•30.63, 35.46'; Cont. Sign (T.O. 1.00' CONC.)
(WITH 1.20' x 1.20' STEEL SIPHON CAP)
•30.63, 35.46'; Cont. Sign
(WITH 1.20' x 1.20' STEEL SIPHON CAP)
•43.42, 38.05'; Sign Post Sign
(CHESTER BLVD. & N. G ST.)
•48.22, 43.96'; Sing. Post Sign (STOP)
•78.67, 53.98'; Dr. MH.
1208+25.16, 28.15'; Lt. Pole (0.50' ALUM)
•36.21, 45.14'; Pwp.
1209+31.06, 48.30'; Mbox. (0.10' DIA STEEL POST)
•35.84, 79.12'; Cont. Sign (T.O. 1.00' CONC.)
•50.48, 42.15'; Pwp.
•53.67, 43.95'; Gas Anchor
•54.21, 39.08'; Bush
•66.91, 32.56'; Lt. Pole (0.50' DIA. ALUM.)
•68.41, 33.06'; Sing. Post Sign (PEDESTRIAN CROSS)
1210+00
1210+20.11, 41.56'; Post (0.50' DIA. STEEL)
•21.20, 37.14'; Comm. Sign
(WHITEWATER VALLEY REHABILITATION)
•21.18, 47.12'; Comm. Sign
(WHITEWATER VALLEY REHABILITATION)
•31.34, 33.50'; Sing. Post Sign (SPEED LIMIT 35)
•97.58, 32.67'; Lt. Pole (0.50' ALUM.)

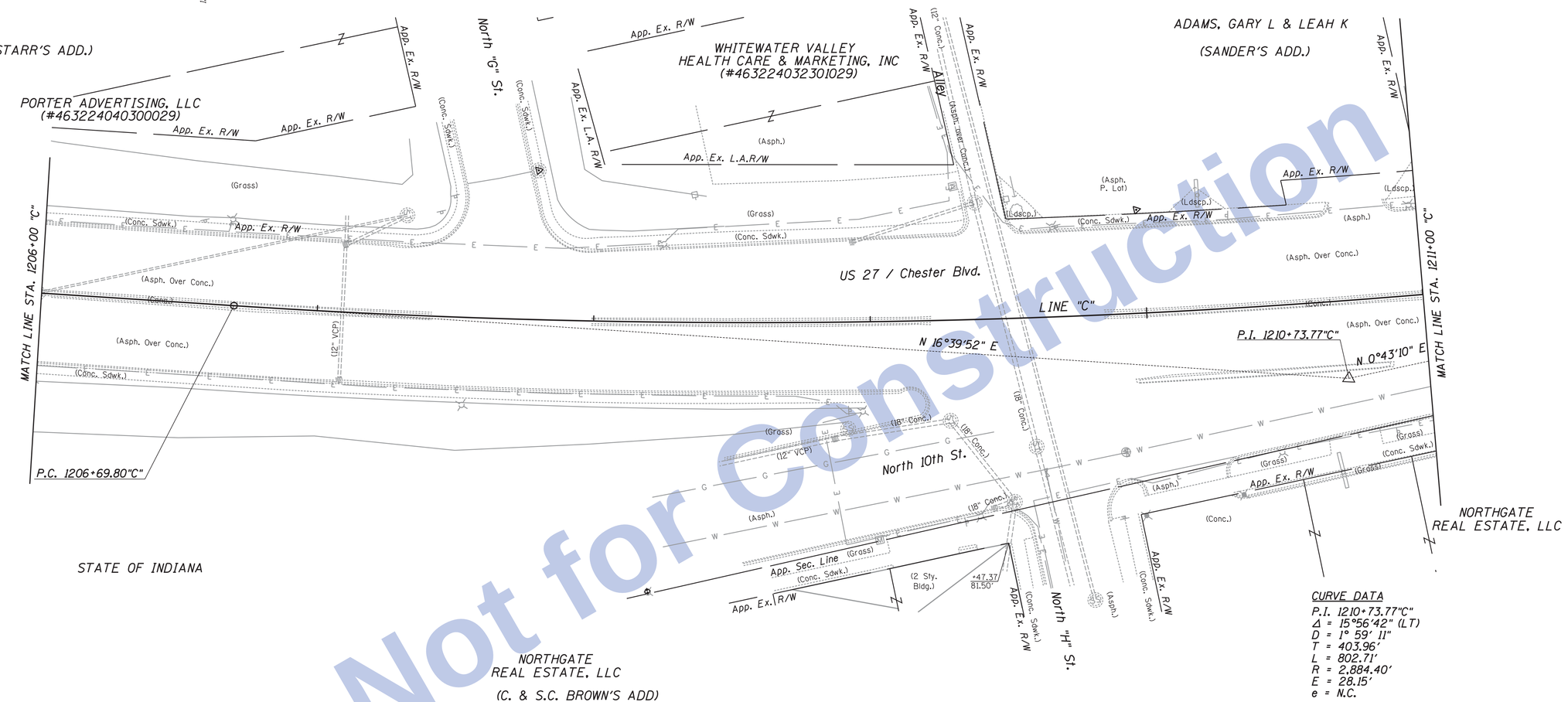

CURVE DATA
P.I. 1210+73.77"C"
Δ = 15°56'42" (LT)
D = 1° 59' 11"
T = 403.96'
L = 802.71'
R = 2,884.40'
E = 28.15'
e = N.C.

1207+09.19, 24.55'; Drop Inlet
•09.28, 23.88'; Cont. Sign (T.O. 1.00' VCP)
•53.32, 31.67'; Lt. Pole (0.50' DIA. ALUM.)
1208+20.78, 97.79'; F. Hyd.
•31.20, 49.27'; Cont. Sign (T.O. 1.50' CONC.)
•86.86, 42.20'; Drop Inlet
•87.66, 42.06'; Cont. Sign
(T.O. 1.00' VCP WITH A 1.20' x 1.20' STEEL CAP)
•91.54, 38.73'; Cont. Sign
(T.O. 1.00' VCP WITH A 1.20' x 1.20' STEEL CAP)
•91.57, 38.59'; Dr. MH.
•91.82, 31.97'; Sing. Post Sign (PEDESTRIAN CROSSING)
•91.96, 38.27'; Cont. Sign (T.O. 1.50' CONC.)
•92.35, 38.35'; Cont. Sign (T.O. 1.50' CONC.)
•92.48, 32.43'; Lt. Pole (0.50' DIA. ALUM.)
1209+02.24, 78.93'; Mbox. (0.30' x 0.30' WOOD POST)
•27.42, 36.44'; Cont. Sign (T.O. 1.50' CONC.)
•28.17, 36.38'; Dr. MH.
•28.62, 37.12'; Cont. Sign (T.O. 1.50' CONC.)
•32.61, 73.07'; Sing. Post Sign (STOP)
•37.95, 61.21'; Lt. Pole (0.50' DIA. ALUM.)
•42.36, 68.41'; Comm. Sign (Telephone)
•43.58, 68.32'; Cont. Sign (T.O. 1.20' CONC.)
•48.58, 47.93'; Cont. Sign (T.O. 1.00' CONC.)
•50.08, 65.81'; Cont. Sign (T.O. 1.50' CONC.)
•50.17, 66.05'; Cont. Sign (T.O. 1.20' CONC.)
•50.18, 66.33'; Dr. MH.
•50.94, 66.25'; Cont. Sign (T.O. 1.50' CONC.)
•51.24, 58.04'; Cont. Sign (T.O. 1.00' CONC.)
•57.70, 46.69'; Cont. Sign (T.O. 1.00' CONC.)
•58.20, 46.68'; Cont. Sign (T.O. 1.00' CONC.)
•58.26, 46.65'; Dr. MH.
•58.26, 49.73'; Cont. Sign (T.O. 1.00' CONC.)
•58.57, 46.64'; Dr. MH.
•61.18, 45.47'; Cont. Sign (T.O. 1.00' CONC.)
•61.26, 73.64'; Cont. Sign (T.O. 1.50' CONC.)
•61.81, 56.91'; Wat. S.O.
•66.28, 62.14'; Cont. Sign (T.O. 1.00' CONC.)
•88.65, 73.96'; Sing. Post Sign (STOP)
•90.22, 49.93'; Wat. Meter
•90.66, 50.35'; Wat. S.O.
•96.50, 73.25'; Pvt. Lamp Post
(0.20" x 0.20" STEEL POST)
1210+31.22, 67.54'; Pvt. Lamp Post
(0.20" x 0.20" STEEL POST)
•45.65, 53.07'; Lt. Pole (0.60' DIA. ALUM.)
•66.31, 54.63'; Comm. Sign
(NORTHGATE HOME OF PRETTY CARS)
•66.70, 61.83'; Post (0.60' STEEL)
•68.45, 67.54'; Comm. Sign
(NORTHGATE HOME OF PRETTY CARS)
•86.89, 48.76'; Sing. Post Sign (STOP)

ALL TOPOGRAPHY DESCRIBED
FROM LINE "C", EXCEPT AS SHOWN.

TBM #22: Cut "X" W Bolt F. Hyd. 150' S
N "H" St.
Sta. 1208+20.62"C", 97.44' Rt.
Adjusted El. = 955.441

Clark Dietz
ENGINEERS

RECOMMENDED FOR APPROVAL _____ DESIGN ENGINEER DATE

DESIGNED: JAL DRAWN: MP
CHECKED: RBI CHECKED: JAL

INDIANA
DEPARTMENT OF TRANSPORTATION

EXISTING TOPOGRAPHY
US 27

HORIZONTAL SCALE	BRIDGE FILE
1" = 20'	
VERTICAL SCALE	DESIGNATION
NONE	0100701
SURVEY BOOK	SHEETS
	83 of 278
CONTRACT	PROJECT
R-30397	0100701

12:10:25 PM 8/26/2016 P:\0170190\Plans\Existing\23_EX_US27_28.dgn

Not for Construction

1211+03.66, 37.86', Bush
+13.76, 40.98', Sing. Post Sign (STOP)
+49.03, 82.12', Wat. Meter
+64.37, 41.27', Comm. Sign (BUMBLEBEE QUICK PRINT)
+65.03, 35.05', Comm. Sign (BUMBLEBEE QUICK PRINT)
+65.29, 38.40', Post (0.40' X 0.40' STEEL WITH A 2.30 X 2.80' CONC. BAS)
+67.94, 32.29', Lt. Pole (0.60' ALUM.)
1212+64.85, 74.48', Comm. Sign (WITH LIGHTS)
+65.60, 73.39', Post (0.20' STEEL)
+66.79, 32.34', Lt. Pole (0.60' DIA. ALUM.)
+68.05, 65.98', Post (0.20' STEEL)
+68.45, 62.35', Post (0.20' STEEL)
+69.23, 37.83', Pvt. Lamp Post (0.35' DIA. STEEL)
+70.17, 59.45', Post (0.20' STEEL)
+71.62, 53.44', Post (0.20' STEEL)
+72.67, 50.81', Comm. Sign (WITH LIGHTS)
+72.82, 52.01', Pvt. Lamp Post (0.20' STEEL)
+75.82, 51.32', Comm. Sign
+75.81, 52.33', Post (0.20' DIA. STEEL)
+78.19, 59.59', Post (0.20' DIA. STEEL)
+80.06, 66.66', Post (0.20' DIA. STEEL)
+82.16, 73.61', Post (0.20' DIA. STEEL)
+89.00, 97.79', Comm. Sign (0.20' DIA. STEEL)
+89.48, 99.44', Comm. Sign
1213+16.84, 37.45', Pvt. Lamp Post (0.30 X 0.30 STEEL WITH 1.2 X 1.2' CON. BASE)
+50.71, 37.43', Pvt. Lamp Post (0.30' X 0.30' STEEL WITH 1.20' X 1.20' CON. BASE)
+56.32, 33.17', Sing. Post Sign (NO PARKING)
+74.64, 32.58', Pvt. Lamp Post (0.60' ALUM.)
+92.44, 37.85', Lt. Pole (0.30' X 0.30' STEEL WITH 1.2' X 1.2' CON. BASE)
1214+35.91, 38.02', Pvt. Lamp Post (0.30' X0.30' STEEL WITH 1.2' X 1.2' CON. BASE)
+37.56, 31.51', Cb. Inlet (T.O. 1.00' CONC.)
+37.81, 30.43', Cont. Sign (T.O. 1.00' CONC.)
+47.03, 43.68', Sing. Post Sign (STOP)
+96.25, 32.96', Lt. Pole (0.60' DIA. ALUM.)
1215+00
1215+40.23, 33.19', Sing. Post Sign (NO PARKING)
+60.24, 36.80', Guy Anchor
+61.76, 39.37', Post (2.00' X 2.00' CON. BASE)
+77.29, 37.17', Pole (PPDL)
+85.12, 33.01', Lt. Pole (0.50' ALUM.)

SEC. 32, T14N, R1W
WAYNE TWP.
WAYNE CO.

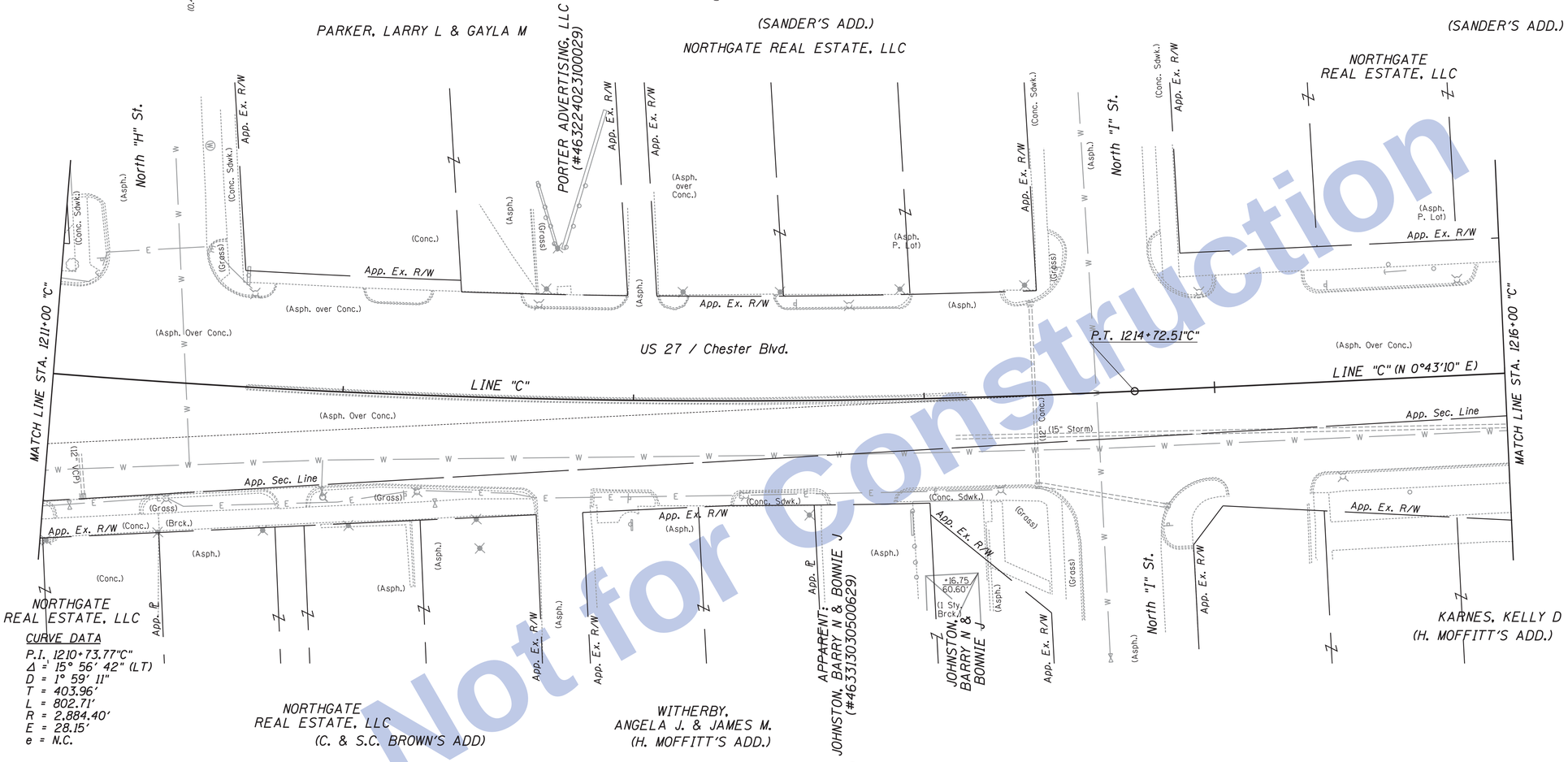

1211+02.21, 57.33', Pvt. Lamp Post (0.20' X 1.20' STEEL)
+09.19, 44.69', Wat. S.O.
+13.45, 41.39', Drop Inlet
+13.68, 40.95', Cont. Sign (T.O. 1.00' VCP)
+39.64, 51.83', 1/2" I.P. (IRON PIPE - 1/2)
+41.70, 40.03', Lt. Pole (0.50' ALUM.)
+84.34, 42.96', Cont. Sign (T.O. 1.00' CONCRETE)
+84.37, 42.92', Cont. Sign (T.O. 1.00' CONCRETE)
+84.39, 42.96', Cont. Sign (T.O. 1.00' PLASTIC)
+94.39, 34.50', Wat. S.O.
+94.55, 45.99', Ret. Wall (STONE)
+94.66, 36.51', F. Hyd.
+94.82, 36.44', F. Hyd.
+94.98, 47.10', Ret. Wall (STONE)
1212+03.89, 45.83', Pvt. Lamp Post (0.30' X 0.30' DIA. STEEL)
+22.22, 34.53', Sing. Post Sign (SPEED LIMIT 35)
+23.47, 44.85', Ret. Wall (STONE)
+24.83, 43.43', Ret. Wall (STONE)
+25.74, 66.09', Ret. Wall (STONE)
+26.60, 65.31', Post (0.20' DIA. ALUM.)
+26.83, 65.17', Ret. Wall (STONE)
+32.90, 36.93', Wat. S.O.
+47.14, 42.07', Pvt. Lamp Post (0.40' DIAM. STEEL)
+48.62, 51.96', Pvt. Lamp Post
+98.57, 33.65', Sing. Post Sign (JUNCTION IN. 12)
+99.45, 42.67', Post (0.50' DIA. STEEL)
1213+00.26, 41.13', Comm. Sign (JERRY LANE STATE FARM INS.)
+00.36, 44.86', Comm. Sign (JERRY LANE STATE FARM INS.)
+38.61, 32.57', Lt. Pole (0.50 ' DIAM. ALUM.)
+60.16, 39.41', Post (0.60' DIA. WOOD)
+94.61, 37.01', 1" I.P. (IRON PIPE - 1)
+95.18, 38.44', Post (0.30' DIAM. STEEL)
+95.34, 38.91', Comm. Sign (DAIRY QUEEN)
+95.39, 43.38', Comm. Sign (0.40" DIAM. STEEL WITH 2.00' X 2.00' CONC. BASE)
+95.57, 47.02', Comm. Sign (DAIRY QUEEN)
+95.61, 50.74', Post (0.30' DIAM. STEEL)
+95.61, 50.90', Post (0.30' DIAM. STEEL)
+96.04, 61.37', Post (0.30' DIAM. STEEL)
1214+20.11, 45.52', Fe. (METAL FRAME WITH PLASTIC PANELS)
+20.65, 73.83', Fe. (METAL FRAME WITH PLASTIC PANELS)
+21.01, 45.80', Metal Fe. (0.40' DIA. STEEL PIPE)
+21.75, 73.86', Metal Fe. (0.40' DIA. STEEL PIPE)
+25.35, 32.15', Lt. Pole (0.50' DIA. ALUM.)
+37.66, 30.97', Cont. Sign (T.O. 0.50' VCP)
+38.18, 31.06', Cb. Inlet
+38.23, 30.67', Cont. Sign (T.O. 1.00' CONC.)
+38.82, 31.37', Cont. Sign (T.O. 1.50' CONC.)
+55.38, 28.14', Cont. Sign (T.O. 1.50' CONC.)
+60.22, 91.32', Wat. S.O.
+81.80, 46.81', Sing. Post Sign (STOP)
1215+29.76, 62.06', Ret. Wall (CONC.)
+29.94, 44.55', Ret. Wall (CONC.)
+30.50, 44.64', Ret. Wall (CONC.)
+29.98, 41.57', Ret. Wall (CONC.)
+30.50, 61.84', Ret. Wall (CONC.)
+30.53, 41.59', Ret. Wall (CONC.)
+42.65, 32.74', Lt. Pole (0.50' DIA. ALUM.)
+65.39, 39.26', Post (0.50' DIA. STEEL)
+66.31, 41.82', Comm. Sign (KELLY'S KAWASAKI)
+66.35, 36.64', Comm. Sign (KELLY'S KAWASAKI)

SEC. 33, T14N, R1W
WAYNE TWP.
WAYNE CO.

ALL TOPOGRAPHY DESCRIBED
FROM LINE "C", EXCEPT AS SHOWN.

Not for Construction

12:10:26 PM 8/26/2016 P:\0170190\Plans\Existing\24_EX_US27_29.dgn

Clark Dietz
ENGINEERS

RECOMMENDED FOR APPROVAL _____ DESIGN ENGINEER DATE

DESIGNED: JAL | DRAWN: MP
CHECKED: RBI | CHECKED: JAL

INDIANA
DEPARTMENT OF TRANSPORTATION

EXISTING TOPOGRAPHY
US 27

HORIZONTAL SCALE	BRIDGE FILE
1" = 20'	
VERTICAL SCALE	DESIGNATION
NONE	0100701
SURVEY BOOK	SHEETS
	84 of 278
CONTRACT	PROJECT
R-30397	0100701

1216+25.92, 39.27'; Post (2.00' DIA. CON. BAS)
+32.68, 38.47'; Comb. Pwp.
+33.86, 39.00'; Conc. R/W Mkr.

+46.77, 36.94'; Tel. Mh.
+52.21, 42.93'; Guy Anchor
+52.71, 37.35'; Comb. Pwp.
+52.78, 59.27'; Tel. Pole
+53.15, 38.47'; Conc. R/W Mkr.

+75.30, 32.95'; Lt. Pole (0.50' DIA. ALUM.)
+78.91, 35.35'; Sing. Post Sign (S. 27 IN. 227)

SEC. 32, T14N, R1W
WAYNE TWP.
WAYNE CO.

1217+83.09, 35.16'; Comb. Pwp.
+85.30, 32.88'; Wat. S.O.
+85.35, 32.82'; Wat. S.O.
+86.27, 34.04'; F. Hyd.
+94.83, 32.46'; Lt. Pole (0.50' DIA. ALUM.)

1218+17.28, 40.97'; Elec. Trans. Box
+21.62, 40.69'; Elec. Trans. Box
+29.10, 35.31'; Traf. Sig. Mh.
+39.37, 42.45'; Traf. Sig. Strain Pole
+39.61, 34.91'; Traf. Sig. Strain Pole
(1.00' DIA. STEEL WITH A 3.00' X 3.00' CONC. BAS)
+39.63, 58.55'; Beam G.R.
+48.36, 54.29'; F. Hyd.
(ANTIQUE FIREMKLEP & PATIO)
+50.92, 38.68'; Post (Sign)
(0.527' S. IN. 227' END IN. 121)
+53.04, 58.88'; Beam G.R.
+53.77, 52.96'; F. Hyd.
(ANTIQUE PATIO)
+60.41, 62.45'; Post
+60.42, 76.66'; Post
(1.00' X 1.00' STEEL WITH A 2.50' DIA. CONC. BAS)
+61.27, 61.52'; Comm. Sign (LOBILL FOODS)
+61.50, 75.09'; Comm. Sign (LOBILL FOODS)
+69.55, 58.20'; Cb. Inlet
+70.41, 58.11'; Cont. Sign (T.O. 1.00' CONC.)
+70.84, 49.46'; Sig. Loop Det.
+70.95, 48.45'; Sig. Loop Det. Hsng.
+79.37, 38.21'; Wat. S.O.
+79.25, 30.29'; Drop Inlet
+82.59, 49.04'; Sig. Loop Det. Hsng.

1219+02.55, 53.86'; Wat. Meter
+06.80, 65.25'; Cont. Sign (T.O. 1.00' CONC.)
+07.52, 65.12'; Drop Inlet

+19.62, 33.83'; Traf. Sig. Strain Pole
(1.20' DIA. STEEL WITH A 2.50' CONC. BA)
+23.56, 34.28'; Sing. Post Sign (0.527' S. IN. 227' END IN. 121)
+25.37, 44.91'; Bush
+26.61, 35.60'; Traf. Sig. Mh.
+31.25, 46.86'; Bush
+37.60, 49.17'; Bush
+44.25, 50.26'; Bush
+48.38, 50.58'; Bush
+49.45, 49.39'; Post
(0.41' X 0.41' STEEL)
+49.88, 50.55'; Comm. Sign (POWERHOUSE RESTAURANT)
+50.30, 41.20'; Comm. Sign (POWERHOUSE RESTAURANT)
+85.51, 42.64'; Bush

1220+00

1220+20.86, 41.71'; Bush
+27.27, 41.00'; Post
(0.30' DIA. STEEL WITH A 3.00' X 2.00' CONC. BAS)

+69.49, 32.86'; Lt. Pole (0.50' DIA. ALUM.)
+74.33, 42.22'; Tel. Riser
(4.00' X 4.00' X 5.50' FIBERGLASS)
+76.62, 42.35'; Guy Anchor
+76.70, 47.97'; Guy Anchor
+76.72, 49.97'; Guy Anchor
+76.79, 51.24'; Guy Anchor
+77.13, 36.65'; Comb. Pwp.
+91.17, 36.87'; Guy Anchor
+95.27, 36.45'; Guy Anchor

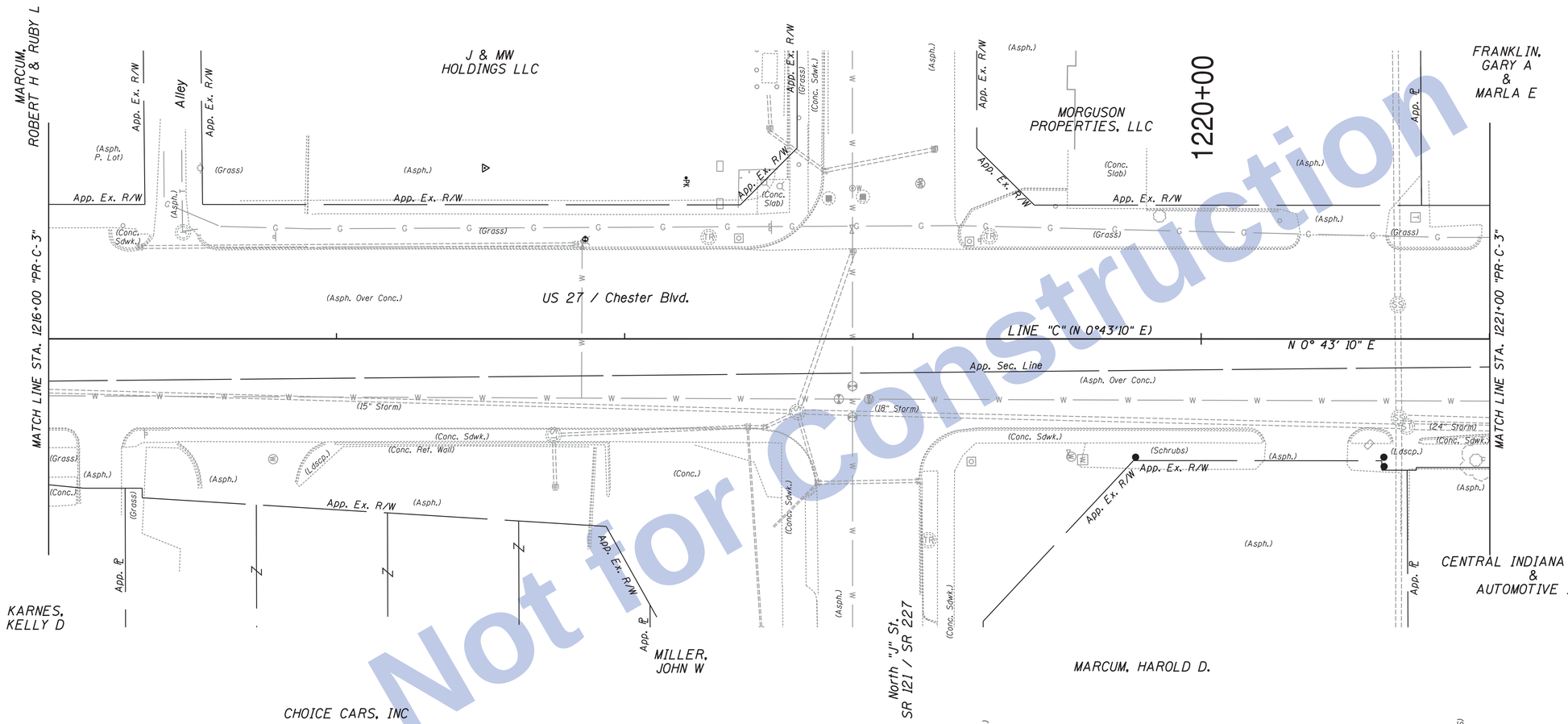

1216+32.60, 38.34'; Grnd. Light
+33.44, 32.90'; Sing. Post Sign (0.41' X 0.41' STEEL)
+34.95, 32.31'; Lt. Pole (0.50' DIA. ALUM.)

+78.05, 41.71'; Wat. Meter

+80.34, 47.42'; Bush
+90.62, 43.57'; Bush
+94.30, 41.58'; Bush
+96.43, 39.26'; Bush
+98.95, 35.91'; Bush
+99.55, 35.99'; Ret. Wall (CONC.)
+99.59, 36.67'; Ret. Wall (CONC.)

1217+41.99, 36.75'; Ret. Wall (CONC.)
+42.10, 36.04'; Ret. Wall (CONC.)

+75.16, 34.31'; Cont. Sign (T.O. 1.00' PLASTIC)
+75.32, 33.32'; Dr. Mh.
+75.97, 51.43'; Drop Inlet
+76.03, 50.38'; Cont. Sign (T.O. 1.00' PLASTIC)
+76.43, 33.89'; Cont. Sign (T.O. 1.00' PLASTIC)

+93.23, 36.75'; Ret. Wall (CONC.)
+94.42, 36.04'; Ret. Wall (CONC.)
+94.95, 35.99'; Ret. Wall (CONC.)
+94.69, 54.61'; Ret. Wall (CONC.)

1218+41.39, 30.16'; Cont. Sign (T.O. 1.00' PLASTIC)
+42.55, 30.64'; Cont. Sign (1.50' PLASTIC)
+42.64, 52.77'; Cb. Inlet
+43.54, 52.75'; Cont. Sign (1.50' PLASTIC)
+43.85, 30.21'; Cont. Sign (T.O. 1.00' PLASTIC)
+47.34, 30.40'; Cont. Sign (T.O. 1.00' PLASTIC)
+48.55, 30.67'; Cb. Inlet
+49.86, 30.38'; Cont. Sign (T.O. 1.00' PLASTIC)
+57.75, 65.31'; Cont. Sign (T.O. 0.50' VCP)
+59.00, 25.61'; Cont. Sign (T.O. 1.00' PLASTIC)
+59.92, 25.31'; Dr. Mh.
+60.35, 26.29'; Cont. Sign (T.O. 1.00' CONC.)
+60.70, 26.29'; Cont. Sign (1.50' CONC. 7424)
+66.23, 22.49'; Cont. Sign (1.50' CONC. 7424)
+66.96, 50.40'; Cont. Sign (T.O. 0.50' VCP)
+66.97, 49.86'; Cont. Sign (T.O. 1.00' CONC.)
+67.04, 49.61'; Cb. Inlet
+67.88, 49.82'; Cont. Sign (T.O. 1.00' CONC.)

1219+02.16, 49.28'; Cb. Inlet
+02.16, 48.61'; Cont. Sign (T.O. 1.00' CONC.)
+05.38, 69.77'; Traf. Sig. Mh.

+17.06, 46.84'; Pwp. w/ Lt.

+20.26, 42.53'; Traf. Sig. Strain Pole
(1.20' DIA. STEEL WITH A 2.00' X 2.00' CONC. BA)

+53.91, 39.91'; Wat. S.O.
+54.96, 40.85'; Wat. Meter
+58.88, 41.89'; Wat. Riser
(0.10' DIA. STEEL (OUTSIDE WATER FAUCET))

+82.32, 32.24'; Lt. Pole (0.50' ALUM.)

SEC. 33, T14N, R1W
WAYNE TWP.
WAYNE CO.

1220+58.15, 36.47'; Mbox. (0.20' X 0.20' STEEL)

+88.43, 46.87'; Pvt. Lamp Post
(0.30' X 0.30' STEEL WITH A 2.00' DIA. CONC. BAS)
+95.32, 42.05'; Bush
+97.93, 41.61'; Decid. Tr. (0.20' MAPLE)

ALL TOPOGRAPHY DESCRIBED
FROM LINE "C", EXCEPT AS SHOWN.

Not for Construction

Clark Dietz
ENGINEERS

RECOMMENDED FOR APPROVAL _____ DESIGN ENGINEER DATE

DESIGNED: JAL | DRAWN: MP
CHECKED: RBI | CHECKED: JAL

INDIANA
DEPARTMENT OF TRANSPORTATION

EXISTING TOPOGRAPHY
US 27

HORIZONTAL SCALE	BRIDGE FILE
1" = 20'	
VERTICAL SCALE	DESIGNATION
1" = 5'	0100701
SURVEY BOOK	SHEETS
	85 of 278
CONTRACT	PROJECT
R-30397	0100701

12:10:28 PM 8/26/2016 P:\0170190\Plans\Existing\25_EX_US27.dgn

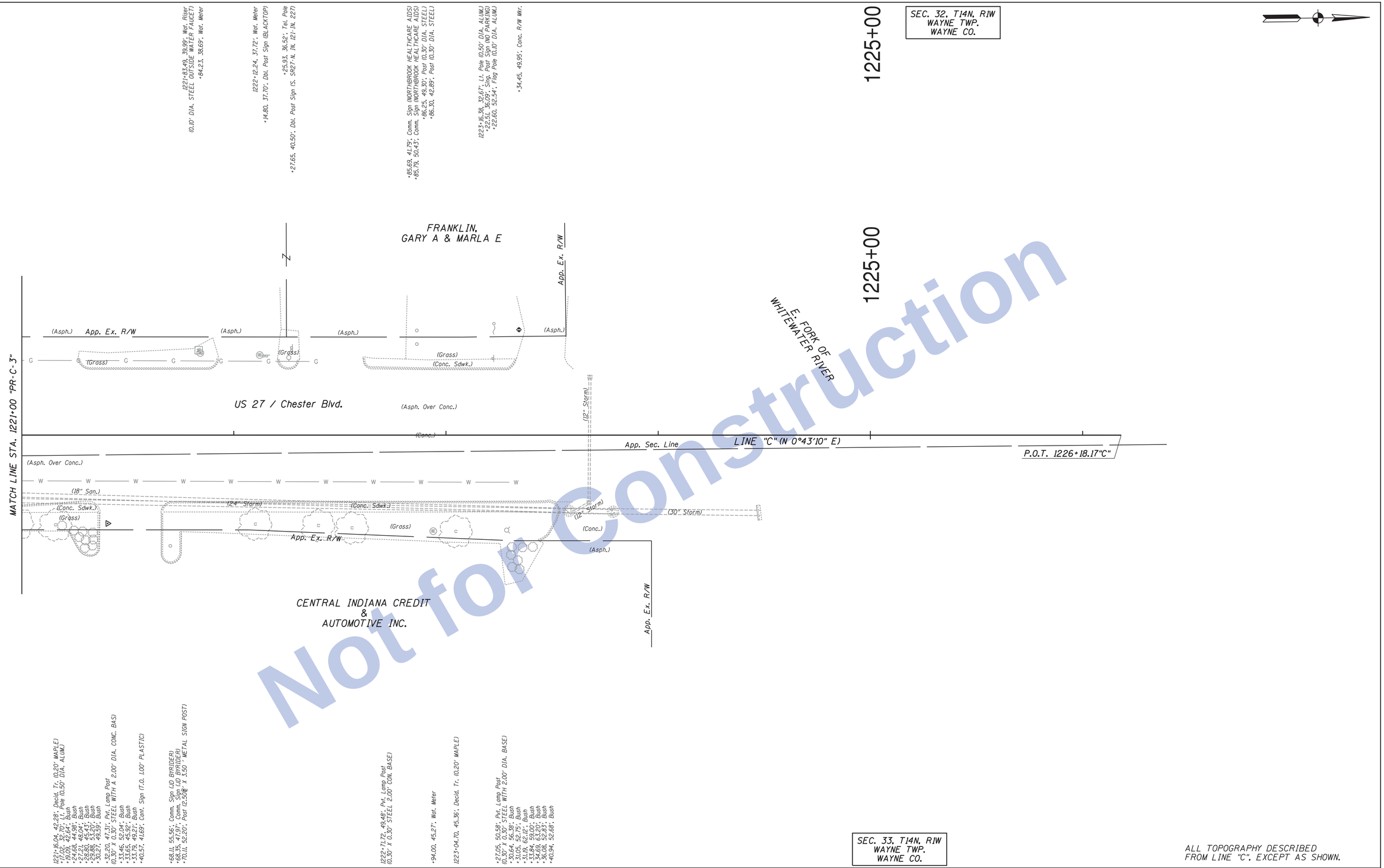

ALL TOPOGRAPHY DESCRIBED
FROM LINE "C", EXCEPT AS SHOWN.

Not for Construction

Clark Dietz
ENGINEERS

RECOMMENDED FOR APPROVAL	DESIGN ENGINEER	DATE	
DESIGNED: JAL	DRAWN: MP		
CHECKED: RBI	CHECKED: JAL		

INDIANA
DEPARTMENT OF TRANSPORTATION

EXISTING TOPOGRAPHY
US 27

HORIZONTAL SCALE	BRIDGE FILE
1" = 20'	
VERTICAL SCALE	DESIGNATION
1" = 5'	0100701
SURVEY BOOK	SHEETS
	86 of 278
CONTRACT	PROJECT
R-30397	0100701

12:10:30 PM8/26/2016 P:\0170190\Plans\Existing\26_EX_US27.dgn

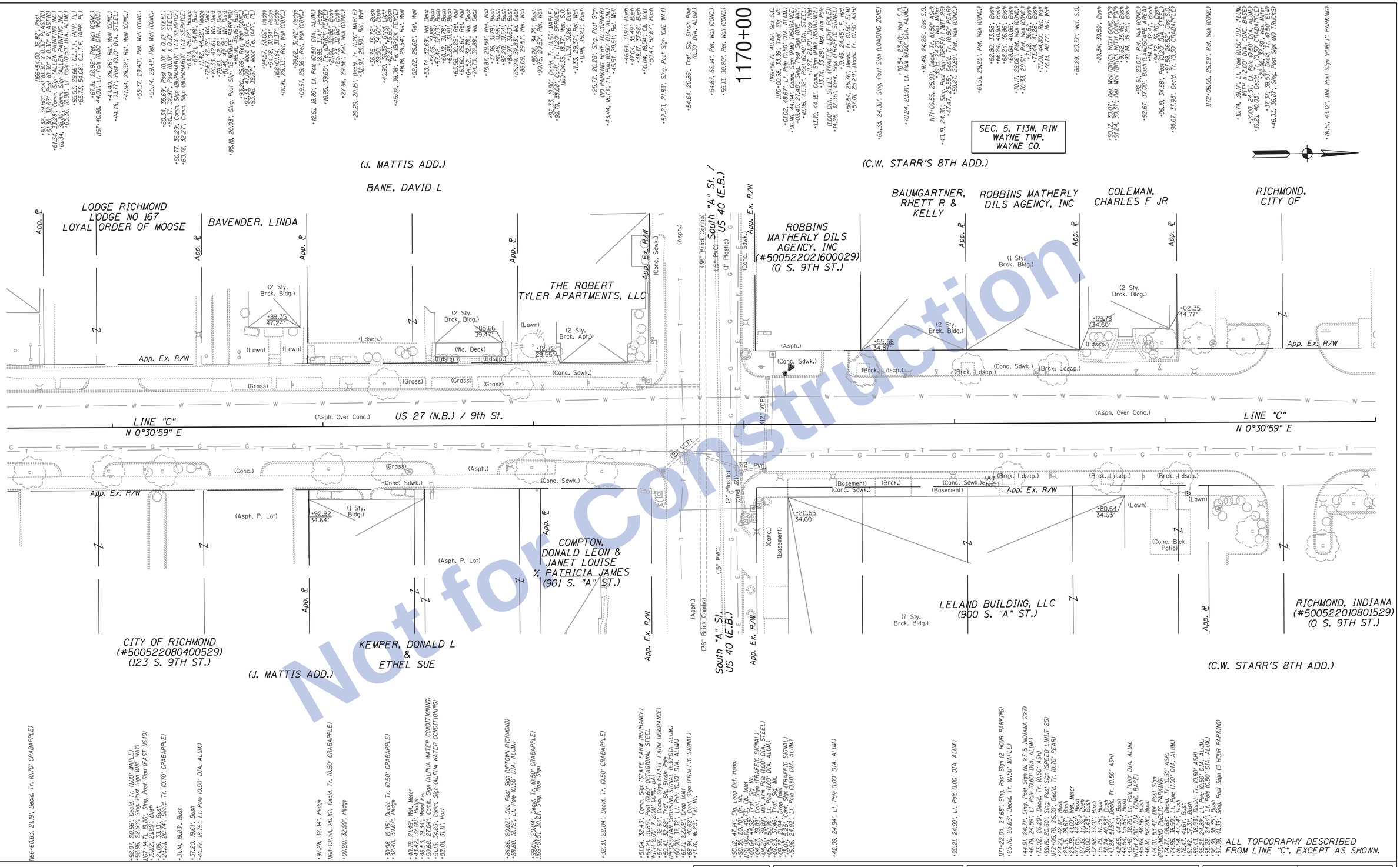

Not for Construction

Clark Dietz
ENGINEERS

RECOMMENDED FOR APPROVAL _____ DESIGN ENGINEER DATE

DESIGNED: JAL | DRAWN: MP
CHECKED: RBI | CHECKED: JAL

INDIANA
DEPARTMENT OF TRANSPORTATION

EXISTING TOPOGRAPHY
US 27 NORTHBOUND

HORIZONTAL SCALE	BRIDGE FILE
1" = 20'	
VERTICAL SCALE	DESIGNATION
NONE	0100701
SURVEY BOOK	SHEETS
	87 of 278
CONTRACT	PROJECT
R-30397	0100701

12:10:31 PM 8/26/2016 P:\0170190\Plans\Existing\27_EX_US27_20_21.dgn

SEC. 32. T14N. R1W
WAYNE TWP.
WAYNE CO.

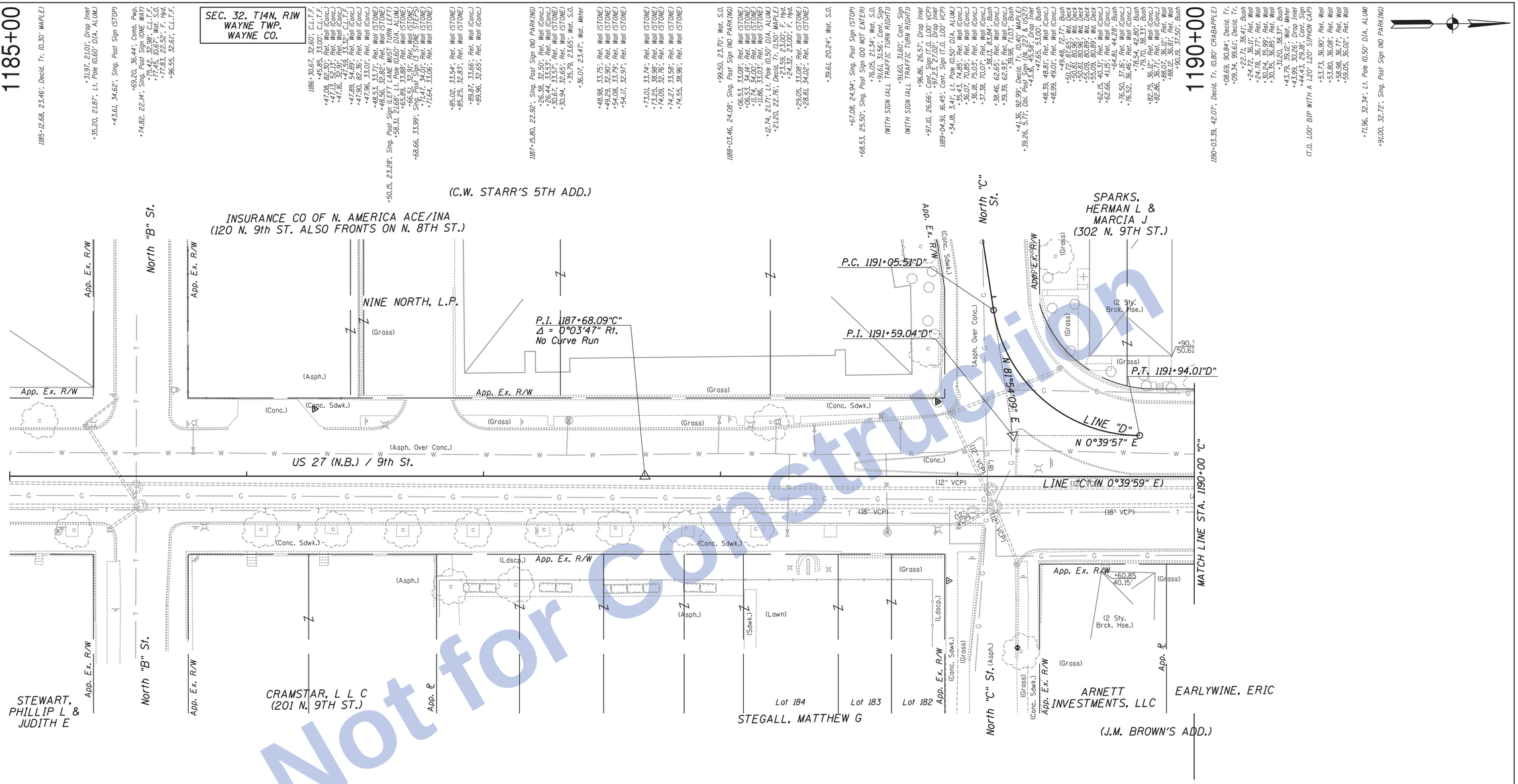

Not for Construction

1185+12.68, 23.46', Decid. Tr. (0.30' MAPLE)
+35.20, 21.87', Lt. Pole (0.60' DIA. ALUM.)
+31.97, 21.01', Drop Inlet
+43.61, 34.62', Sing. Post Sign (STOP)
+69.20, 36.44', Comb. Pwp.
+74.82, 22.14', Sing. Post Sign (ONE WAY)
+75.42, 32.98', C.L.T.F.
+76.42, 22.52', Wat. S.O.
+77.83, 22.52', F. Hyd.
+96.55, 32.61', C.L.T.F.
1186+30.67, 32.60', C.L.T.F.
+45.85, 33.00', C.L.T.F.
+47.08, 82.30', Ret. Wall (Conc.)
+47.16, 32.91', Ret. Wall (Conc.)
+47.18, 32.91', Ret. Wall (Conc.)
+47.85, 54.89', Ret. Wall (Conc.)
+47.90, 82.35', Ret. Wall (Conc.)
+47.96, 33.01', Ret. Wall (Conc.)
+48.53, 33.71', Ret. Wall (STONE)
+48.56, 32.82', Ret. Wall (STONE)
+50.15, 23.28', Sing. Post Sign (LEFT LANE MUST TURN LEFT)
+58.31, 21.68', Lt. Pole (0.60' DIA. ALUM.)
+65.89, 33.08', Ret. Wall (STONE)
+66.51, 32.91', Ret. Wall (STONE)
+68.66, 33.99', Sing. Post Sign (ONE WAY)
+70.79, 34.01', Ret. Wall (STONE)
+71.64, 33.06', Ret. Wall (STONE)
+85.02, 33.54', Ret. Wall (STONE)
+85.25, 32.83', Ret. Wall (STONE)
+89.87, 33.66', Ret. Wall (Conc.)
+89.96, 32.65', Ret. Wall (Conc.)
1187+15.80, 22.92', Sing. Post Sign (NO PARKING)
+26.38, 32.50', Ret. Wall (Conc.)
+26.44, 33.53', Ret. Wall (Conc.)
+30.61, 32.91', Ret. Wall (STONE)
+30.94, 32.85', Ret. Wall (STONE)
+35.79, 23.65', Wat. S.O.
+36.07, 23.47', Wat. Meter
+48.98, 33.75', Ret. Wall (STONE)
+49.29, 32.90', Ret. Wall (STONE)
+54.08, 33.79', Ret. Wall (STONE)
+54.17, 32.97', Ret. Wall (STONE)
+73.01, 33.74', Ret. Wall (STONE)
+73.25, 38.98', Ret. Wall (STONE)
+74.09, 32.76', Ret. Wall (STONE)
+74.27, 33.58', Ret. Wall (STONE)
+74.55, 38.96', Ret. Wall (STONE)
+99.50, 23.70', Wat. S.O.
1188+03.46, 24.08', Sing. Post Sign (NO PARKING)
+06.53, 33.04', Ret. Wall (STONE)
+06.53, 34.41', Ret. Wall (STONE)
+11.74, 34.00', Ret. Wall (STONE)
+11.86, 33.03', Ret. Wall (STONE)
+12.74, 21.71', Lt. Pole (0.50' DIA. ALUM.)
+21.20, 22.76', Decid. Tr. (0.30' CRABAPPLE)
+23.59, 23.00', F. Hyd.
+24.32, 23.00', F. Hyd.
+29.05, 33.08', Ret. Wall (STONE)
+28.81, 34.02', Ret. Wall (STONE)
+39.61, 20.24', Wat. S.O.
+67.08, 24.94', Sing. Post Sign (STOP)
+68.53, 25.50', Sing. Post Sign (DO NOT ENTER)
+76.05, 21.34', Wat. S.O.
+91.61, 31.56', Cont. Sign
(WITH SIGN (ALL TRAFFIC TURN RIGHT))
+91.60, 31.60', Cont. Sign
(WITH SIGN (ALL TRAFFIC TURN RIGHT))
+96.86, 26.57', Drop Inlet
+97.10, 26.66', Cont. Sign (T.O. 1.00' VCP)
+97.25, 32.72', Cont. Sign (T.O. 1.00' VCP)
1189+04.91, 16.45', Cont. Sign (T.O. 1.00' VCP)
+34.18, 3.41', Lt. Pole (0.50' DIA. ALUM.)
+35.43, 74.85', Ret. Wall (Conc.)
+36.07, 70.85', Ret. Wall (Conc.)
+36.18, 75.03', Ret. Wall (Conc.)
+37.38, 70.19', Ret. Wall (Conc.)
+37.73, 32.83', Ret. Wall (Conc.)
+38.46, 62.65', Ret. Wall (Conc.)
+39.39, 62.93', Ret. Wall (Conc.)
+39.98, 71.03', Bush
+41.36, 92.99', Decid. Tr. (0.30' CRABAPPLE)
+39.26, 5.71', Dbl. Post Sign (Tr. 1.27' & U-Post)
+43.16, 45.58', Drop Inlet
+47.65, 53.00', Bush
+48.31, 80.95', Ret. Wall (Conc.)
+48.39, 49.01', Ret. Wall (Conc.)
+48.99, 49.01', Ret. Wall (Conc.)
+49.48, 72.77', Bush
+50.72, 87.65', Wd. Deck
+50.81, 80.95', Wd. Deck
+55.09, 80.89', Wd. Deck
+56.03, 80.89', Wd. Deck
+62.15, 41.60', Ret. Wall (Conc.)
+62.66, 41.15', Ret. Wall (Conc.)
+64.81, 44.28', Bush
+76.50, 37.46', Ret. Wall (Conc.)
+76.52, 36.46', Ret. Wall (Conc.)
+78.54, 42.80', Bush
+79.70, 38.33', Bush
+82.75, 36.12', Ret. Wall (Conc.)
+82.86, 36.12', Ret. Wall (Conc.)
+88.01, 36.12', Ret. Wall
+88.12, 36.81', Ret. Wall
+90.19, 37.50', Bush
1190+03.39, 42.07', Decid. Tr. (0.80' CRABAPPLE)
+08.69, 90.84', Decid. Tr.
+09.34, 99.61', Decid. Tr.
+22.71, 38.41', Bush
+24.72, 36.11', Ret. Wall
+24.78, 36.77', Ret. Wall
+30.24, 35.99', Ret. Wall
+30.35, 36.85', Ret. Wall
+31.20, 38.37', Bush
+39.21, 30.26', Wd. Post
+43.39, 30.26', Drop Inlet
+44.43, 29.18', Cont. Sign
(T.O. 1.00' BIP WITH A 1.20' SIPHON CAP)
+53.73, 36.90', Ret. Wall
+53.80, 36.08', Ret. Wall
+58.98, 36.77', Ret. Wall
+59.05, 36.02', Ret. Wall
+71.96, 32.34', Lt. Pole (0.50' DIA. ALUM)
+91.00, 32.72', Sing. Post Sign (NO PARKING)

1185+10.53, 32.81', Ret. Wall (CONC.)
+14.54, 32.73', Ret. Wall (CONC.)
+19.25, 21.76', Wat. Meter
+22.43, 21.51', Sing. Post Sign (ONE WAY)
+27.18, 22.83', Decid. Tr. (1.00' MAPLE)
+35.85, 33.14', Ret. Wall (CONC.)
+42.08, 22.67', Cb. Inlet
+44.70, 46.03', Sing. Post Sign (NO PARKING)
+53.34, 4.59', Ret. Wall
+75.08, 34.07', Ret. Wall (CONC.)
+76.24, 33.88', Ret. Wall (CONC.)
+76.34, 32.68', Ret. Wall (CONC.)
+78.40, 34.71', Dbl. Post Sign
(ACE INSURANCE PARKING)
+78.53, 21.13', Sing. Post Sign (ONE WAY)
+78.59, 21.13', Lt. Pole (0.60' DIA. ALUM.)
+98.89, 32.78', Ret. Wall (CONC.)
1186+04.84, 32.82', Ret. Wall (Conc.)
+04.91, 33.58', Ret. Wall (Conc.)
+06.20, 22.47', Decid. Tr. (0.30' CRABAPPLE)
+21.75, 21.24', Sing. Post Sign (NO PARKING)
+29.76, 33.70', Ret. Wall (Conc.)
+30.16, 32.85', Ret. Wall (Conc.)
+35.69, 33.03', Ret. Wall (Conc.)
+35.82, 32.91', Ret. Wall (Conc.)
+36.56, 22.43', Decid. Tr. (1.00' LOCUST)
+66.07, 22.63', Decid. Tr. (0.40' CRABAPPLE)
+78.97, 35.65', Ret. Wall (Conc.)
+79.01, 35.65', Ret. Wall (Conc.)
+79.64, 32.97', Ret. Wall (Conc.)
+80.94, 34.91', Fe.
+81.49, 33.98', Fe.
+86.23, 46.66', Decid. Tr. (1.00' REDBUD)
+90.59, 47.11', Hedge
+95.63, 22.68', Decid. Tr. (0.50' LOCUST)
1187+04.25, 43.97', Fe.
+05.14, 47.31', Hedge
+13.68, 45.90', Decid. Tr. (1.20' REDBUD)
+22.05, 23.09', Sing. Post Sign (2 WAY TRAFFIC AHEAD)
+22.42, 46.96', Hedge
+25.41, 22.25', Decid. Tr. (0.30' CRABAPPLE)
+36.47, 21.61', Lt. Pole (0.50' DIA. ALUM.)
+37.26, 47.25', Hedge
+50.46, 47.77', Hedge
+55.72, 21.79', Decid. Tr. (0.50' CRABAPPLE)
+74.17, 47.31', Hedge
+75.94, 21.32', Sing. Post Sign (NO PARKING)
+83.24, 47.00', Hedge
+85.40, 22.04', Decid. Tr. (0.30' CRABAPPLE)
+98.14, 47.31', Hedge
1189+14.88, 22.26', Decid. Tr. (0.50' CRABAPPLE)
+28.27, 23.95', Wat. S.O.
+29.23, 38.37', Grnd. Light
+32.29, 40.83', Ret. Wall (STONE)
+32.96, 35.61', Ret. Wall (STONE)
+33.70, 41.86', Ret. Wall (STONE)
+33.80, 35.69', Ret. Wall (STONE)
+35.56, 36.83', Ret. Wall (STONE)
(STEGALL BEHREIDE ORR FUNERAL CHAPEL)
+36.66, 41.59', Comm. Sign
(STEGALL BEHREIDE ORR FUNERAL CHAPEL)
+36.93, 32.77', Ret. Wall (STONE)
+37.58, 42.95', Ret. Wall (STONE)
+40.08, 36.10', Ret. Wall (STONE)
+41.50, 40.85', Ret. Wall (STONE)
+45.65, 39.30', Grnd. Light
+51.08, 34.49', Ret. Wall (Conc.)
+51.63, 34.77', Ret. Wall (Conc.)
+70.40, 22.99', Wat. S.O.
+70.48, 23.68', Wat. Meter
+70.53, 24.14', Wat. Meter
+70.56, 22.78', Wat. S.O.
+88.22, 23.83', F. Hyd.
+89.66, 43.65', Fe. (ALPS PL)
+90.60, 23.47', Sing. Post Sign (NO PARKING)
+91.70, 22.43', Lt. Pole (0.50' DIA. ALUM.)
+93.60, 34.48', Ret. Wall (Conc.)
+93.62, 33.64', Ret. Wall (Conc.)
1189+62.53, 21.33', Cont. Sign (T.O. 0.60' PLASTIC)
+00.41, 21.33', Cb. Inlet
+00.89, 21.22', Cont. Sign (T.O. 0.60' PLASTIC)
+02.48, 21.33', Cb. Inlet
+02.62, 4.84', Cont. Sign (T.O. 1.00' VCP)
+06.27, 34.82', Sing. Post Sign (DO NOT ENTER)
+06.41, 15.20', Tel. Mh.
+13.05, 5.03', Cont. Sign (T.O. 1.00' VCP)
+13.14, 4.97', Cont. Sign
+14.74, 4.59', Cont. Sign (T.O. 1.00' VCP)
+15.94, 12.67', Dr. Mh.
+24.90, 37.24', Drop Inlet
+25.31, 37.22', Drop Inlet
+25.37, 37.22', Drop Inlet
+27.01, 73.87', Decid. Tr. (4.00' SYCAMORE)
+27.03, 42.72', Sing. Post Sign (STOP)
+27.10, 42.72', Cont. Sign (T.O. 1.00' VCP)
+34.96, 61.93', Ret. Wall (Conc.)
+35.02, 36.21', Ret. Wall (Conc.)
+35.69, 37.37', Ret. Wall (Conc.)
+35.89, 37.37', Ret. Wall (Conc.)
+39.68, 35.99', Ret. Wall (Conc.)
+39.96, 36.81', Ret. Wall (Conc.)
+65.15, 36.44', Ret. Wall (Conc.)
+65.41, 36.77', Ret. Wall (Conc.)
1190+06.73, 36.79', Ret. Wall (Conc.)
+06.87, 36.19', Ret. Wall (Conc.)
+12.50, 36.02', Ret. Wall (Conc.)
+12.55, 36.67', Ret. Wall (Conc.)
+38.49, 30.21', Drop Inlet
+39.06, 29.78', Cont. Sign
(T.O. 1.00' BIP WITH A 1.20' SIPHON CAP)
+39.55, 12.00', Cont. Sign (T.O. 1.50' VCP)
+40.15, 10.88', Cont. Sign
(T.O. 1.00' BIP WITH A 1.20' SIPHON CAP)
+40.15, 11.99', San. Mh.
+40.22, 12.63', Cont. Sign
(T.O. 1.00' BIP WITH A 1.20' SIPHON CAP)
+41.06, 12.04', Cont. Sign (T.O. 1.50' VCP)
+50.20, 32.89', Sing. Post Sign (SPEED LIMIT 35)
+60.12, 36.14', Ret. Wall (Conc.)
+60.22, 35.89', Ret. Wall (Conc.)
+65.97, 36.03', Ret. Wall (Conc.)
+66.33, 36.69', Ret. Wall (Conc.)
+66.94, 37.79', Wood Fe.
+78.58, 43.14', Bush
+80.65, 37.73', Wood Fe.
+80.69, 41.55', Wood Fe.
+80.83, 36.07', Ret. Wall (Conc.)
+80.96, 36.07', Ret. Wall (Conc.)
+85.78, 36.12', Ret. Wall (Conc.)
+95.69, 36.73', Ret. Wall (Conc.)
+95.82, 41.50', Wood Fe.
+95.97, 41.50', Wood Fe.
+95.17, 44.41', Conf. Tr. (0.30' SPRUCE)
+98.61, 37.90', Wood Fe.
+98.68, 41.50', Wood Fe.
+98.91, 36.66', Ret. Wall (CONC.)
+98.93, 36.05', Ret. Wall (CONC.)

ALL TOPOGRAPHY DESCRIBED
FROM LINE "C", EXCEPT AS SHOWN.

TBM #20: Bt. Spk. Set S Side
of 48" Sycamore ⊙ N "C" St.
Sta. 1189+25.41"C", 72.27' Rt.
Adjusted El. = 977.599

Clark Dietz
ENGINEERS

RECOMMENDED FOR APPROVAL _____ DESIGN ENGINEER DATE

DESIGNED: JAL DRAWN: MP
CHECKED: RBI CHECKED: JAL

INDIANA
DEPARTMENT OF TRANSPORTATION

EXISTING TOPOGRAPHY
US 27

HORIZONTAL SCALE	BRIDGE FILE
1" = 20'	
VERTICAL SCALE	DESIGNATION
NONE	0100701
SURVEY BOOK	SHEETS
	88 of 278
CONTRACT	PROJECT
R-30397	0100701

12:10:33 PM 8/26/2016 P:\0170190\Plans\Existing\28_EX_US27_23_24.dgn

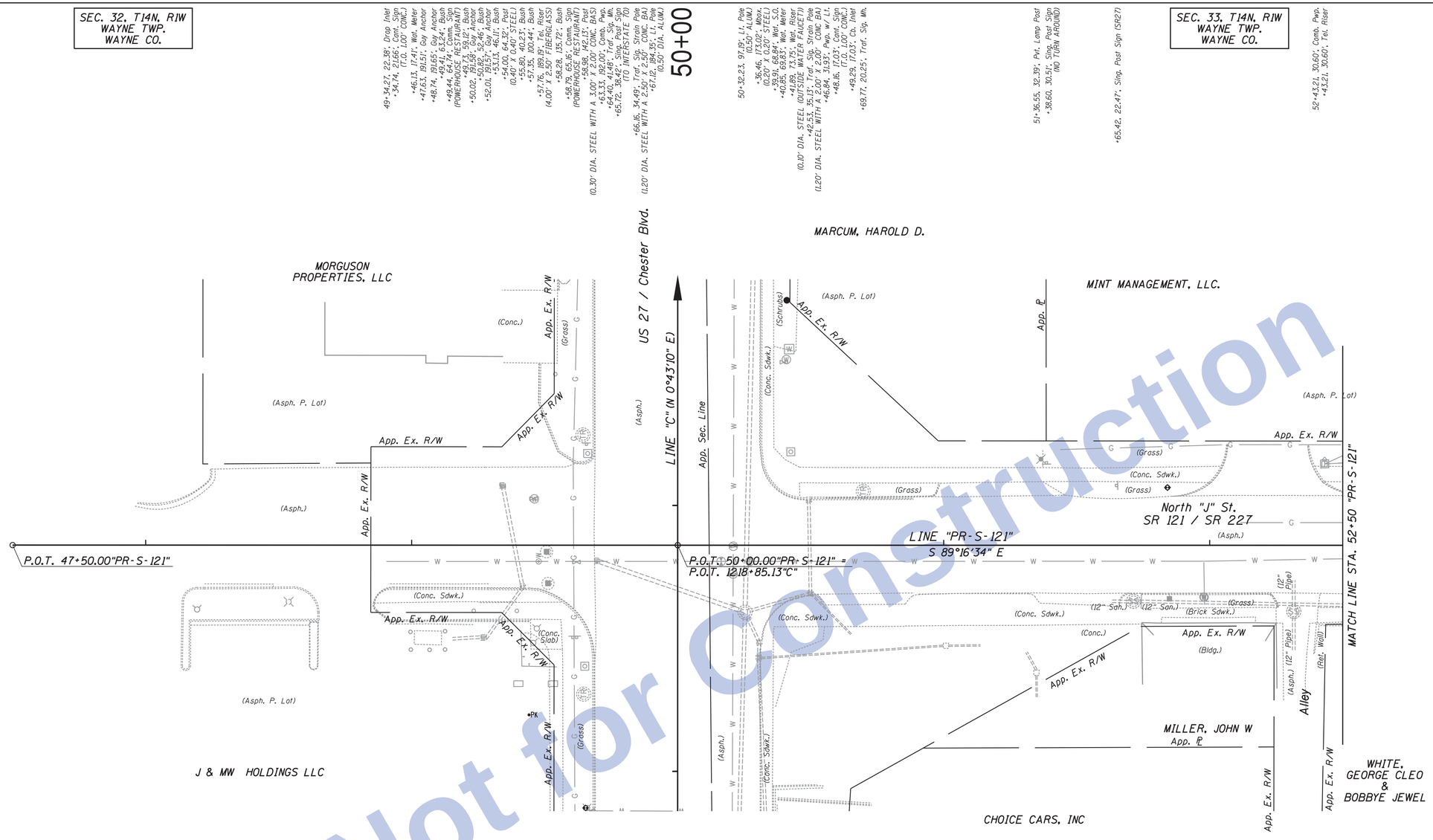

Not for Construction

ALL TOPOGRAPHY DESCRIBED FROM LINE "PR-S-121", EXCEPT AS SHOWN.

Clark Dietz ENGINEERS

RECOMMENDED FOR APPROVAL _____ DESIGN ENGINEER DATE

DESIGNED: JAL | DRAWN: MP
CHECKED: RBI | CHECKED: JAL

INDIANA DEPARTMENT OF TRANSPORTATION

EXISTING TOPOGRAPHY
US 27

HORIZONTAL SCALE	BRIDGE FILE
1" = 20'	
VERTICAL SCALE	DESIGNATION
1" = 5'	0100701
SURVEY BOOK	SHEETS
	89 of 278
CONTRACT	PROJECT
R-30397	0100701

12:10:35 PM 8/26/2016 P:\0170190\Plans\Existing\29_EX_SR121.dgn

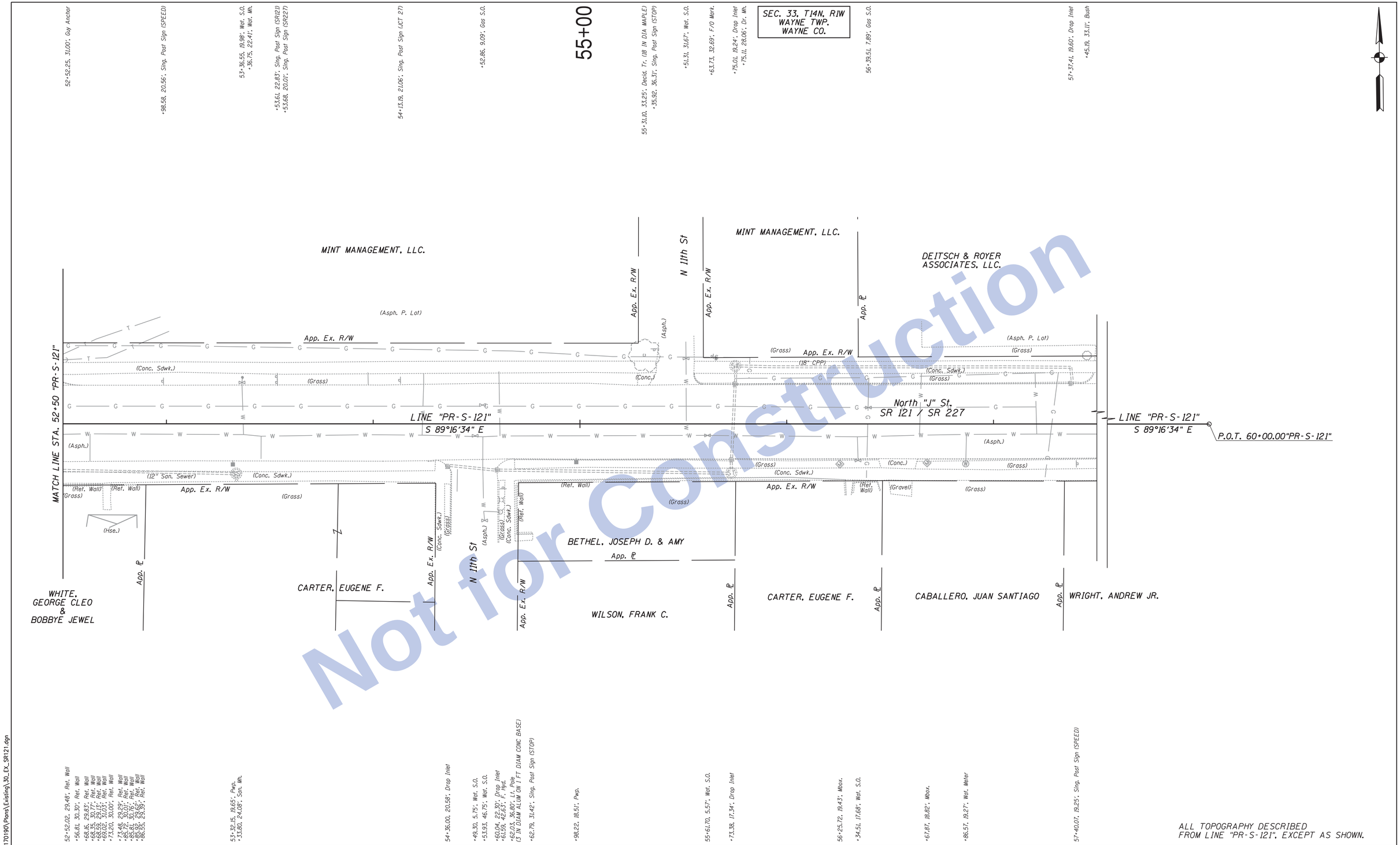

ALL TOPOGRAPHY DESCRIBED FROM LINE "PR-S-121", EXCEPT AS SHOWN.

Not for Construction

Clark Dietz ENGINEERS

RECOMMENDED FOR APPROVAL	DESIGN ENGINEER	DATE	
DESIGNED: JAL	DRAWN: MP		
CHECKED: RBI	CHECKED: JAL		

INDIANA
DEPARTMENT OF TRANSPORTATION

EXISTING TOPOGRAPHY
US 27

HORIZONTAL SCALE	1" = 20'
VERTICAL SCALE	1" = 5'
BRIDGE FILE	
DESIGNATION	0100701
SURVEY BOOK	
SHEETS	90 of 278
CONTRACT	R-30397
PROJECT	0100701

12:10:37 PM8/26/2016 P:\0170190\Plans\Existing\30_EX_SR121.dgn

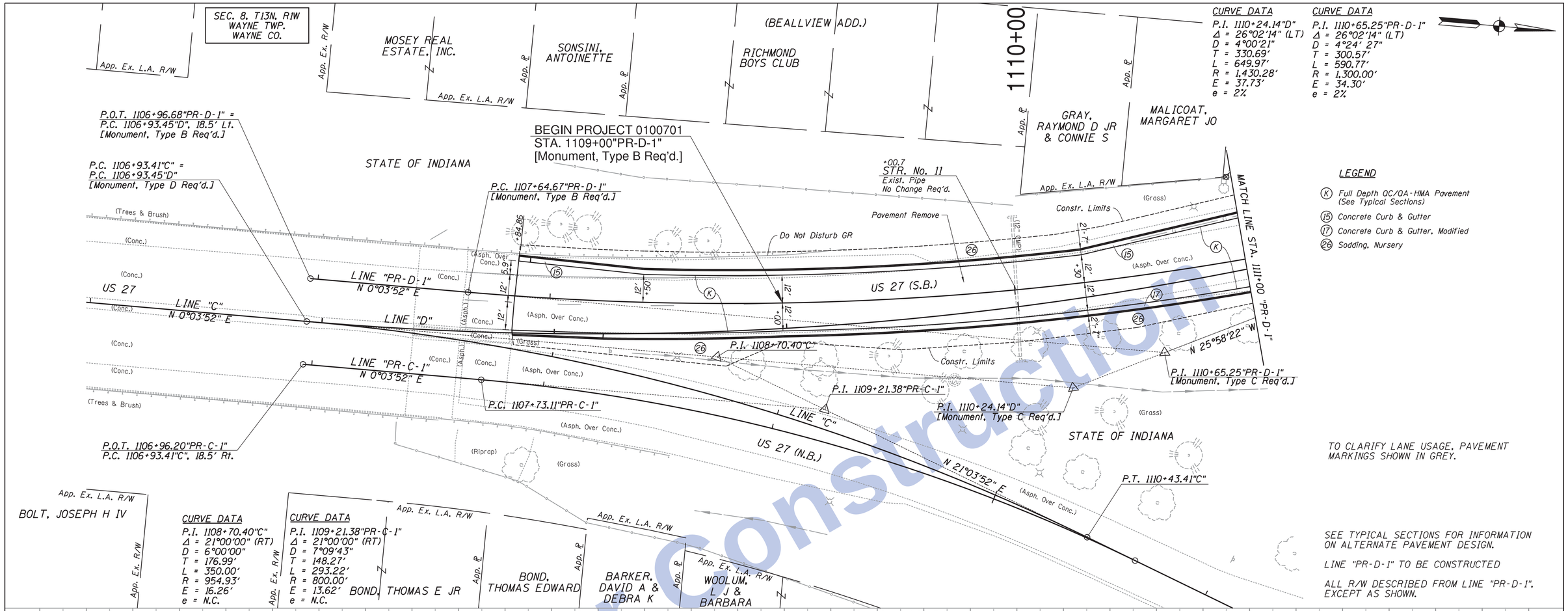

CURVE DATA

P.I. 1110+24.14"D"
Δ = 26°02'14" (LT)
D = 4°00'21"
T = 330.69'
L = 649.97'
R = 1,430.28'
E = 37.73'
e = 2%

CURVE DATA

P.I. 1110+65.25"PR-D-1"
Δ = 26°02'14" (LT)
D = 4°24' 27"
T = 300.57'
L = 590.77'
R = 1,300.00'
E = 34.30'
e = 2%

LEGEND

- (K) Full Depth QC/QA-HMA Pavement (See Typical Sections)
- (15) Concrete Curb & Gutter
- (17) Concrete Curb & Gutter, Modified
- (26) Sodding, Nursery

TO CLARIFY LANE USAGE, PAVEMENT MARKINGS SHOWN IN GREY.

SEE TYPICAL SECTIONS FOR INFORMATION ON ALTERNATE PAVEMENT DESIGN.

LINE "PR-D-1" TO BE CONSTRUCTED

ALL R/W DESCRIBED FROM LINE "PR-D-1", EXCEPT AS SHOWN.

CURVE DATA

P.I. 1108+70.40"C"
Δ = 21°00'00" (RT)
D = 6°00'00"
T = 176.99'
L = 350.00'
R = 954.93'
E = 16.26'
e = N.C.

CURVE DATA

P.I. 1109+21.38"PR-C-1"
Δ = 21°00'00" (RT)
D = 7°09'43"
T = 148.27'
L = 293.22'
R = 800.00'
E = 13.62'
e = N.C.

Earthwork Balance (HMA Option)

Fill + 25%**	2,340	cys
Common Excavation**	32,185	cys
Waste	29,845	cys
Borrow*	1,000	cys
Pavement Removal	56,850	sys
Rock Excavation	700	cys
Unclassified Excavation	500	cys

*Apply 1,000 cys undistributed quantity for Borrow.
**Includes 1,102 cys for benching.

Earthwork Balance (PCCP Option)

Fill + 25%**	500	cys
Common Excavation**	40,060	cys
Waste	39,560	cys
Borrow*	1,000	cys
Pavement Removal	56,850	sys
Rock Excavation	700	cys
Unclassified Excavation	500	cys

*Apply 1,000 cys undistributed quantity for Borrow.
**Includes 1,102 cys for benching.

Not for Construction

SEE SHEETS 11 & 12 FOR REFERENCE POINTS

Clark Dietz ENGINEERS

RECOMMENDED FOR APPROVAL _____ DESIGN ENGINEER DATE

DESIGNED: JAL DRAWN: MP
CHECKED: RBI CHECKED: JAL

INDIANA DEPARTMENT OF TRANSPORTATION

PLAN & PROFILE
US 27 SOUTHBOUND

HORIZONTAL SCALE	BRIDGE FILE
1" = 20'	
VERTICAL SCALE	DESIGNATION
1" = 5'	0100701
SURVEY BOOK	SHEETS
	91 of 278
CONTRACT	PROJECT
R-30397	0100701

12:10:39 PM 8/26/2016 P:\0170190\Plans\PlanProf\01_PP_US27_SB_100.dgn

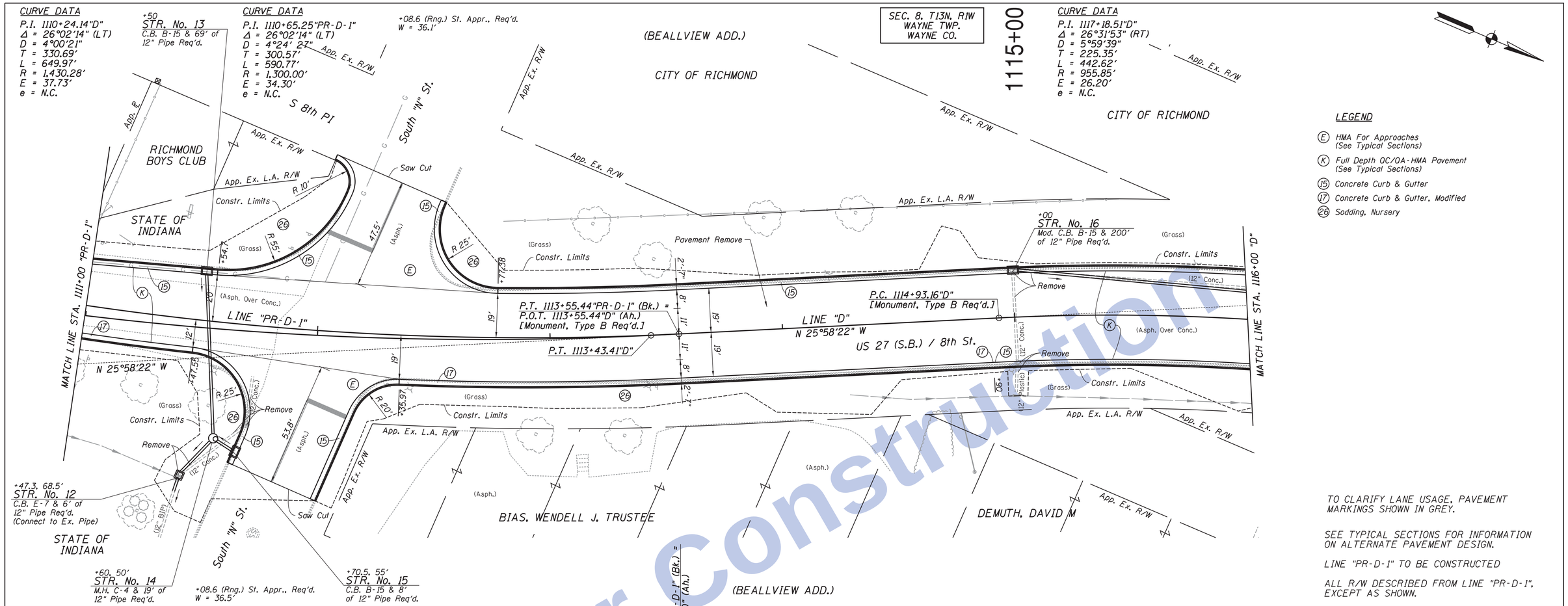

Not for Construction

SEE SHEETS 11 & 12 FOR REFERENCE POINTS

Clark Dietz ENGINEERS

RECOMMENDED FOR APPROVAL _____ DESIGN ENGINEER DATE

DESIGNED: JAL DRAWN: MP
CHECKED: RBI CHECKED: JAL

INDIANA DEPARTMENT OF TRANSPORTATION

PLAN & PROFILE
US 27 SOUTHBOUND

HORIZONTAL SCALE	BRIDGE FILE
1" = 20'	
VERTICAL SCALE	DESIGNATION
1" = 5'	0100701
SURVEY BOOK	SHEETS
	92 of 278
CONTRACT	PROJECT
R-30397	0100701

12:10:41 PM 8/26/2016 P:\0170190\Plans\PlanProf\02_PP_US27_SB_101.dgn

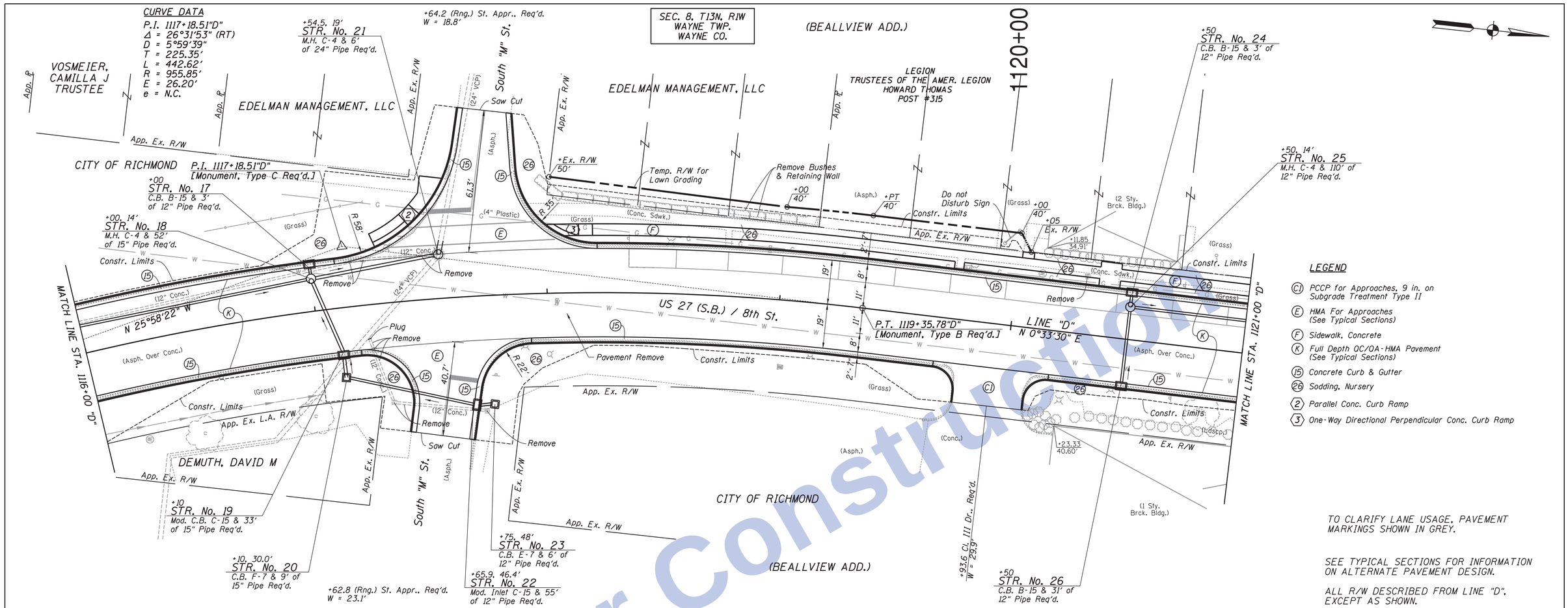

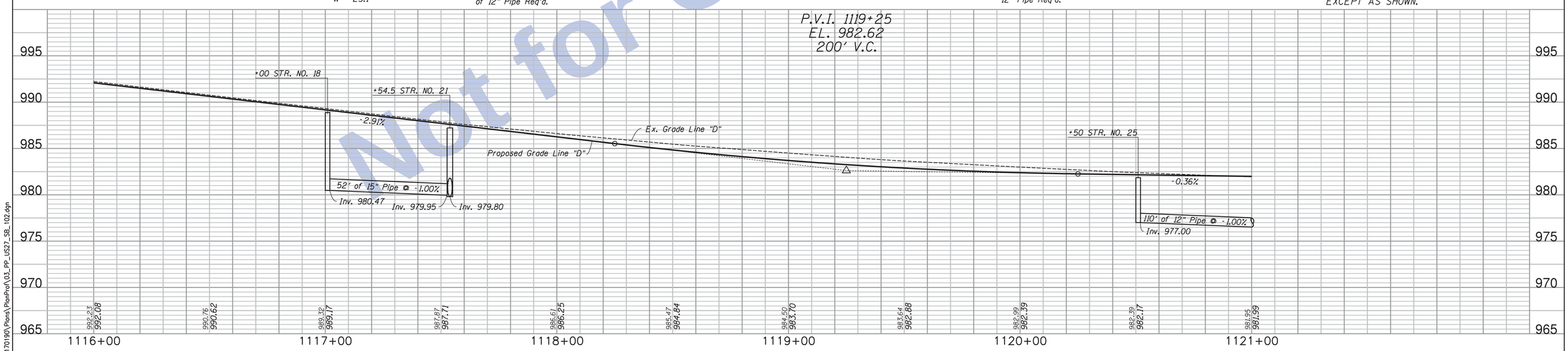

SEE SHEETS 11 & 12 FOR REFERENCE POINTS

Clark Dietz ENGINEERS

RECOMMENDED FOR APPROVAL _____ DESIGN ENGINEER DATE

DESIGNED: JAL | DRAWN: MP
CHECKED: RBI | CHECKED: JAL

INDIANA DEPARTMENT OF TRANSPORTATION

PLAN & PROFILE
US 27 SOUTHBOUND

HORIZONTAL SCALE	BRIDGE FILE
1" = 20'	
VERTICAL SCALE	DESIGNATION
1" = 5'	0100701
SURVEY BOOK	SHEETS
	93 of 278
CONTRACT	PROJECT
R-30397	0100701

Not for Construction

12:10:42 PM 8/26/2016 P:\0170190\Plans\PlanProf\03_PP_US27_SB_102.dgn

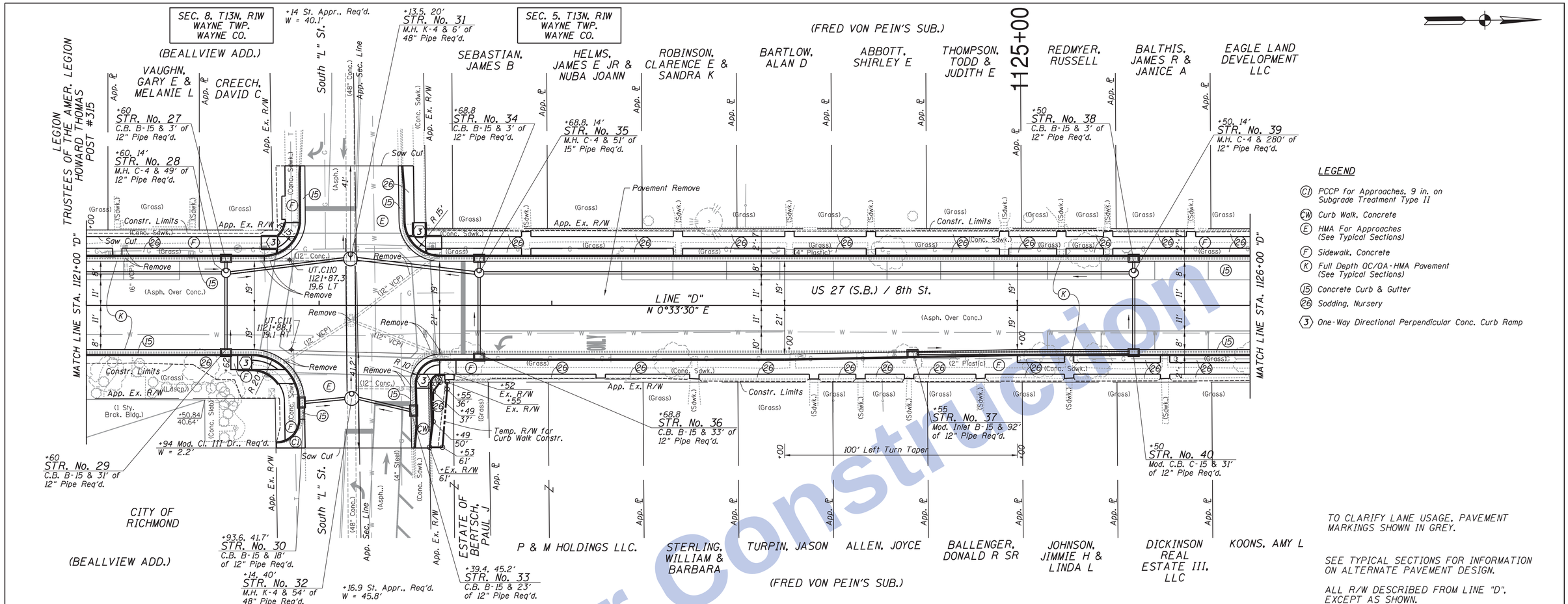

LEGEND

- (CI) PCCP for Approaches, 9 in. on Subgrade Treatment Type II
- (CW) Curb Walk, Concrete
- (E) HMA For Approaches (See Typical Sections)
- (F) Sidewalk, Concrete
- (K) Full Depth QC/QA-HMA Pavement (See Typical Sections)
- (15) Concrete Curb & Gutter
- (26) Sodding, Nursery
- (3) One-Way Directional Perpendicular Conc. Curb Ramp

TO CLARIFY LANE USAGE, PAVEMENT MARKINGS SHOWN IN GREY.

SEE TYPICAL SECTIONS FOR INFORMATION ON ALTERNATE PAVEMENT DESIGN.

ALL R/W DESCRIBED FROM LINE "D", EXCEPT AS SHOWN.

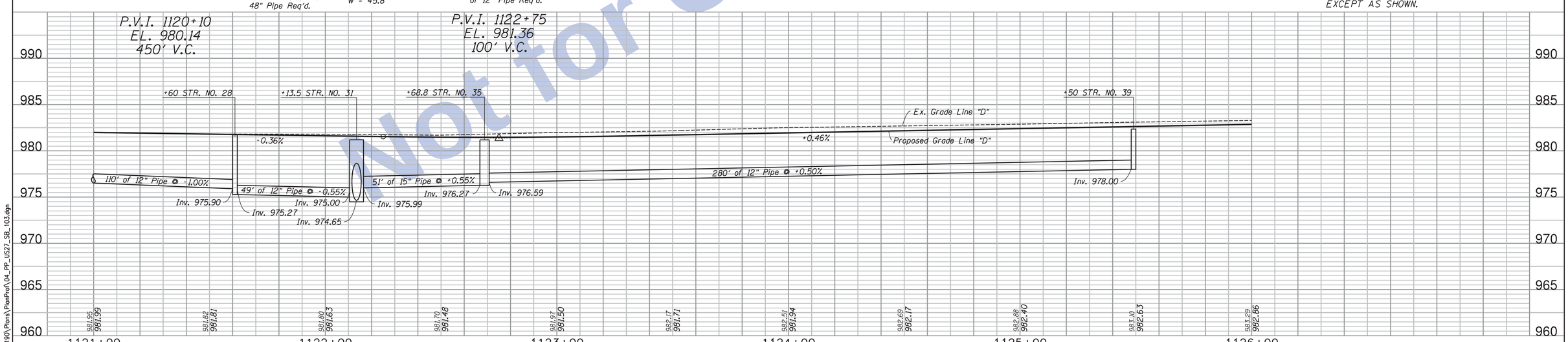

SEE SHEETS 11 & 12 FOR REFERENCE POINTS

TBM #31: Cut "X" in W Bolt F. Hyd. @ NE Cor. S "L" St. & S 8th St. Sta. 1122+49.7"D", 23.2' Rt. Adjusted El. = 983.2890

Clark Dietz ENGINEERS

RECOMMENDED FOR APPROVAL _____ DESIGN ENGINEER DATE

DESIGNED: JAL DRAWN: MP
CHECKED: RBI CHECKED: JAL

INDIANA DEPARTMENT OF TRANSPORTATION

PLAN & PROFILE
US 27 SOUTHBOUND

HORIZONTAL SCALE	BRIDGE FILE
1" = 20'	
VERTICAL SCALE	DESIGNATION
1" = 5'	0100701
SURVEY BOOK	SHEETS
	94 of 278
CONTRACT	PROJECT
R-30397	0100701

Not for Construction

12:10:44 PM 8/26/2016 P:\0170190\Plans\PlanProf\04_PP_US27_SB_103.dgn

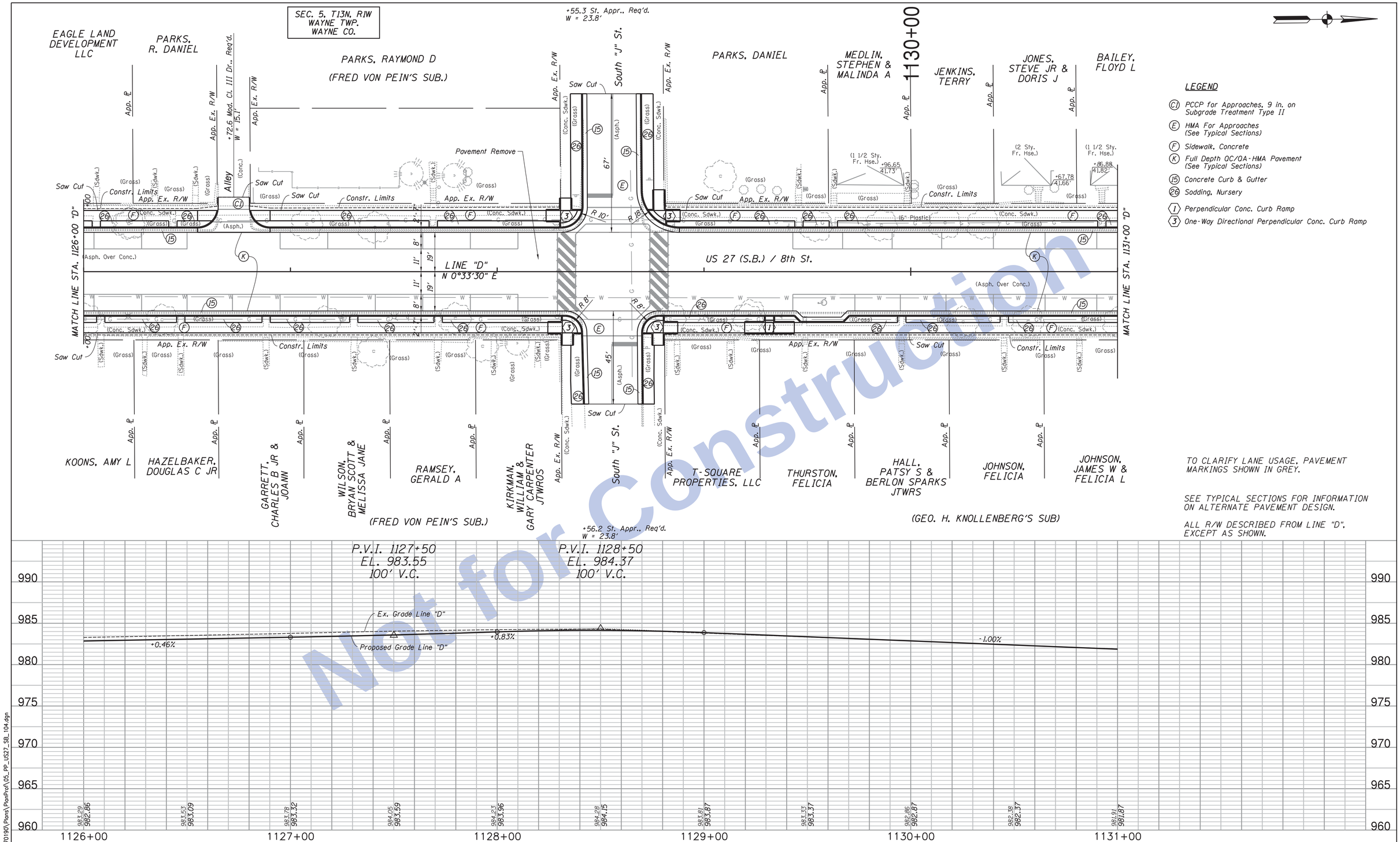

LEGEND

- (C1) PCCP for Approaches, 9 in. on Subgrade Treatment Type II
- (E) HMA For Approaches (See Typical Sections)
- (F) Sidewalk, Concrete
- (K) Full Depth QC/QA-HMA Pavement (See Typical Sections)
- (15) Concrete Curb & Gutter
- (26) Sodding, Nursery
- (1) Perpendicular Conc. Curb Ramp
- (3) One-Way Directional Perpendicular Conc. Curb Ramp

TO CLARIFY LANE USAGE, PAVEMENT MARKINGS SHOWN IN GREY.

SEE TYPICAL SECTIONS FOR INFORMATION ON ALTERNATE PAVEMENT DESIGN.

ALL R/W DESCRIBED FROM LINE "D", EXCEPT AS SHOWN.

Not for Construction

SEE SHEETS 11 & 12 FOR REFERENCE POINTS

Clark Dietz ENGINEERS

RECOMMENDED FOR APPROVAL _____ DESIGN ENGINEER DATE

DESIGNED: JAL DRAWN: MP
CHECKED: RBI CHECKED: JAL

INDIANA DEPARTMENT OF TRANSPORTATION

PLAN & PROFILE
US 27 SOUTHBOUND

HORIZONTAL SCALE	BRIDGE FILE
1" = 20'	
VERTICAL SCALE	DESIGNATION
1" = 5'	0100701
SURVEY BOOK	SHEETS
	95 of 278
CONTRACT	PROJECT
R-30397	0100701

12:10:46 PM 8/26/2016 P:\0170190\Plans\PlanProf\05_PP_US27_SB_104.dgn

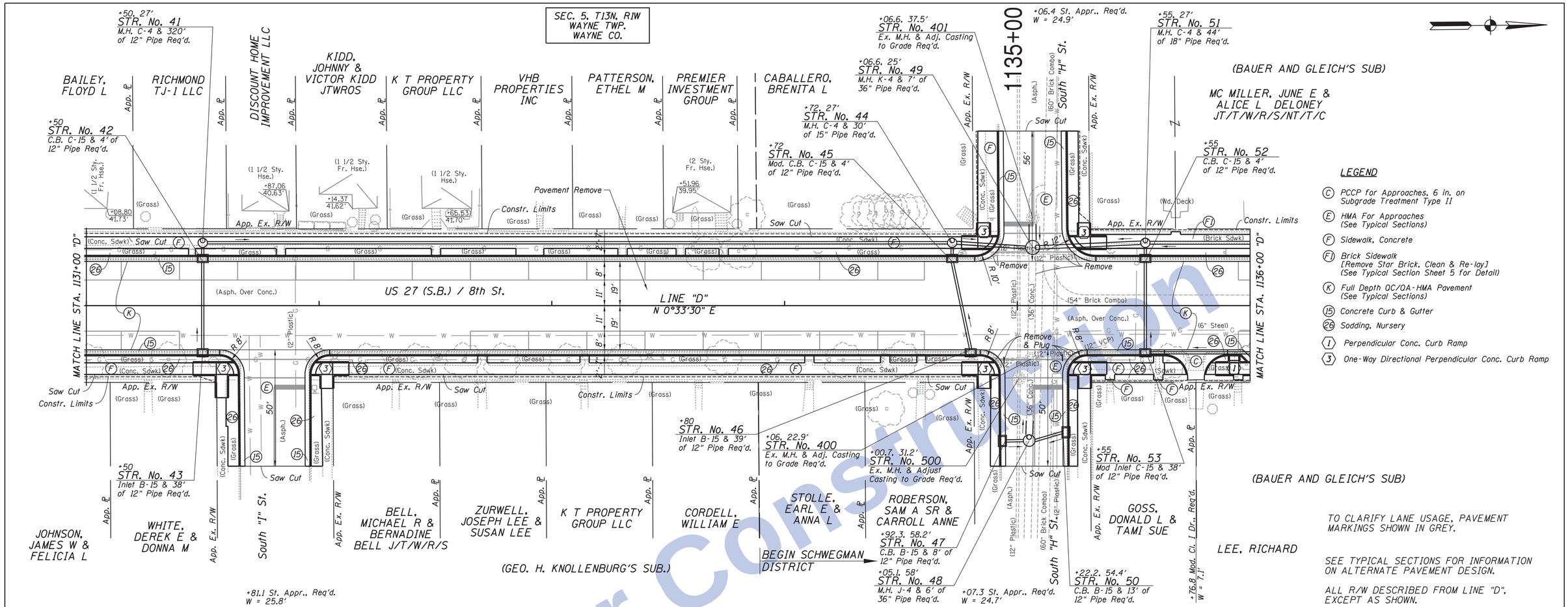

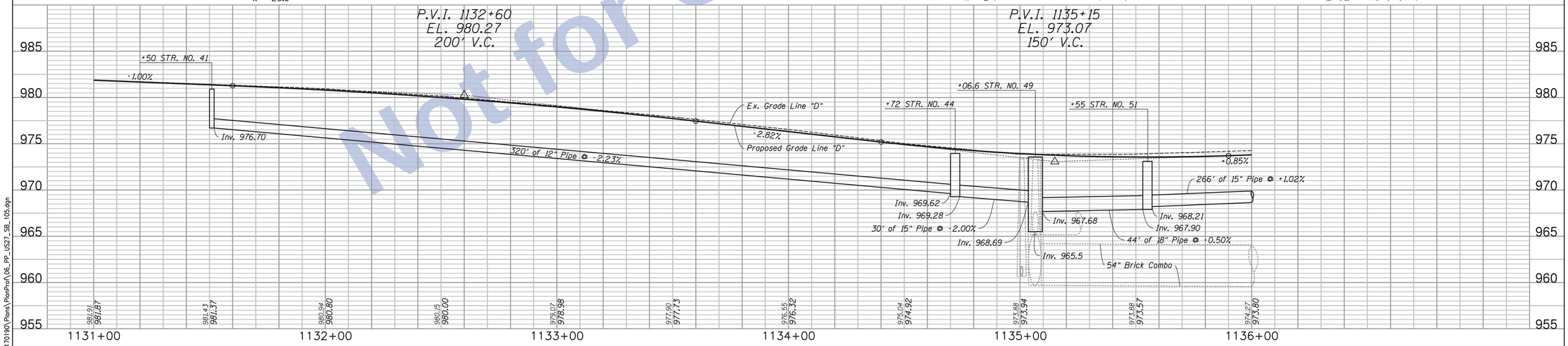

SEE SHEETS 11 & 12 FOR REFERENCE POINTS

TBM #32: Cut "X" in W. Bolt F. Hyd. Sta. 1135+39.13"D", 22.96' Rt. Adjusted El. = 975.7385

Clark Dietz ENGINEERS

RECOMMENDED FOR APPROVAL _____ DESIGN ENGINEER DATE

DESIGNED: JAL DRAWN: MP
CHECKED: RBI CHECKED: JAL

INDIANA DEPARTMENT OF TRANSPORTATION

PLAN & PROFILE US 27 SOUTHBOUND

HORIZONTAL SCALE	BRIDGE FILE
1" = 20'	
VERTICAL SCALE	DESIGNATION
1" = 5'	0100701
SURVEY BOOK	SHEETS
	96 of 278
CONTRACT	PROJECT
R-30397	0100701

12:10:48 PM 8/26/2016 P:\0170190\Plans\PlanProf\06_PP_US27_SB_105.dgn

Not for Construction

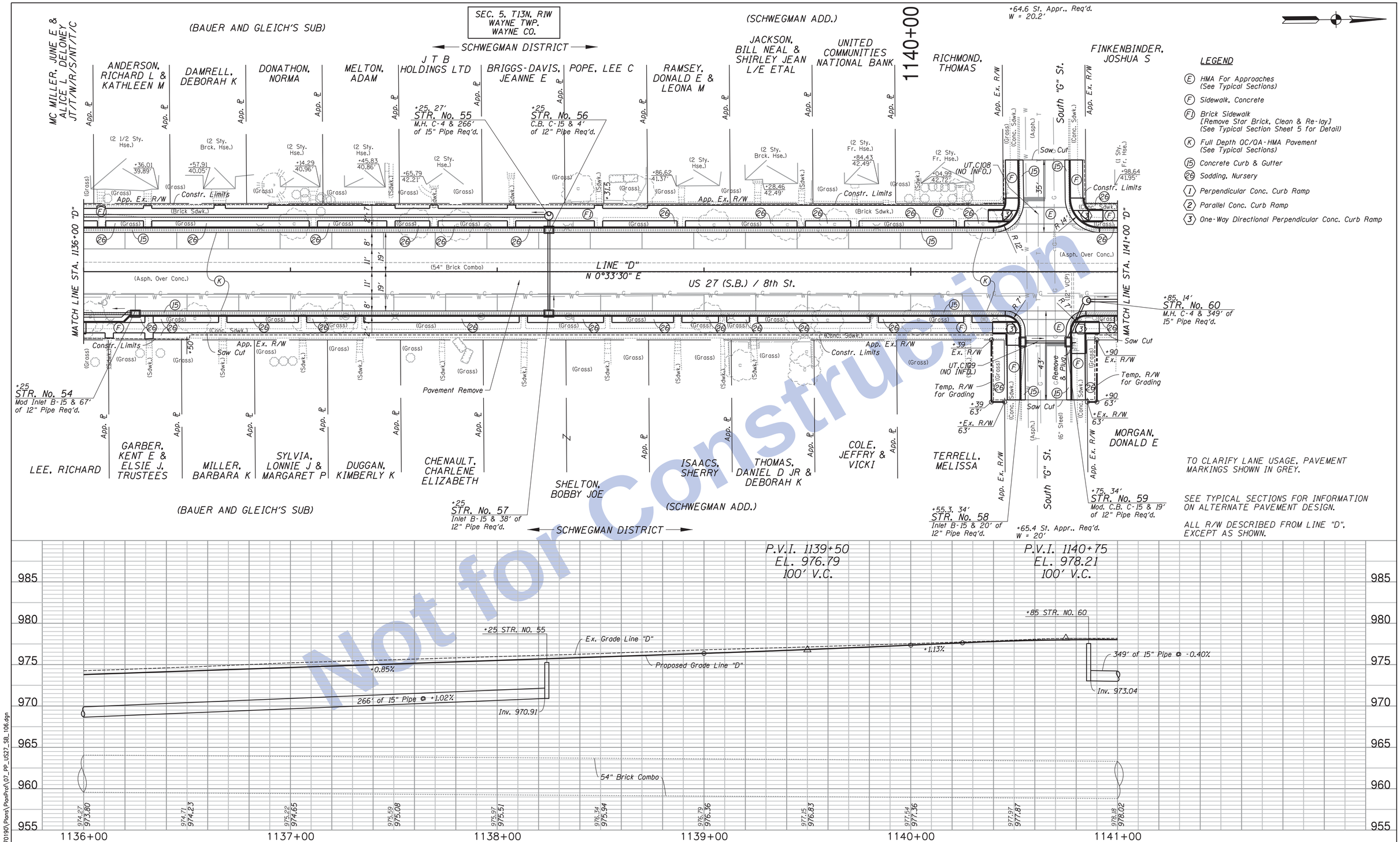

LEGEND

- (E) HMA For Approaches (See Typical Sections)
- (F) Sidewalk, Concrete
- (F1) Brick Sidewalk [Remove Star Brick, Clean & Re-lay] (See Typical Section Sheet 5 for Detail)
- (K) Full Depth QC/QA-HMA Pavement (See Typical Sections)
- (15) Concrete Curb & Gutter
- (26) Sodding, Nursery
- (1) Perpendicular Conc. Curb Ramp
- (2) Parallel Conc. Curb Ramp
- (3) One-Way Directional Perpendicular Conc. Curb Ramp

TO CLARIFY LANE USAGE, PAVEMENT MARKINGS SHOWN IN GREY.

SEE TYPICAL SECTIONS FOR INFORMATION ON ALTERNATE PAVEMENT DESIGN.

ALL R/W DESCRIBED FROM LINE "D", EXCEPT AS SHOWN.

Not for Construction

SEE SHEETS 11 & 12 FOR REFERENCE POINTS

Clark Dietz ENGINEERS

RECOMMENDED FOR APPROVAL _____ DESIGN ENGINEER DATE

DESIGNED: JAL DRAWN: MP
CHECKED: RBI CHECKED: JAL

INDIANA DEPARTMENT OF TRANSPORTATION

PLAN & PROFILE
US 27 SOUTHBOUND

HORIZONTAL SCALE	BRIDGE FILE
1" = 20'	
VERTICAL SCALE	DESIGNATION
1" = 5'	0100701
SURVEY BOOK	SHEETS
	97 of 278
CONTRACT	PROJECT
R-30397	0100701

12:10:50 PM 8/26/2016 P:\0170190\Plans\PlanProf\07_PP_US27_SB_106.dgn

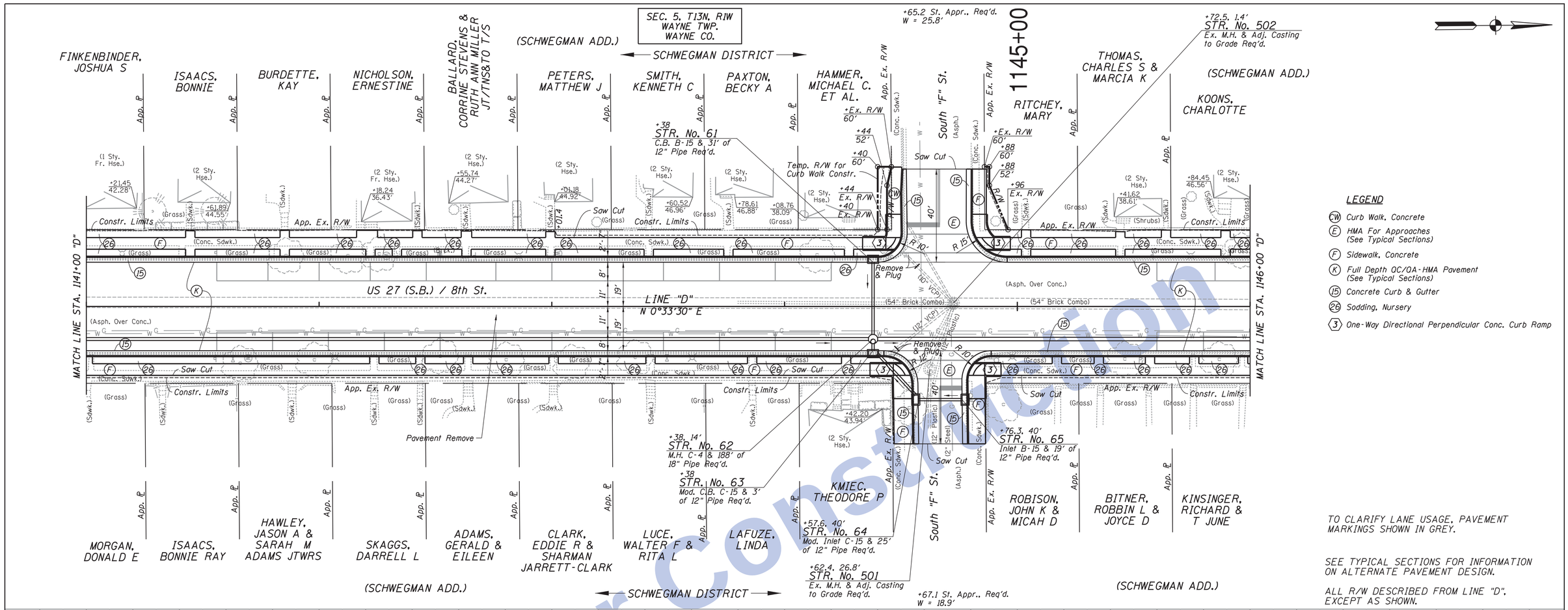

LEGEND

- (CW) Curb Walk, Concrete
- (E) HMA For Approaches (See Typical Sections)
- (F) Sidewalk, Concrete
- (K) Full Depth QC/QA-HMA Pavement (See Typical Sections)
- (15) Concrete Curb & Gutter
- (26) Sodding, Nursery
- (3) One-Way Directional Perpendicular Conc. Curb Ramp

TO CLARIFY LANE USAGE, PAVEMENT MARKINGS SHOWN IN GREY.

SEE TYPICAL SECTIONS FOR INFORMATION ON ALTERNATE PAVEMENT DESIGN.

ALL R/W DESCRIBED FROM LINE "D", EXCEPT AS SHOWN.

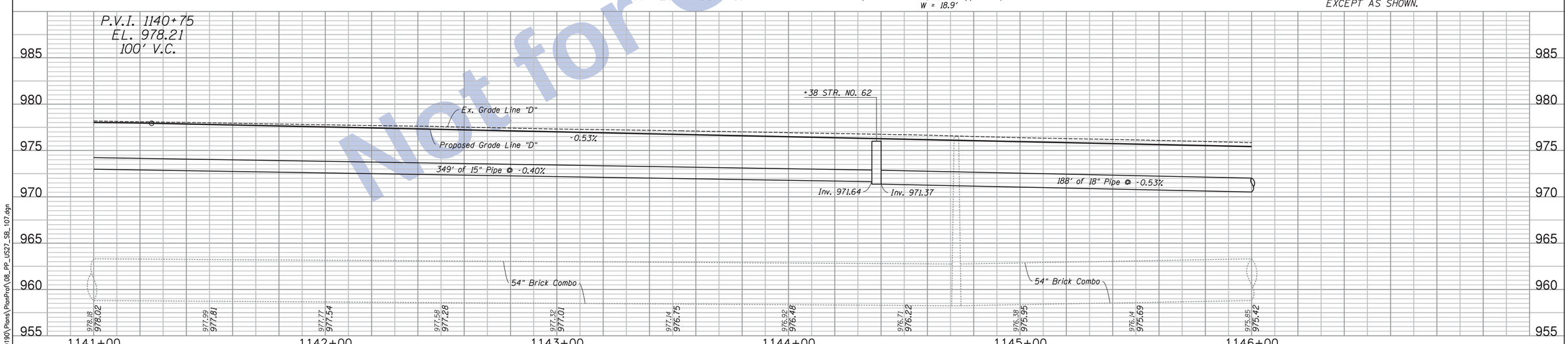

Not for Construction

SEE SHEETS 11 & 12 FOR REFERENCE POINTS

TBM #33: Cut "X" in E Bolt F. Hyd. @ NE Cor. S "F" St. & S 8th ST. Sta. 1144+91.0"D", 23.1' Rt. Adjusted El. = 978.4633

Clark Dietz ENGINEERS

RECOMMENDED FOR APPROVAL _____ DESIGN ENGINEER DATE

DESIGNED: JAL DRAWN: MP
CHECKED: RBI CHECKED: JAL

INDIANA DEPARTMENT OF TRANSPORTATION

PLAN & PROFILE
US 27 SOUTHBOUND

HORIZONTAL SCALE	BRIDGE FILE
1" = 20'	
VERTICAL SCALE	DESIGNATION
1" = 5'	0100701
SURVEY BOOK	SHEETS
	98 of 278
CONTRACT	PROJECT
R-30397	0100701

12:10:52 PM 8/26/2016 P:\0170190\Plans\PlanProf\08_PP_US27_SB_107.dgn

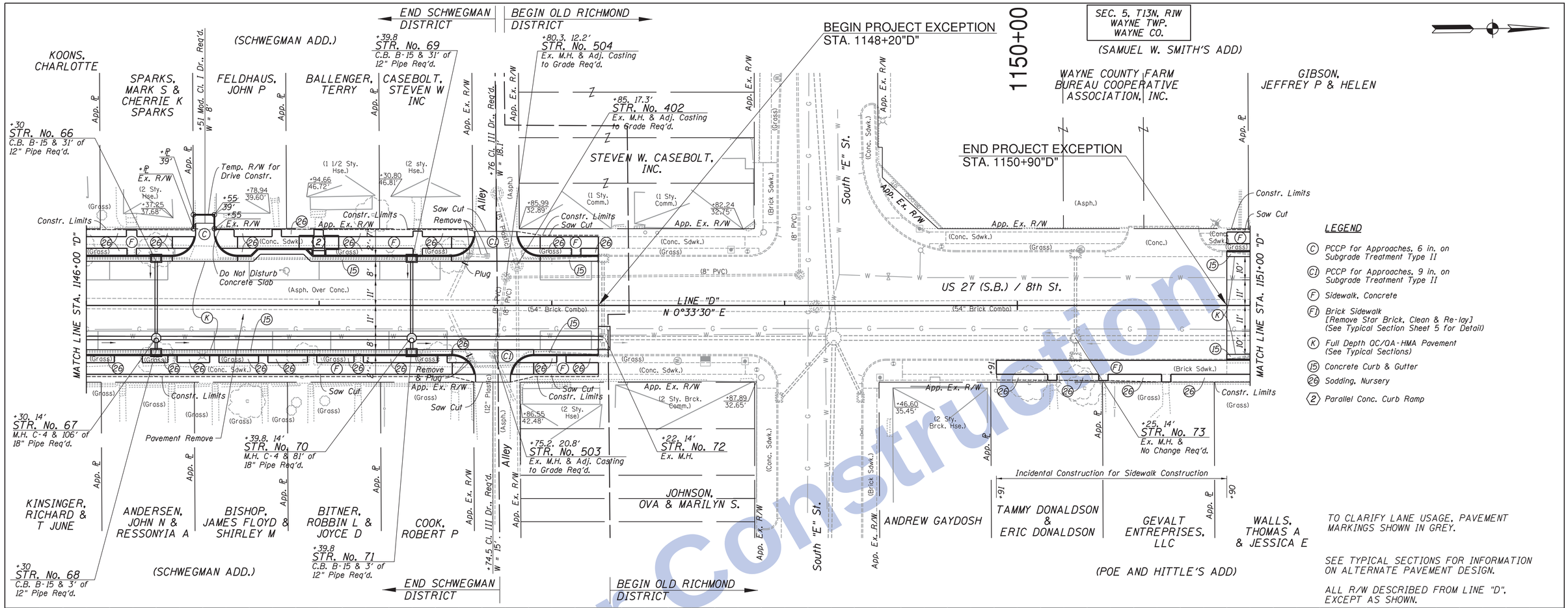

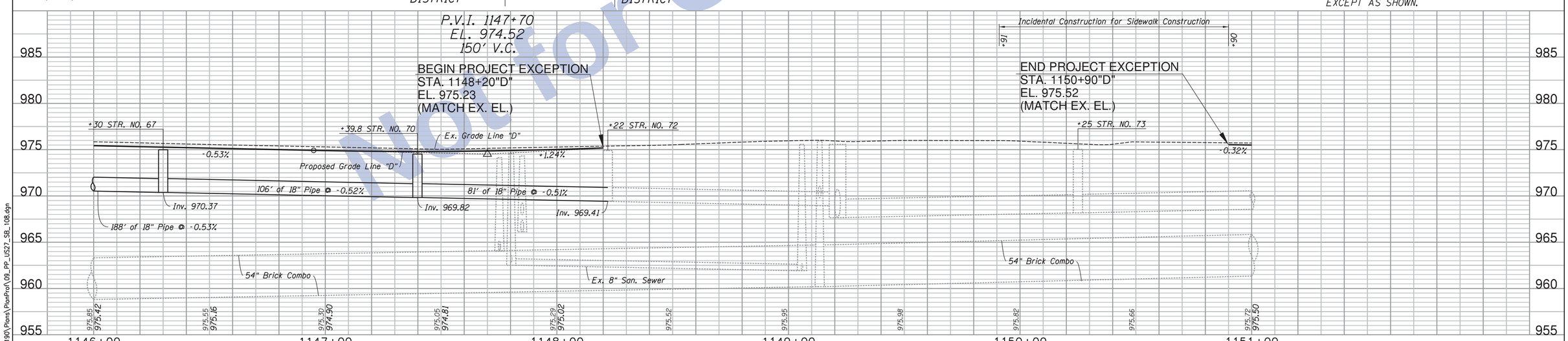

Not for Construction

SEE SHEETS 11 & 12 FOR REFERENCE POINTS

TBM #34: Cut "X" in W Bolt F. Hyd. Sta. 1149+58.60"D", 24.19' Lt. Adjusted El. = 977.7936

Clark Dietz ENGINEERS

RECOMMENDED FOR APPROVAL _____ DESIGN ENGINEER DATE

DESIGNED: JAL DRAWN: MP
CHECKED: RBI CHECKED: JAL

INDIANA DEPARTMENT OF TRANSPORTATION

PLAN & PROFILE
US 27 SOUTHBOUND

HORIZONTAL SCALE	BRIDGE FILE
1" = 20'	
VERTICAL SCALE	DESIGNATION
1" = 5'	0100701
SURVEY BOOK	SHEETS
	99 of 278
CONTRACT	PROJECT
R-30397	0100701

12:10:53 PM 8/26/2016 P:\0170190\Plans\PlanProf\09_PP_US27_SB_108.dgn

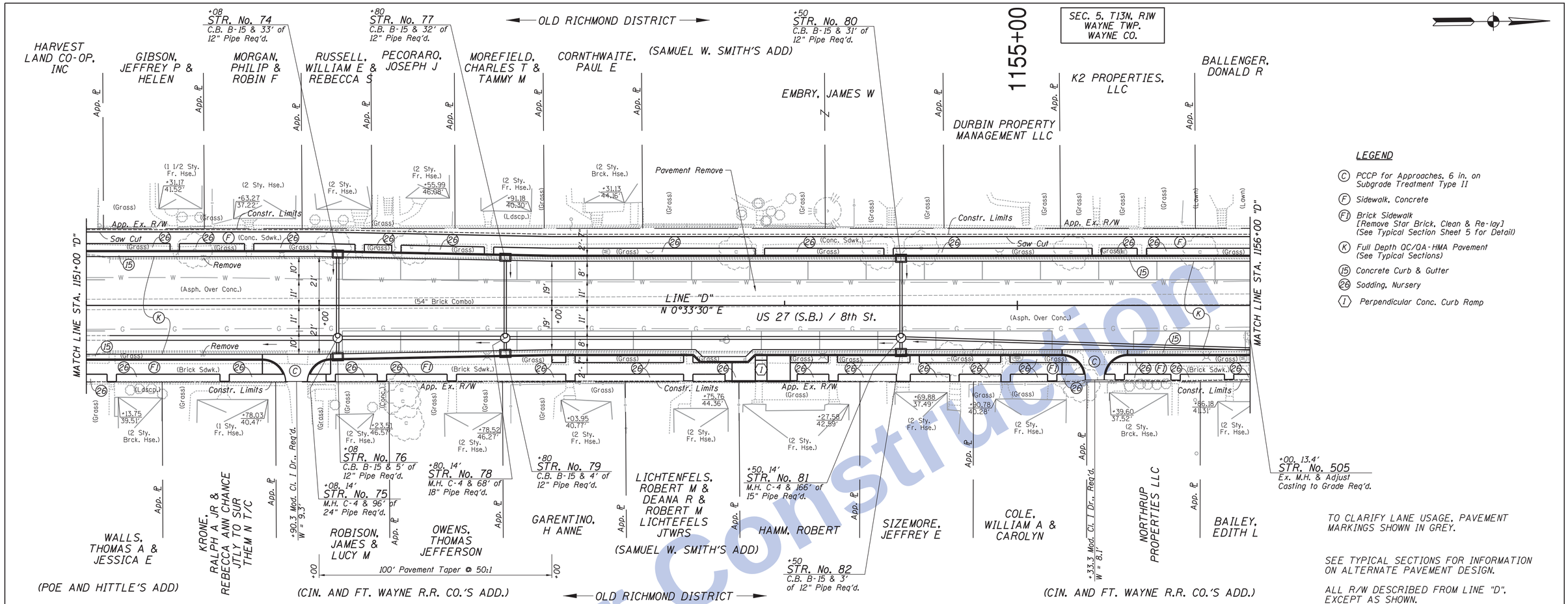

Not for Construction

SEE SHEETS 11 & 12 FOR REFERENCE POINTS

Clark Dietz ENGINEERS

RECOMMENDED FOR APPROVAL _____ DESIGN ENGINEER DATE

DESIGNED: JAL DRAWN: MP
CHECKED: RBI CHECKED: JAL

INDIANA DEPARTMENT OF TRANSPORTATION

PLAN & PROFILE
US 27 SOUTHBOUND

HORIZONTAL SCALE	BRIDGE FILE
1" = 20'	
VERTICAL SCALE	DESIGNATION
1" = 5'	0100701
SURVEY BOOK	SHEETS
	100 of 278
CONTRACT	PROJECT
R-30397	0100701

12:10:55 PM 8/26/2016 P:\0170190\Plans\PlanProf\10_PP_US27_SB_109.dgn

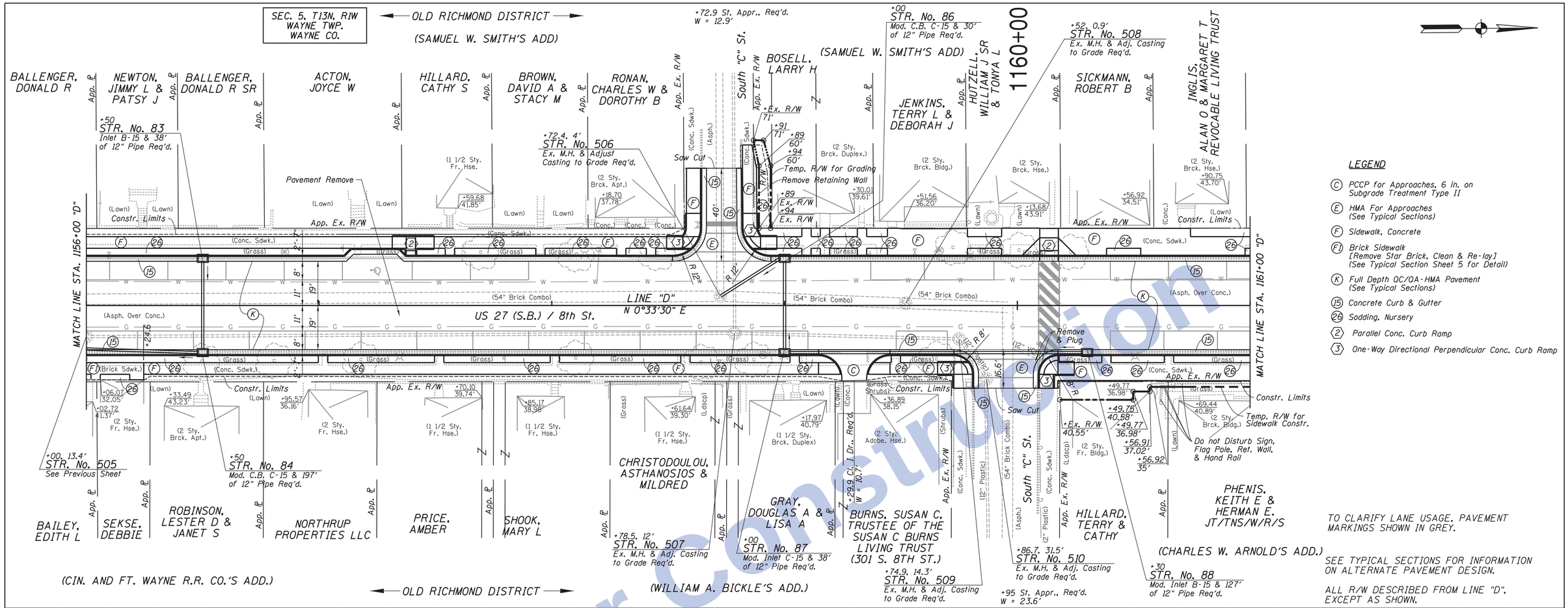

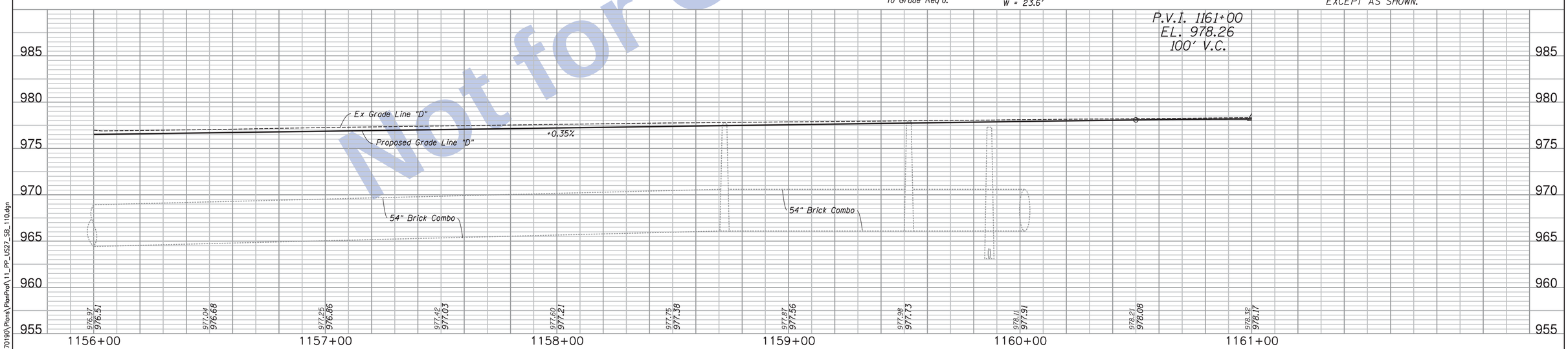

Not for Construction

SEE SHEETS 11 & 12 FOR REFERENCE POINTS

TBM #35: Cut "X" in N. Bolt of F. Hyd. Sta. 1158+20.05"D", 24.30' Lt. Adjusted El. = 979.2926

Clark Dietz ENGINEERS

RECOMMENDED FOR APPROVAL _____ DESIGN ENGINEER DATE

DESIGNED: JAL DRAWN: MP
CHECKED: RBI CHECKED: JAL

INDIANA DEPARTMENT OF TRANSPORTATION

PLAN & PROFILE
US 27 SOUTHBOUND

HORIZONTAL SCALE	BRIDGE FILE
1" = 20'	
VERTICAL SCALE	DESIGNATION
1" = 5'	0100701
SURVEY BOOK	SHEETS
	101 of 278
CONTRACT	PROJECT
R-30397	0100701

12:10:57 PM 8/26/2016 P:\0170190\Plans\PlanProf\11_PP_US27_S8_110.dgn

SEC. 5, T13N, R1W
WAYNE TWP.
WAYNE CO.

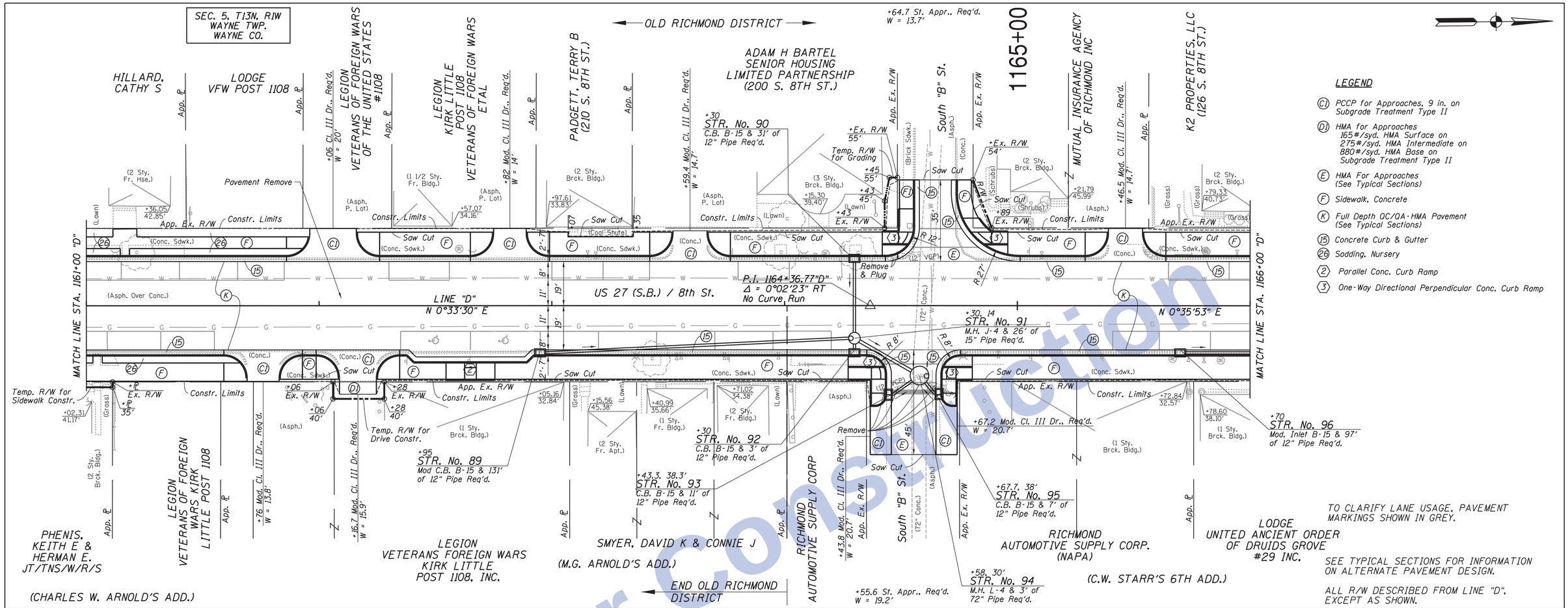

LEGEND

- (C1) PCCP for Approaches, 9 in. on Subgrade Treatment Type II
- (D1) HMA for Approaches 165#/syd. HMA Surface on 275#/syd. HMA Intermediate on 880#/syd. HMA Base on Subgrade Treatment Type II
- (E) HMA For Approaches (See Typical Sections)
- (F) Sidewalk, Concrete
- (K) Full Depth OC/QA-HMA Pavement (See Typical Sections)
- (15) Concrete Curb & Gutter
- (26) Sodding, Nursery
- (2) Parallel Conc. Curb Ramp
- (3) One-Way Directional Perpendicular Conc. Curb Ramp

TO CLARIFY LANE USAGE, PAVEMENT MARKINGS SHOWN IN GREY.

SEE TYPICAL SECTIONS FOR INFORMATION ON ALTERNATE PAVEMENT DESIGN.

ALL R/W DESCRIBED FROM LINE "D", EXCEPT AS SHOWN.

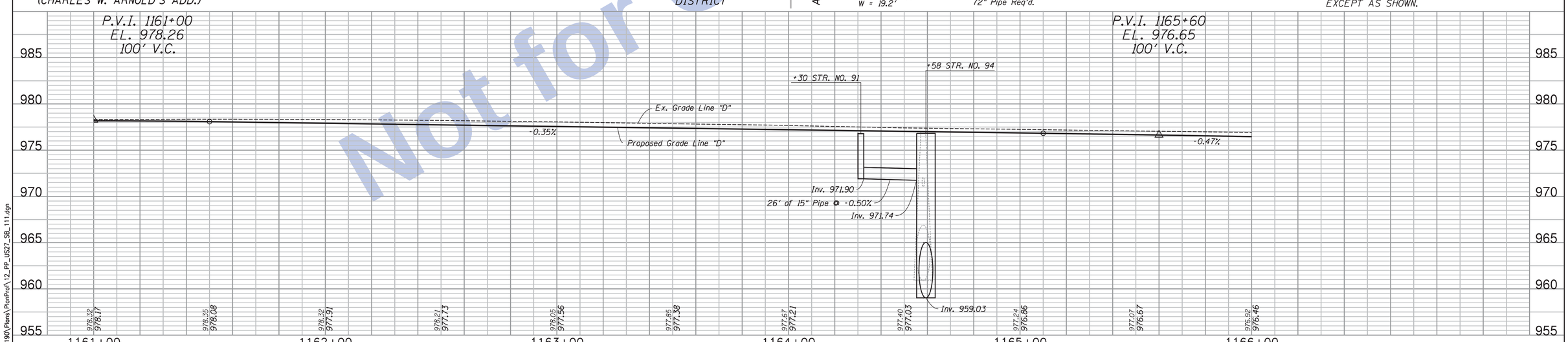

SEE SHEETS 11 & 12 FOR REFERENCE POINTS

Clark Dietz ENGINEERS

RECOMMENDED FOR APPROVAL _____ DESIGN ENGINEER DATE

DESIGNED: JAL | DRAWN: MP
CHECKED: RBI | CHECKED: JAL

INDIANA DEPARTMENT OF TRANSPORTATION

PLAN & PROFILE
US 27 SOUTHBOUND

HORIZONTAL SCALE	BRIDGE FILE
1" = 20'	
VERTICAL SCALE	DESIGNATION
1" = 5'	0100701
SURVEY BOOK	SHEETS
	102 of 278
CONTRACT	PROJECT
R-30397	0100701

Not for Construction

12:10:59 PM 8/26/2016 P:\0170190\Plans\PlanProf\12_PP_US27_SB_111.dgn

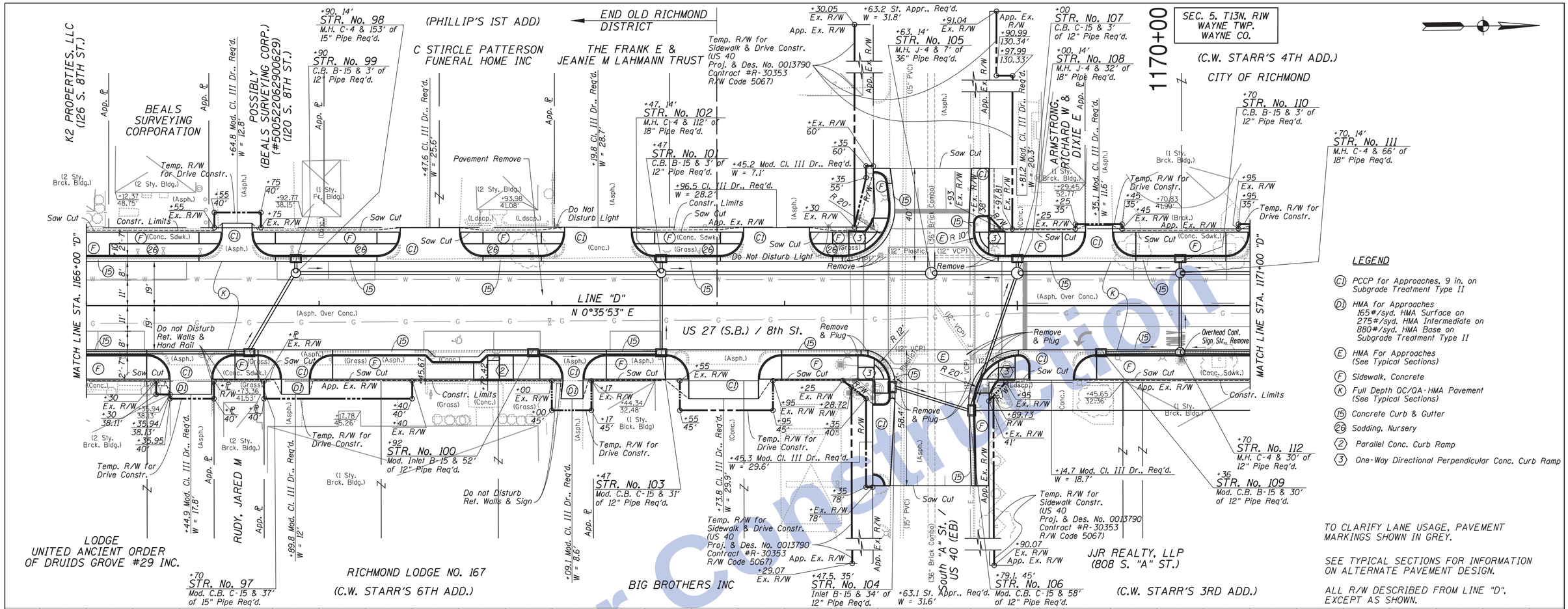

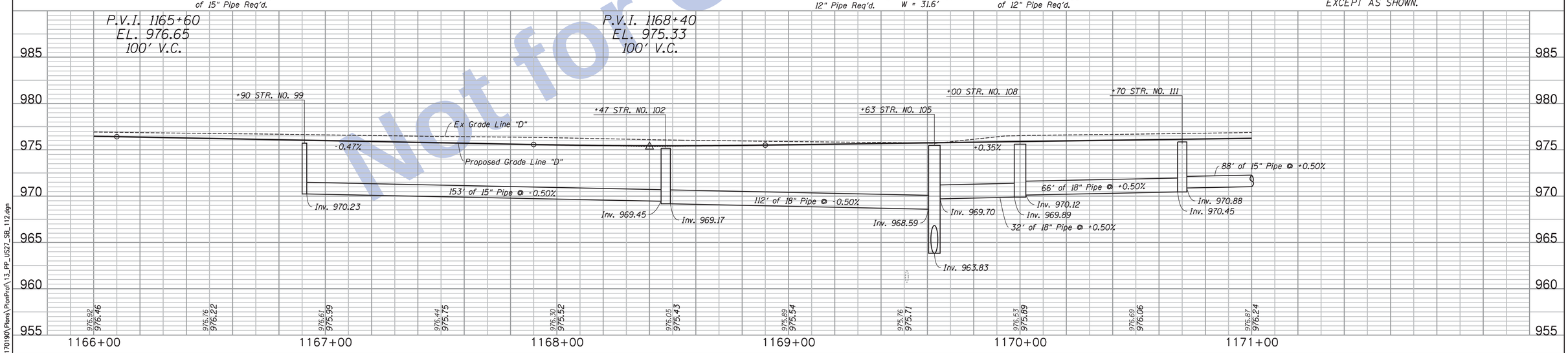

SEE SHEETS 11 & 12 FOR REFERENCE POINTS

TBM #36: Cut "X" on E Bolt of F. Hyd. Sta. 1170+42.91'D', 22.53' Rt. Adjusted El. = 978.0261

Clark Dietz ENGINEERS

RECOMMENDED FOR APPROVAL _____ DESIGN ENGINEER DATE

DESIGNED: JAL | DRAWN: MP
CHECKED: RBI | CHECKED: JAL

INDIANA DEPARTMENT OF TRANSPORTATION

PLAN & PROFILE
US 27 SOUTHBOUND

HORIZONTAL SCALE	BRIDGE FILE
1" = 20'	
VERTICAL SCALE	DESIGNATION
1" = 5'	0100701
SURVEY BOOK	SHEETS
	103 of 278
CONTRACT	PROJECT
R-30397	0100701

12:11:01 PM 8/26/2016 P:\0170190\Plans\PlanProf\13_PP_US27_SB_112.dgn

Not for Construction

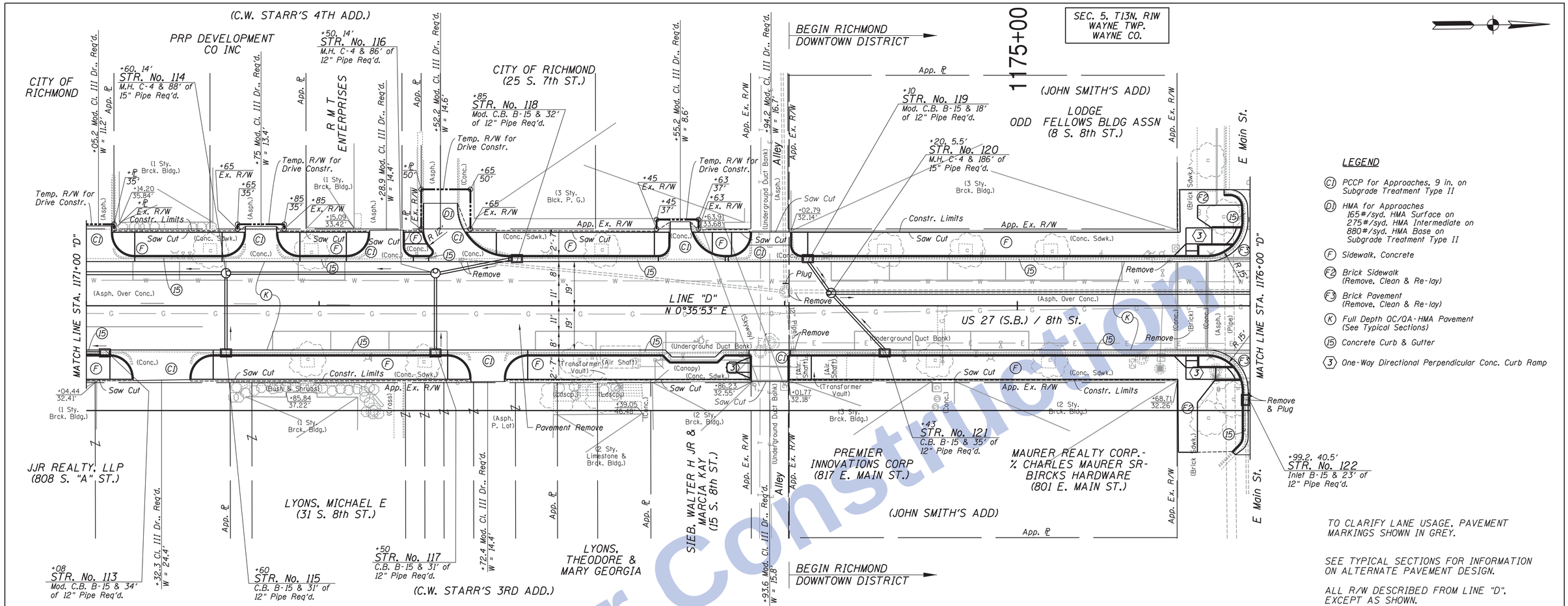

LEGEND

- (C1) PCCP for Approaches, 9 in. on Subgrade Treatment Type II
- (D1) HMA for Approaches 165#/syd. HMA Surface on 275#/syd. HMA Intermediate on 880#/syd. HMA Base on Subgrade Treatment Type II
- (F) Sidewalk, Concrete
- (F2) Brick Sidewalk (Remove, Clean & Re-lay)
- (F3) Brick Pavement (Remove, Clean & Re-lay)
- (K) Full Depth OC/OA-HMA Pavement (See Typical Sections)
- (15) Concrete Curb & Gutter
- (3) One-Way Directional Perpendicular Conc. Curb Ramp

TO CLARIFY LANE USAGE, PAVEMENT MARKINGS SHOWN IN GREY.

SEE TYPICAL SECTIONS FOR INFORMATION ON ALTERNATE PAVEMENT DESIGN.

ALL R/W DESCRIBED FROM LINE "D", EXCEPT AS SHOWN.

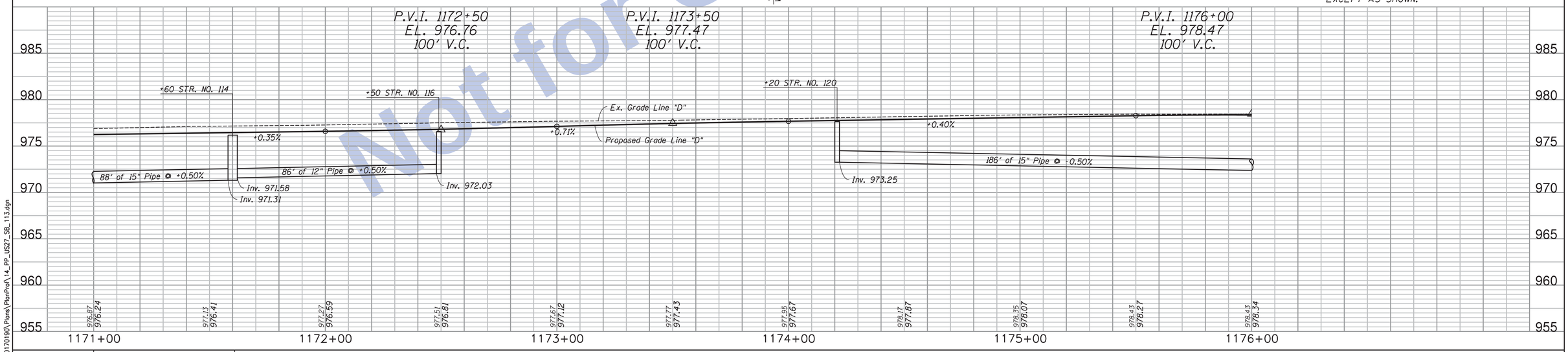

SEE SHEETS 11 & 12 FOR REFERENCE POINTS

Clark Dietz ENGINEERS

RECOMMENDED FOR APPROVAL _____ DESIGN ENGINEER DATE

DESIGNED: JAL DRAWN: MP
CHECKED: RBI CHECKED: JAL

INDIANA DEPARTMENT OF TRANSPORTATION

PLAN & PROFILE
US 27 SOUTHBOUND

HORIZONTAL SCALE	BRIDGE FILE
1" = 20'	
VERTICAL SCALE	DESIGNATION
1" = 5'	0100701
SURVEY BOOK	SHEETS
	104 of 278
CONTRACT	PROJECT
R-30397	0100701

12:11:03 PM 8/26/2016 P:\0170190\Plans\PlanProf\14_PP_US27_SB_113.dgn

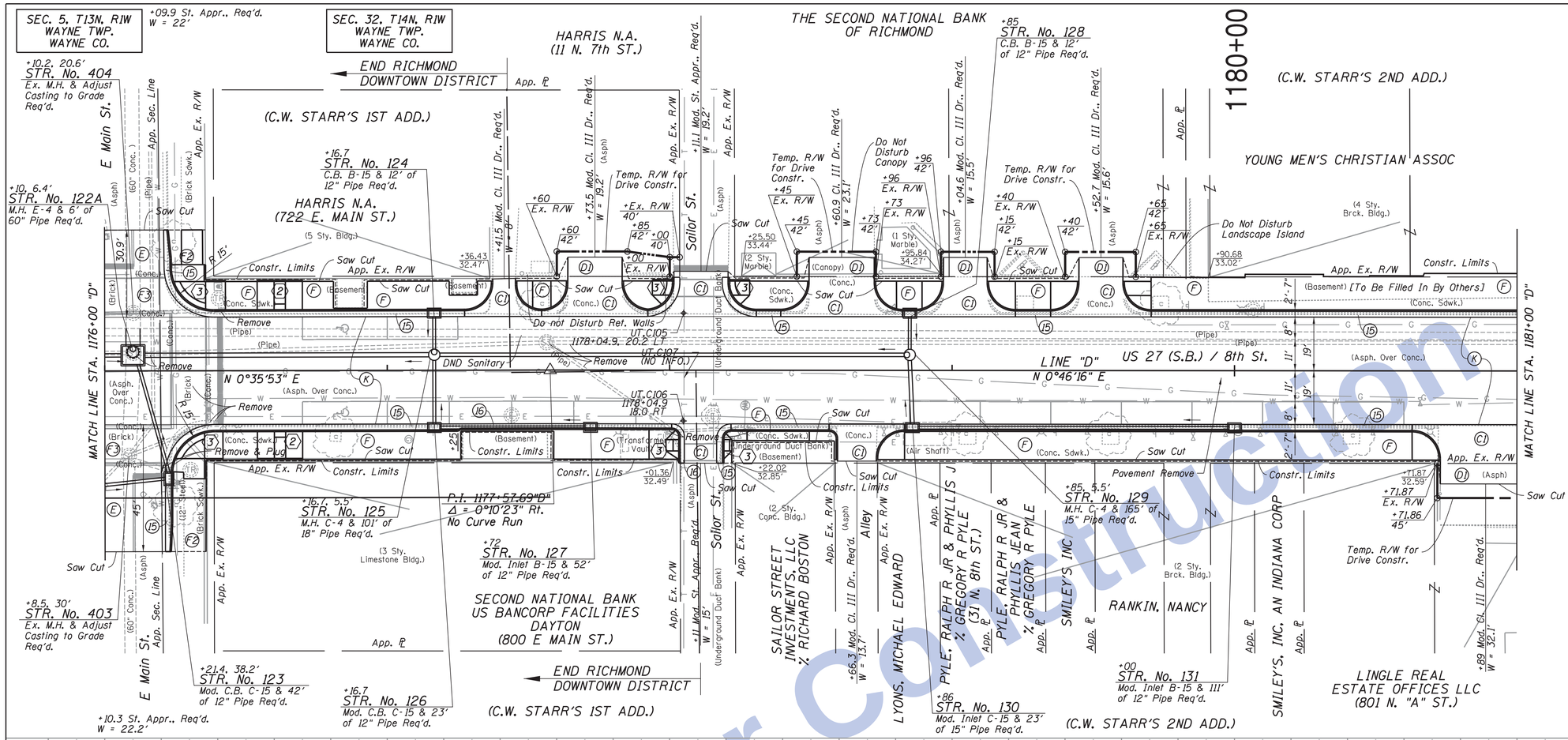

LEGEND

- (C1) PCCP for Approaches, 9 in. on Subgrade Treatment Type II
- (D1) HMA for Approaches 165#/syd. HMA Surface on 275#/syd. HMA Intermediate on 880#/syd. HMA Base on Subgrade Treatment Type II
- (E) HMA For Approaches (See Typical Sections)
- (F) Sidewalk, Concrete
- (F2) Brick Sidewalk (Remove, Clean & Re-lay)
- (F3) Brick Pavement (Remove, Clean & Re-lay)
- (K) Full Depth QC/QA-HMA Pavement (See Typical Sections)
- (15) Concrete Curb & Gutter
- (16) Concrete Curb & Gutter, 2' Modified
- (2) Parallel Conc. Curb Ramp
- (3) One-Way Directional Perpendicular Conc. Curb Ramp

TO CLARIFY LANE USAGE, PAVEMENT MARKINGS SHOWN IN GREY.

SEE TYPICAL SECTIONS FOR INFORMATION ON ALTERNATE PAVEMENT DESIGN.

ALL R/W DESCRIBED FROM LINE "D", EXCEPT AS SHOWN.

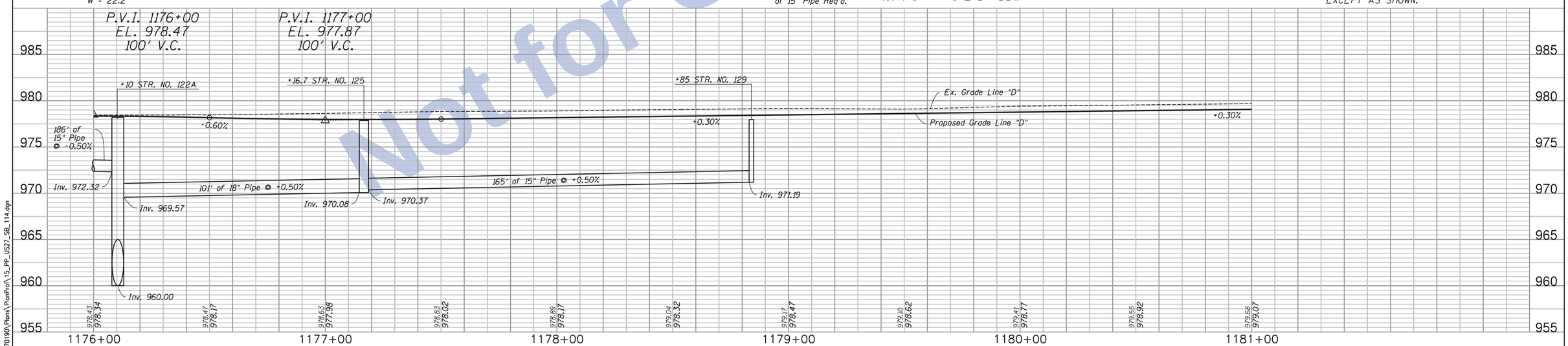

SEE SHEETS 11 & 12 FOR REFERENCE POINTS

Clark Dietz ENGINEERS

RECOMMENDED FOR APPROVAL _____ DESIGN ENGINEER DATE

DESIGNED: JAL | DRAWN: MP
CHECKED: RBI | CHECKED: JAL

INDIANA DEPARTMENT OF TRANSPORTATION

PLAN & PROFILE
US 27 SOUTHBOUND

HORIZONTAL SCALE	BRIDGE FILE
1" = 20'	
VERTICAL SCALE	DESIGNATION
1" = 5'	0100701
SURVEY BOOK	SHEETS
	105 of 278
CONTRACT	PROJECT
R-30397	0100701

Not for Construction

12:11:04 PM 8/26/2016 P:\0170190\Plans\PlanProf\15_PP_US27_SB_114.dgn

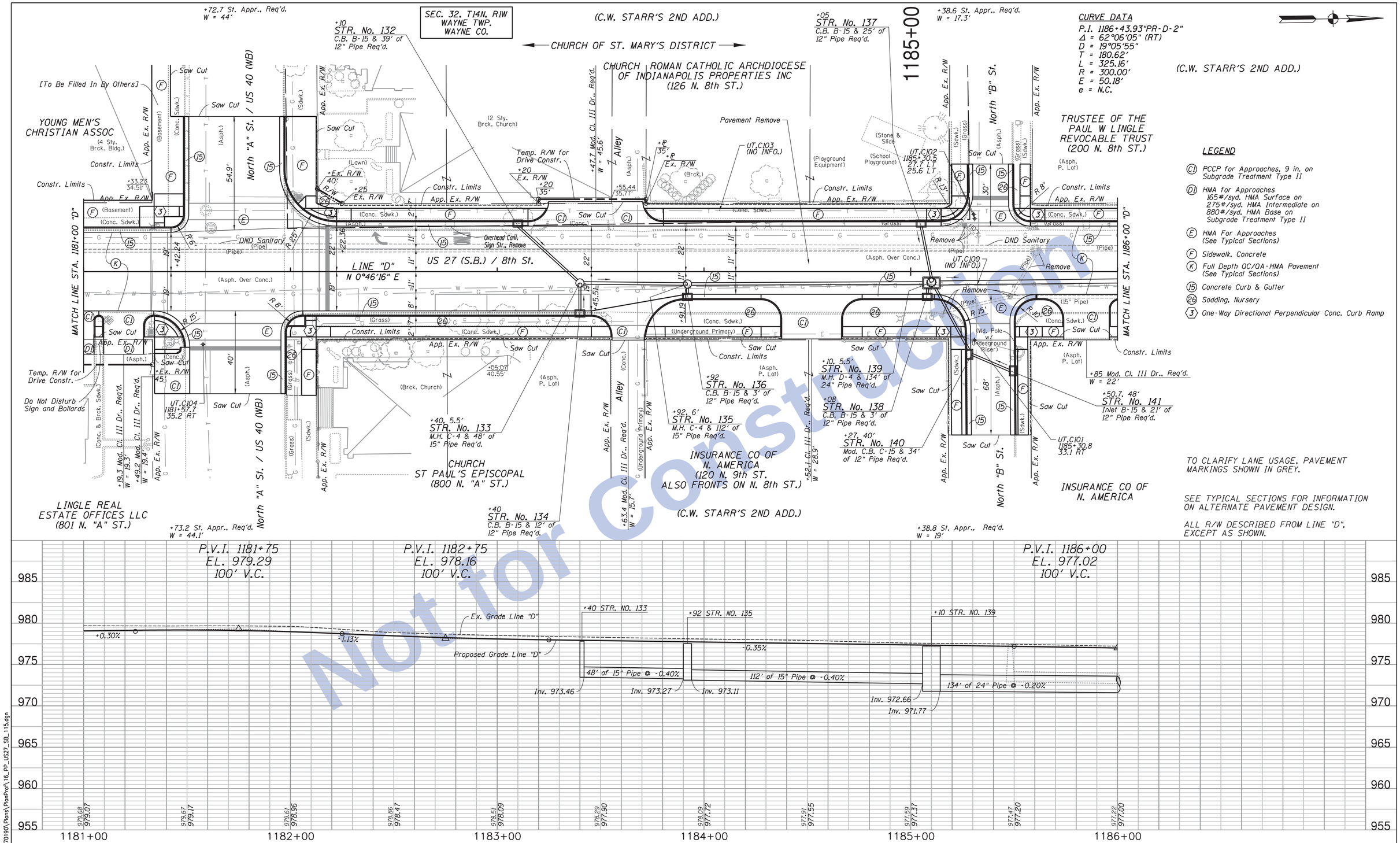

Not for Construction

SEE SHEETS 11 & 12 FOR REFERENCE POINTS

TBM #37: Cut "X" on W Side F. Hyd. Sta. 1182+32.73"D", 22.58' Rt. Adjusted El. = 980.3056

Clark Dietz ENGINEERS

RECOMMENDED FOR APPROVAL _____ DESIGN ENGINEER DATE

DESIGNED: JAL | DRAWN: MP
CHECKED: RBI | CHECKED: JAL

INDIANA DEPARTMENT OF TRANSPORTATION

PLAN & PROFILE
US 27 SOUTHBOUND

HORIZONTAL SCALE	BRIDGE FILE
1" = 20'	
VERTICAL SCALE	DESIGNATION
1" = 5'	0100701
SURVEY BOOK	SHEETS
	106 of 278
CONTRACT	PROJECT
R-30397	0100701

12:11:06 PM 8/26/2016 P:\0170190\Plans\PlanProf\16_PP_US27_SB_115.dgn

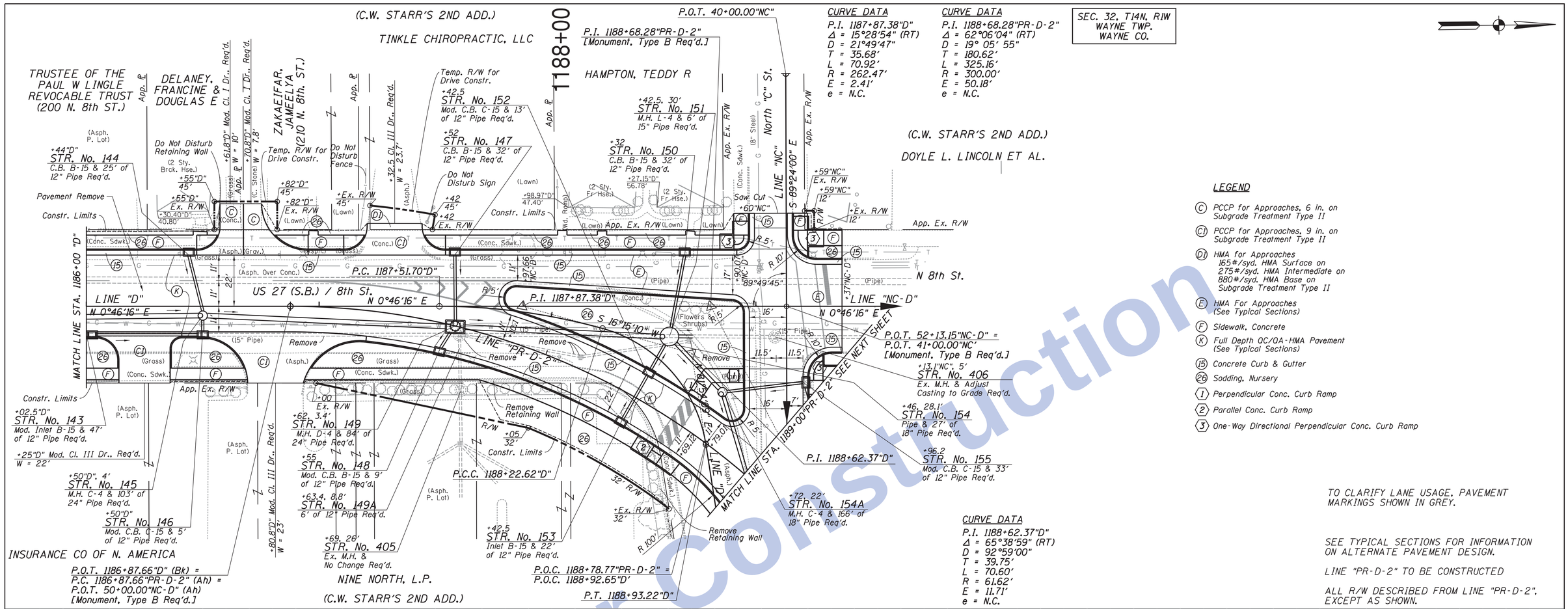

SEC. 32, T14N, R1W
WAYNE TWP.
WAYNE CO.

CURVE DATA
P.I. 1187+87.38"D"
Δ = 15°28'54" (RT)
D = 21°49'47"
T = 35.68'
L = 70.92'
R = 262.47'
E = 2.41'
e = N.C.

CURVE DATA
P.I. 1188+68.28"PR-D-2"
Δ = 62°06'04" (RT)
D = 19° 05' 55"
T = 180.62'
L = 325.16'
R = 300.00'
E = 50.18'
e = N.C.

CURVE DATA
P.I. 1188+62.37"D"
Δ = 65°38'59" (RT)
D = 92°59'00"
T = 39.75'
L = 70.60'
R = 61.62'
E = 11.71'
e = N.C.

LEGEND

- (C) PCCP for Approaches, 6 in. on Subgrade Treatment Type II
- (C1) PCCP for Approaches, 9 in. on Subgrade Treatment Type II
- (D1) HMA for Approaches 165#/syd. HMA Surface on 275#/syd. HMA Intermediate on 880#/syd. HMA Base on Subgrade Treatment Type II
- (E) HMA For Approaches (See Typical Sections)
- (F) Sidewalk, Concrete
- (K) Full Depth QC/QA-HMA Pavement (See Typical Sections)
- (15) Concrete Curb & Gutter
- (26) Sodding, Nursery
- (1) Perpendicular Conc. Curb Ramp
- (2) Parallel Conc. Curb Ramp
- (3) One-Way Directional Perpendicular Conc. Curb Ramp

TO CLARIFY LANE USAGE, PAVEMENT MARKINGS SHOWN IN GREY.

SEE TYPICAL SECTIONS FOR INFORMATION ON ALTERNATE PAVEMENT DESIGN.

LINE "PR-D-2" TO BE CONSTRUCTED

ALL R/W DESCRIBED FROM LINE "PR-D-2", EXCEPT AS SHOWN.

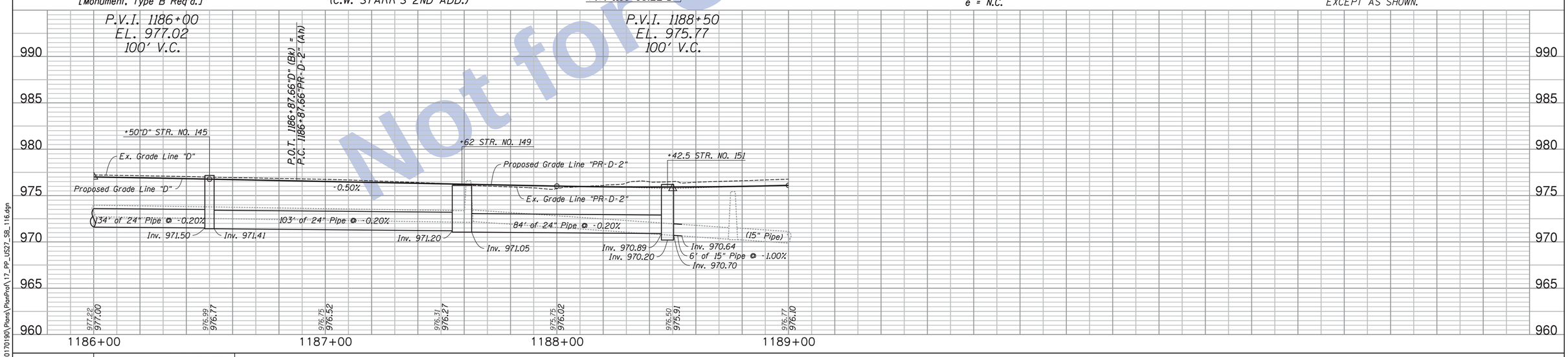

SEE SHEETS 11 & 12 FOR REFERENCE POINTS

Clark Dietz ENGINEERS

RECOMMENDED FOR APPROVAL _____ DESIGN ENGINEER DATE

DESIGNED: JAL DRAWN: MP
CHECKED: RBI CHECKED: JAL

INDIANA DEPARTMENT OF TRANSPORTATION

PLAN & PROFILE
US 27 SOUTHBOUND

HORIZONTAL SCALE	BRIDGE FILE
1" = 20'	
VERTICAL SCALE	DESIGNATION
1" = 5'	0100701
SURVEY BOOK	SHEETS
	107 of 278
CONTRACT	PROJECT
R-30397	0100701

Not for Construction

12:11:08 PM 8/26/2016 P:\0170190\Plans\PlanProf\17_PP_US27_SB_116.dgn

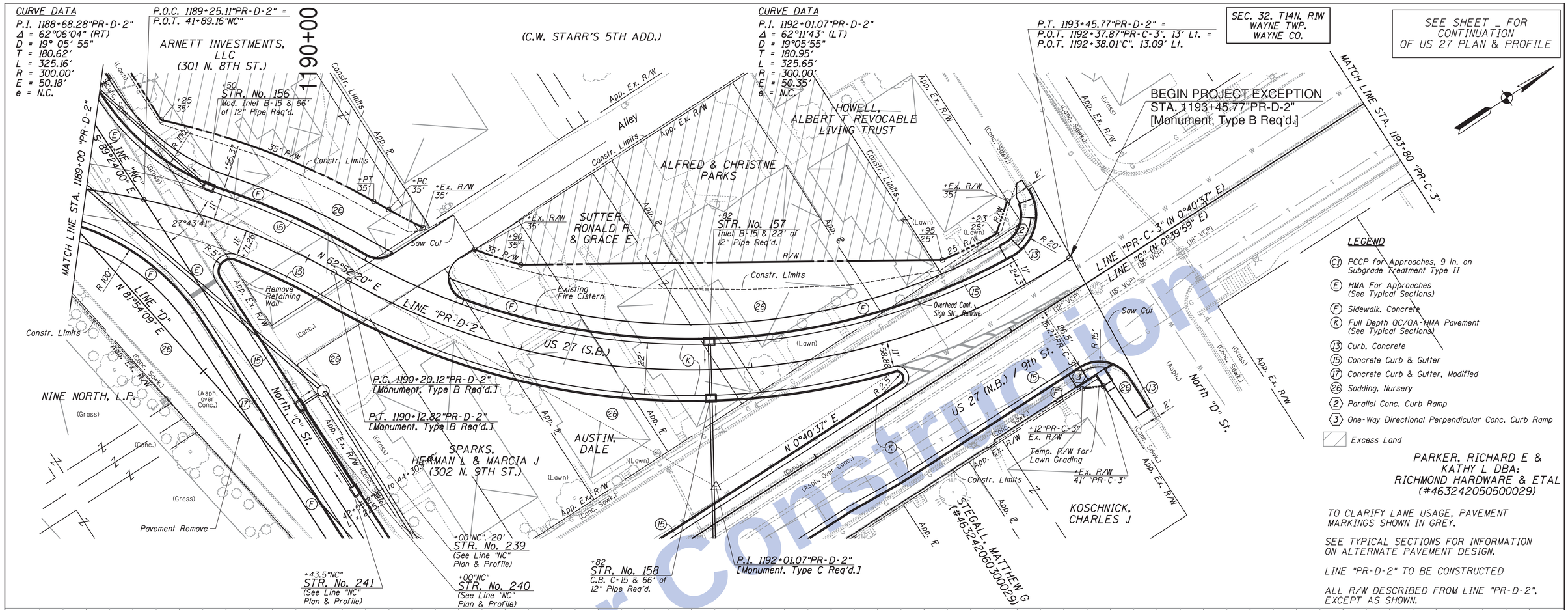

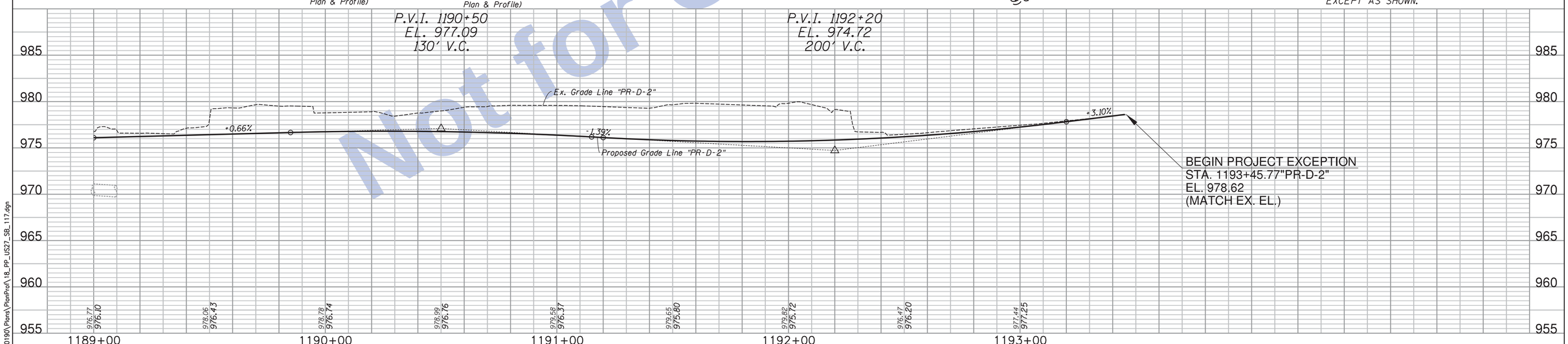

Not for Construction

SEE SHEETS 11 & 12 FOR REFERENCE POINTS

Clark Dietz ENGINEERS

RECOMMENDED FOR APPROVAL _____ DESIGN ENGINEER DATE

DESIGNED: JAL DRAWN: MP
CHECKED: RBI CHECKED: JAL

INDIANA DEPARTMENT OF TRANSPORTATION

PLAN & PROFILE
US 27 SOUTHBOUND

HORIZONTAL SCALE	BRIDGE FILE
1" = 20'	
VERTICAL SCALE	DESIGNATION
1" = 5'	0100701
SURVEY BOOK	SHEETS
	108 of 278
CONTRACT	PROJECT
R-30397	0100701

12:11:10 PM 8/26/2016 P:\0170190\Plans\PlanProf\18_PP_US27_SB_117.dgn

CURVE DATA
P.I. 1199+41.96"C"
Δ = 15° 59' 52" (RT)
D = 2° 00' 15"
T = 401.74'
L = 798.25'
R = 2,858.91'
E = 28.09'
e = N.C.

CURVE DATA
P.I. 1199+44.44"PR-C-3"
Δ = 16°02'33" (RT)
D = 1°58'33"
T = 408.66'
L = 811.98'
R = 2,900.00'
E = 28.65'
e = N.C.

1200+00

SEC. 32. T14N. R1W
WAYNE TWP.
WAYNE CO.

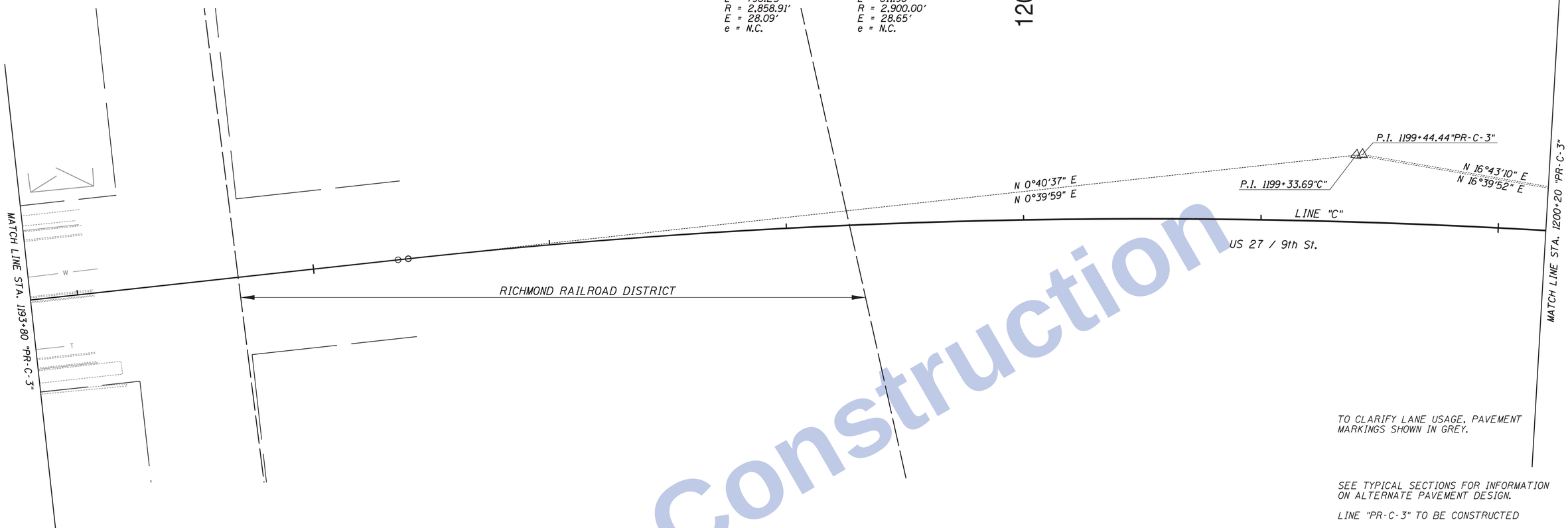

TO CLARIFY LANE USAGE. PAVEMENT MARKINGS SHOWN IN GREY.

SEE TYPICAL SECTIONS FOR INFORMATION ON ALTERNATE PAVEMENT DESIGN.

LINE "PR-C-3" TO BE CONSTRUCTED

ALL R/W DESCRIBED FROM LINE "PR-C-3", EXCEPT AS SHOWN.

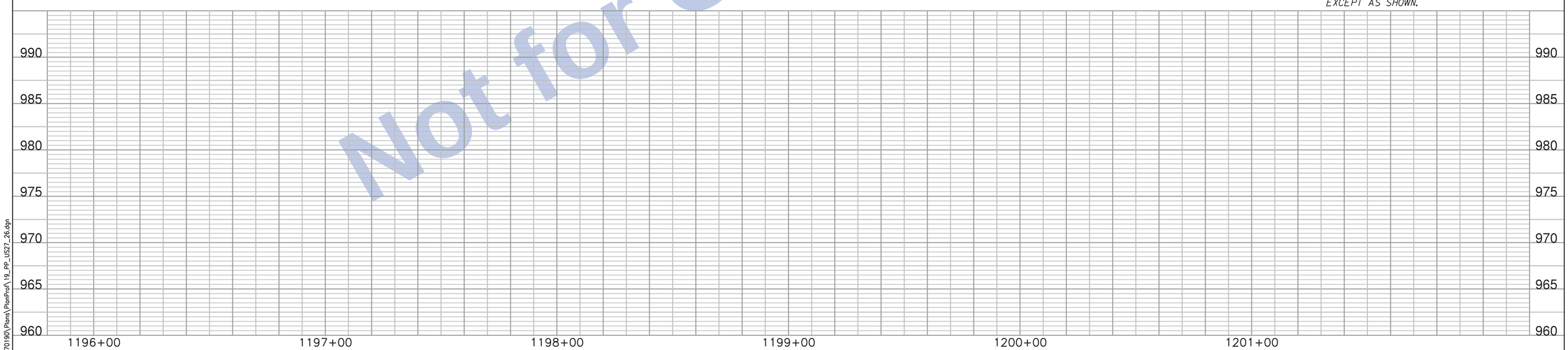

Not for Construction

SEE SHEETS 11 & 12 FOR REFERENCE POINTS

Clark Dietz
ENGINEERS

RECOMMENDED FOR APPROVAL _____ DESIGN ENGINEER DATE

DESIGNED: JAL DRAWN: MP
CHECKED: RBI CHECKED: JAL

INDIANA
DEPARTMENT OF TRANSPORTATION

PLAN & PROFILE
US 27

HORIZONTAL SCALE	BRIDGE FILE
1" = 20'	
VERTICAL SCALE	DESIGNATION
1" = 5'	0100701
SURVEY BOOK	SHEETS
	109 of 278
CONTRACT	PROJECT
R-30397	0100701

12:11:12 PM 8/26/2016 P:\0170190\Plans\PlanProf\19_PP_US27_26.dgn

CURVE DATA	CURVE DATA
P.I. 1199+41.96"C"	P.I. 1199+44.44"PR-C-3"
Δ = 15° 59' 52" (RT)	Δ = 16°02'33" (RT)
D = 2° 00' 15"	D = 1°58'33"
T = 401.74'	T = 408.66'
L = 798.25'	L = 811.98'
R = 2,858.91'	R = 2,900.00'
E = 28.09'	E = 28.65'
e = N.C.	e = N.C.

SEC. 32, T14N, R1W
WAYNE TWP.
WAYNE CO.

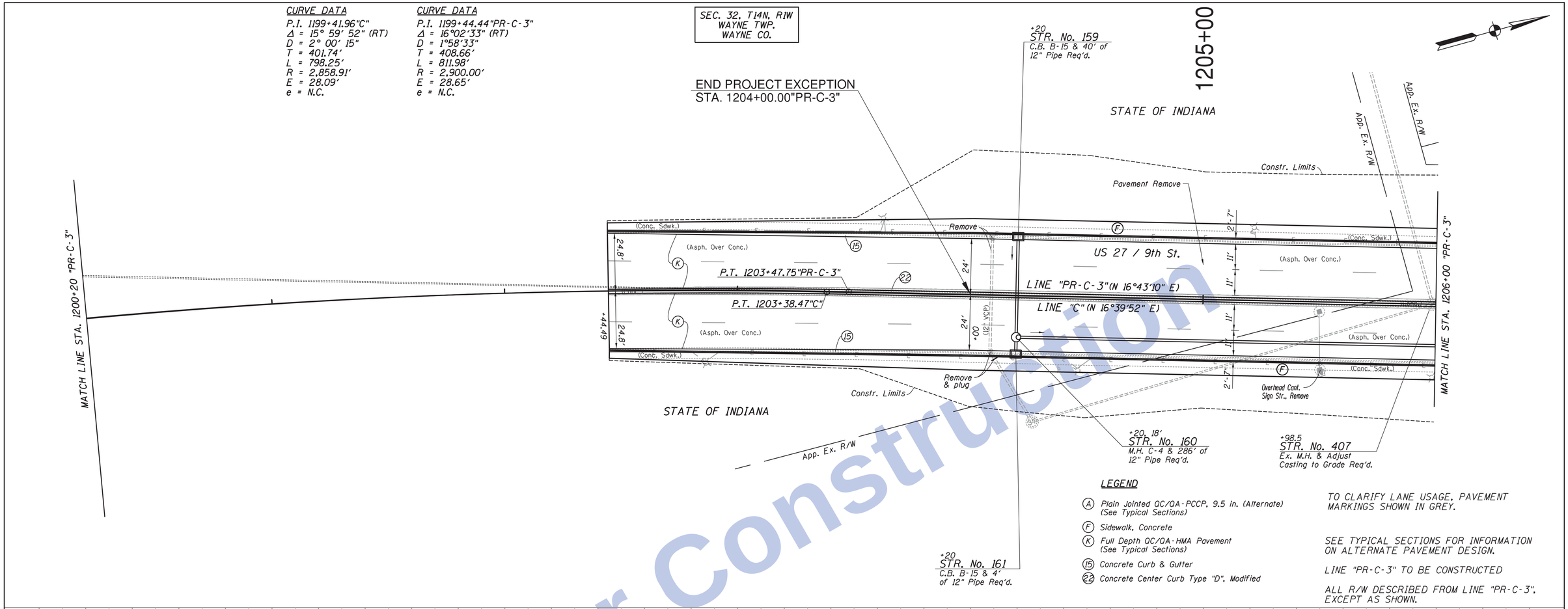

LEGEND

- (A) Plain Jointed QC/QA-PCCP, 9.5 in. (Alternate) (See Typical Sections)
- (F) Sidewalk, Concrete
- (K) Full Depth QC/QA-HMA Pavement (See Typical Sections)
- (15) Concrete Curb & Gutter
- (22) Concrete Center Curb Type "D", Modified

TO CLARIFY LANE USAGE, PAVEMENT MARKINGS SHOWN IN GREY.

SEE TYPICAL SECTIONS FOR INFORMATION ON ALTERNATE PAVEMENT DESIGN.

LINE "PR-C-3" TO BE CONSTRUCTED

ALL R/W DESCRIBED FROM LINE "PR-C-3", EXCEPT AS SHOWN.

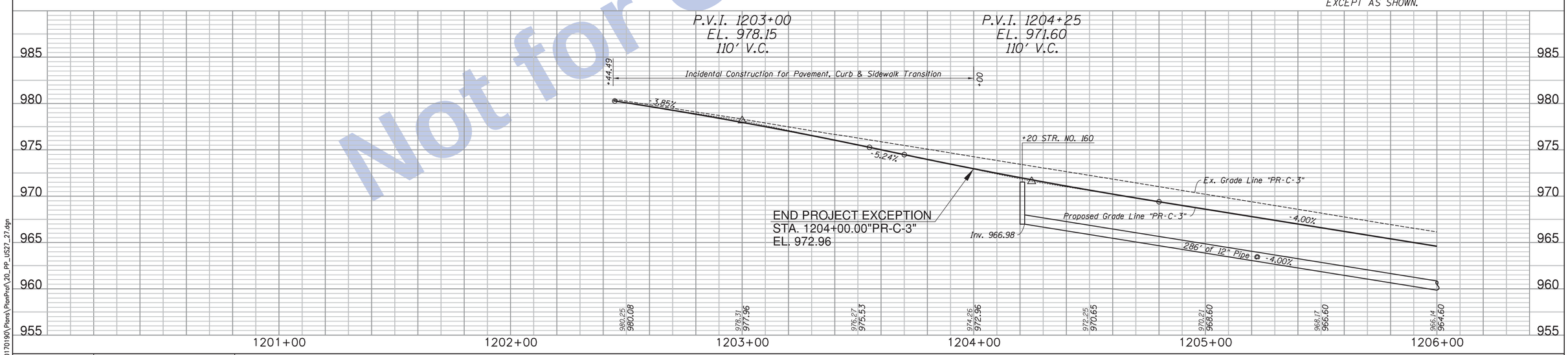

Not for Construction

SEE SHEETS 11 & 12
FOR REFERENCE POINTS

TBM #21: Cut Square S Handrail Walkon to NE Cor. STR. N "F" St. Sta. 1202+26.50"C", 30.49' Rt. Adjusted El. = 981.958

Clark Dietz
ENGINEERS

RECOMMENDED FOR APPROVAL _____ DESIGN ENGINEER DATE

DESIGNED: JAL DRAWN: MP
CHECKED: RBI CHECKED: JAL

INDIANA
DEPARTMENT OF TRANSPORTATION

PLAN & PROFILE
US 27

HORIZONTAL SCALE	BRIDGE FILE
1" = 20'	
VERTICAL SCALE	DESIGNATION
1" = 5'	0100701
SURVEY BOOK	SHEETS
	110 of 278
CONTRACT	PROJECT
R-30397	0100701

12:11:14 PM 8/26/2016 P:\0170190\Plans\PlanProf\20_PP_US27_27.dgn

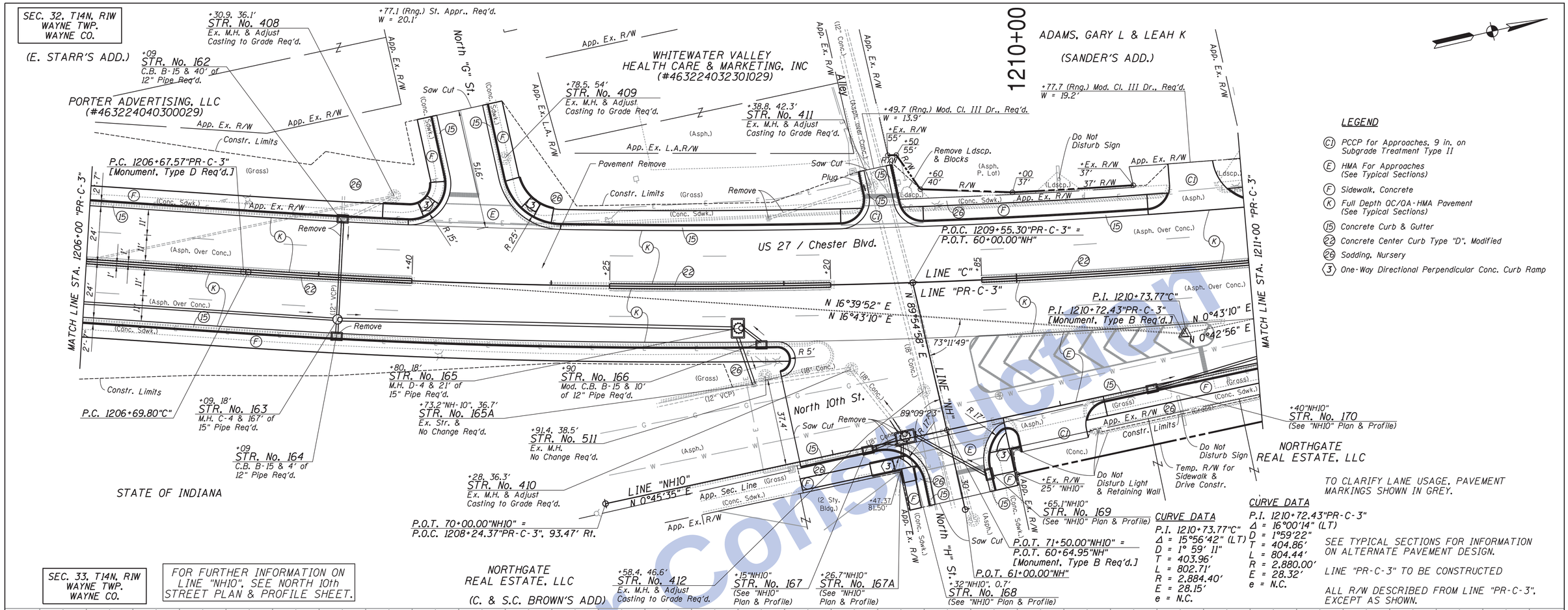

LEGEND

- (CI) PCCP for Approaches, 9 in. on Subgrade Treatment Type II
- (E) HMA For Approaches (See Typical Sections)
- (F) Sidewalk, Concrete
- (K) Full Depth QC/QA-HMA Pavement (See Typical Sections)
- (15) Concrete Curb & Gutter
- (22) Concrete Center Curb Type "D", Modified
- (26) Sodding, Nursery
- (3) One-Way Directional Perpendicular Conc. Curb Ramp

TO CLARIFY LANE USAGE, PAVEMENT MARKINGS SHOWN IN GREY.

SEE TYPICAL SECTIONS FOR INFORMATION ON ALTERNATE PAVEMENT DESIGN.

LINE "PR-C-3" TO BE CONSTRUCTED

ALL R/W DESCRIBED FROM LINE "PR-C-3", EXCEPT AS SHOWN.

CURVE DATA

P.I. 1210+73.77"C"
Δ = 15°56'42" (LT)
D = 1° 59' 11"
T = 403.96'
L = 802.71'
R = 2,884.40'
E = 28.15'
e = N.C.

CURVE DATA

P.I. 1210+72.43"PR-C-3"
Δ = 16°00'14" (LT)
D = 1°59'22"
T = 404.86'
L = 804.44'
R = 2,880.00'
E = 28.32'
e = N.C.

SEE SHEETS 11 & 12 FOR REFERENCE POINTS

TBM #22: Cut "X" W Bolt F. Hyd. 150' S N "H" St. Sta. 1208+20.62"C". 97.44' Rt. Adjusted El. = 955.441

Clark Dietz ENGINEERS

RECOMMENDED FOR APPROVAL _____ DESIGN ENGINEER DATE

DESIGNED: JAL | DRAWN: MP
CHECKED: RBI | CHECKED: JAL

INDIANA DEPARTMENT OF TRANSPORTATION

PLAN & PROFILE
US 27

HORIZONTAL SCALE	BRIDGE FILE
1" = 20'	
VERTICAL SCALE	DESIGNATION
1" = 5'	0100701
SURVEY BOOK	SHEETS
	111 of 278
CONTRACT	PROJECT
R-30397	0100701

12:11:15 PM 8/26/2016 P:\0170190\Plans\PlanProf\21_PP_US27_28.dgn

Not for Construction

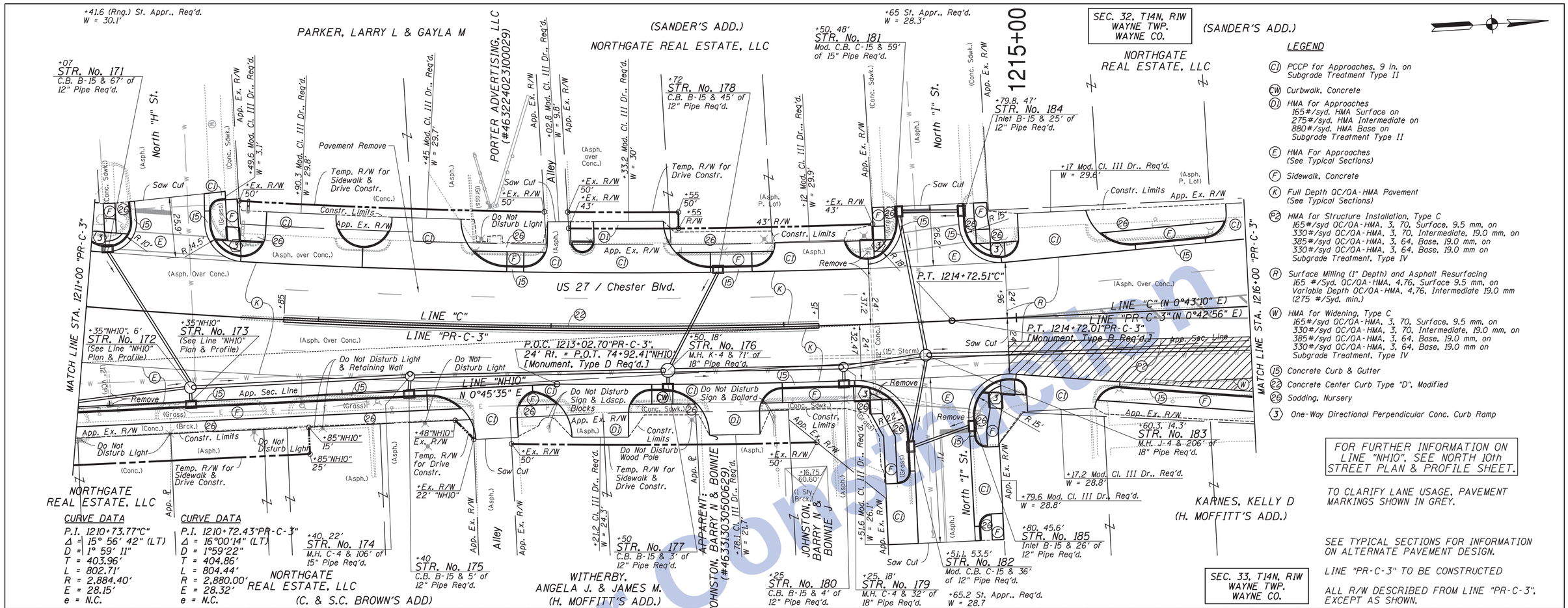

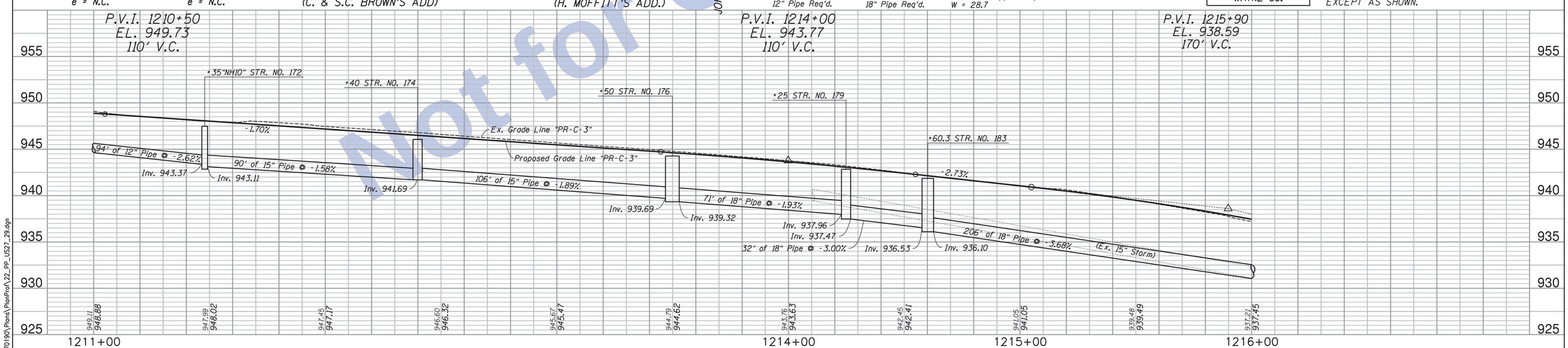

SEE SHEETS 11 & 12 FOR REFERENCE POINTS

Clark Dietz ENGINEERS

RECOMMENDED FOR APPROVAL _____ DESIGN ENGINEER DATE

DESIGNED: JAL DRAWN: MP
CHECKED: RBI CHECKED: JAL

INDIANA DEPARTMENT OF TRANSPORTATION

PLAN & PROFILE
US 27

HORIZONTAL SCALE	BRIDGE FILE
1" = 20'	
VERTICAL SCALE	DESIGNATION
1" = 5'	0100701
SURVEY BOOK	SHEETS
	112 of 278
CONTRACT	PROJECT
R-30397	0100701

12:11:17 PM 8/26/2016 P:\0170190\Plans\PlanProf\22_PP_US27_29.dgn

Not for Construction

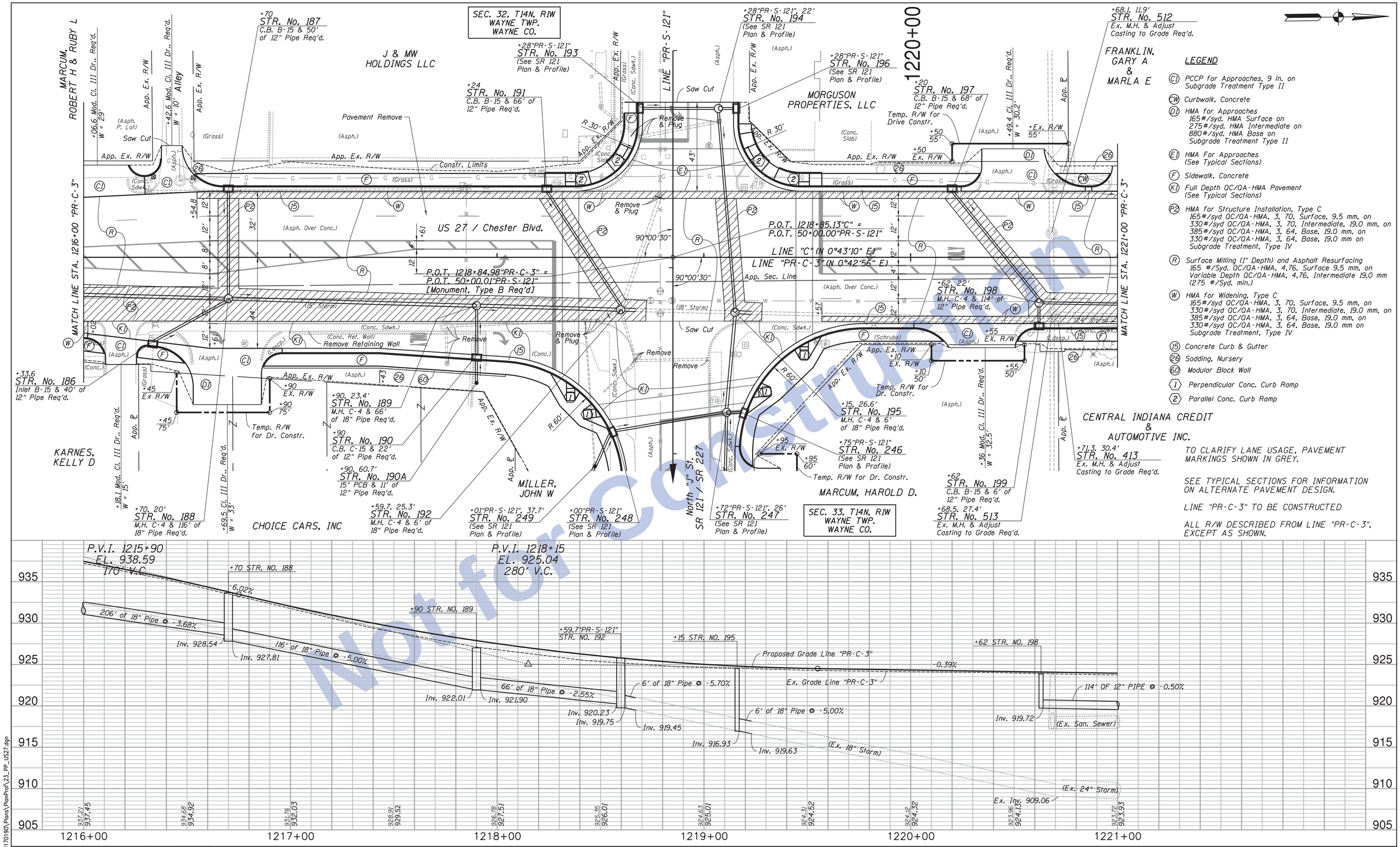

SEE SHEETS 11 & 12 FOR REFERENCE POINTS

Clark Dietz ENGINEERS

RECOMMENDED FOR APPROVAL _____ DESIGN ENGINEER DATE

DESIGNED: JAL DRAWN: MP
CHECKED: RBI CHECKED: JAL

INDIANA DEPARTMENT OF TRANSPORTATION

PLAN & PROFILE
US 27

HORIZONTAL SCALE	BRIDGE FILE
1" = 20'	
VERTICAL SCALE	DESIGNATION
1" = 5'	0100701
SURVEY BOOK	SHEETS
	113 of 278
CONTRACT	PROJECT
R-30397	0100701

Not for Construction

12:11:19 PM 8/26/2016 P:\0170190\Plans\PlanProf\23_PP_US27.dgn

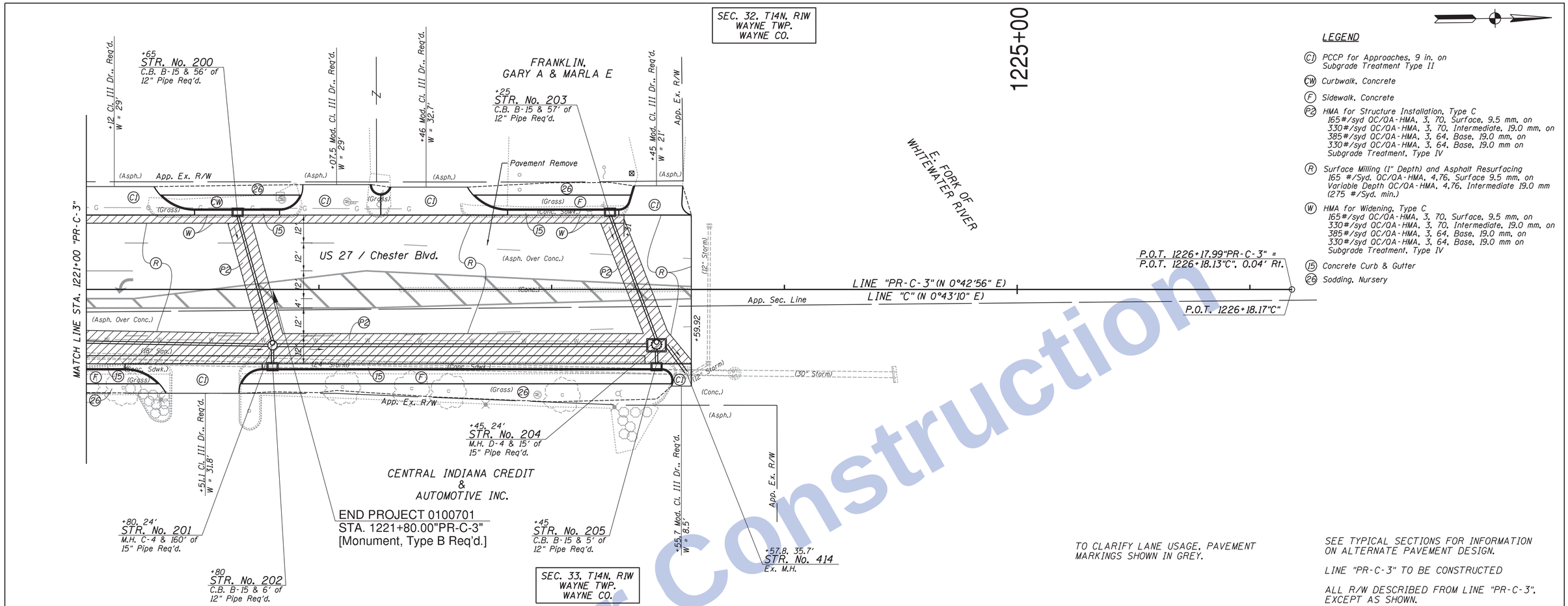

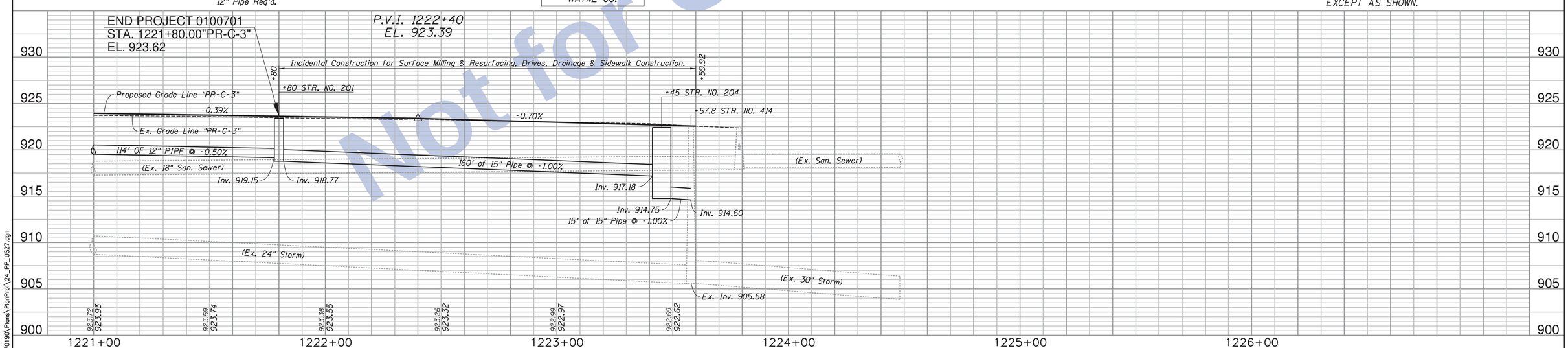

Not for Construction

SEE SHEETS 11 & 12
FOR REFERENCE POINTS

Clark Dietz
ENGINEERS

RECOMMENDED FOR APPROVAL _____ DESIGN ENGINEER DATE

DESIGNED: JAL | DRAWN: MP
CHECKED: RBI | CHECKED: JAL

INDIANA
DEPARTMENT OF TRANSPORTATION

PLAN & PROFILE
US 27

HORIZONTAL SCALE	BRIDGE FILE
1" = 20'	
VERTICAL SCALE	DESIGNATION
1" = 5'	0100701
SURVEY BOOK	SHEETS
	114 of 278
CONTRACT	PROJECT
R-30397	0100701

12:11:21 PM 8/26/2016 P:\0170190\Plans\PlanProf\24_PP_US27.dgn

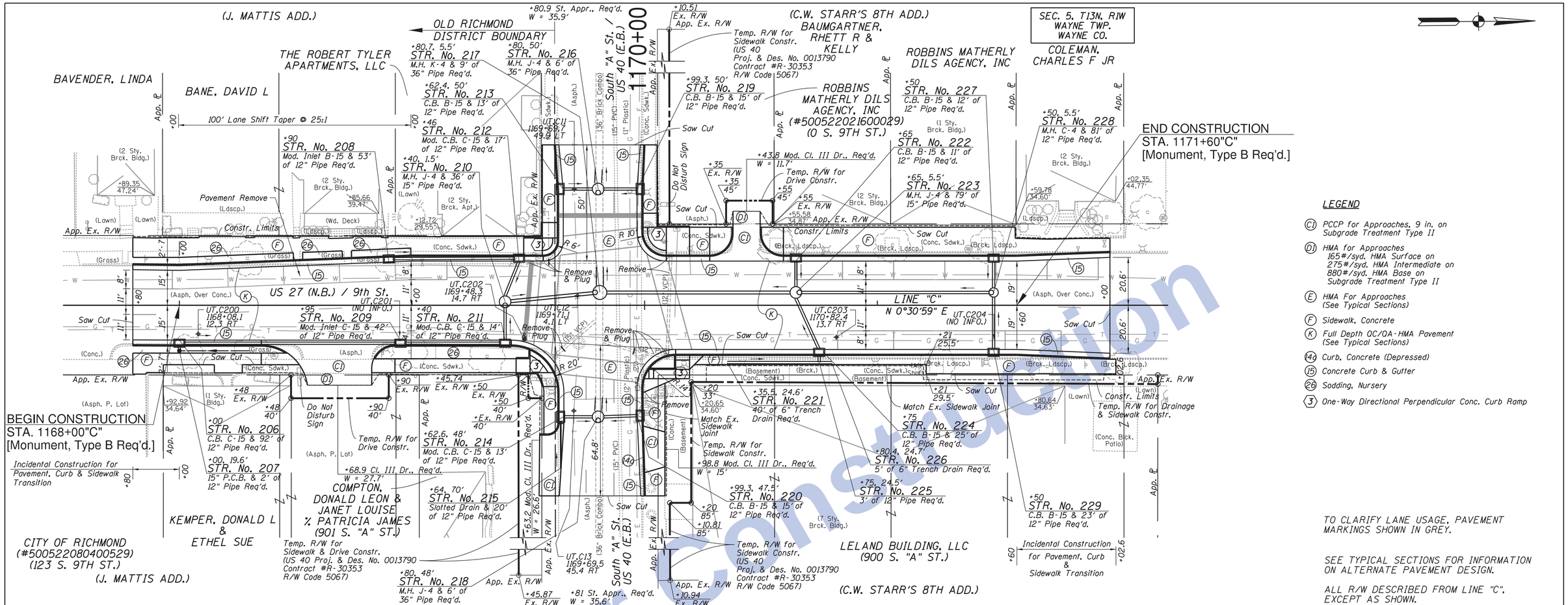

LEGEND

- (C1) PCCP for Approaches, 9 in. on Subgrade Treatment Type II
- (D1) HMA for Approaches 165#/syd. HMA Surface on 275#/syd. HMA Intermediate on 880#/syd. HMA Base on Subgrade Treatment Type II
- (E) HMA For Approaches (See Typical Sections)
- (F) Sidewalk, Concrete
- (K) Full Depth QC/QA-HMA Pavement (See Typical Sections)
- (14a) Curb, Concrete (Depressed)
- (15) Concrete Curb & Gutter
- (26) Sodding, Nursery
- (3) One-Way Directional Perpendicular Conc. Curb Ramp

TO CLARIFY LANE USAGE, PAVEMENT MARKINGS SHOWN IN GREY.

SEE TYPICAL SECTIONS FOR INFORMATION ON ALTERNATE PAVEMENT DESIGN.

ALL R/W DESCRIBED FROM LINE "C", EXCEPT AS SHOWN.

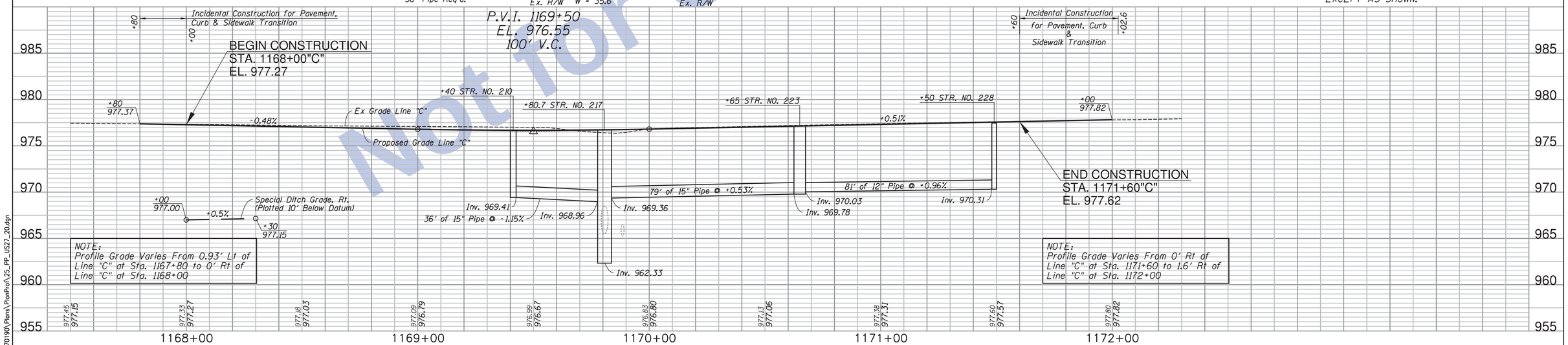

SEE SHEETS 11 & 12 FOR REFERENCE POINTS

TBM #18: Cut "X" E Bolt F. Hyd. @ Cor. US 40 EB Sta. 1170+19.65"C", 23.99' Lt. Adjusted El. = 978.824

Clark Dietz ENGINEERS

RECOMMENDED FOR APPROVAL _____ DESIGN ENGINEER DATE

DESIGNED: JAL DRAWN: MP
CHECKED: RBI CHECKED: JAL

INDIANA DEPARTMENT OF TRANSPORTATION

PLAN & PROFILE
US 27 NORTHBOUND

HORIZONTAL SCALE	BRIDGE FILE
1" = 20'	
VERTICAL SCALE	DESIGNATION
1" = 5'	0100701
SURVEY BOOK	SHEETS
	115 of 278
CONTRACT	PROJECT
R-30397	0100701

12:11:23 PM 8/26/2016 P:\0170190\Plans\PlanProf\25_PP_US27_20.dgn

Not for Construction

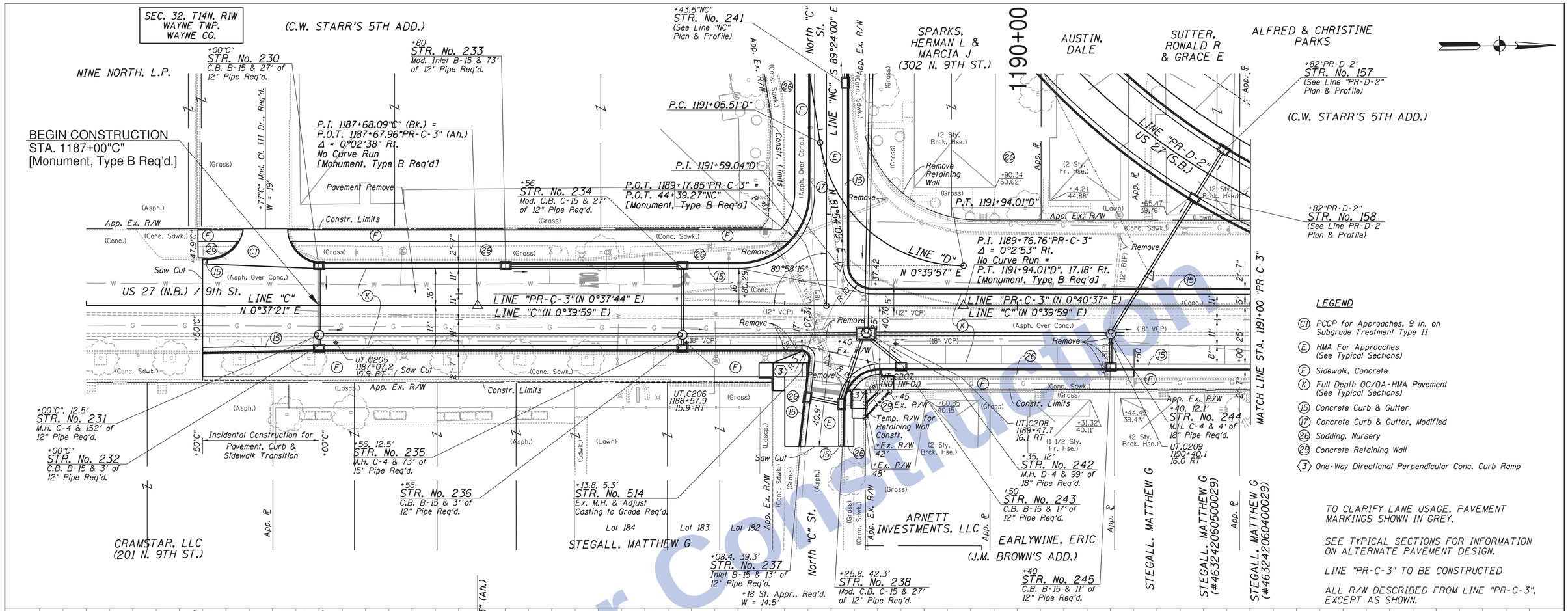

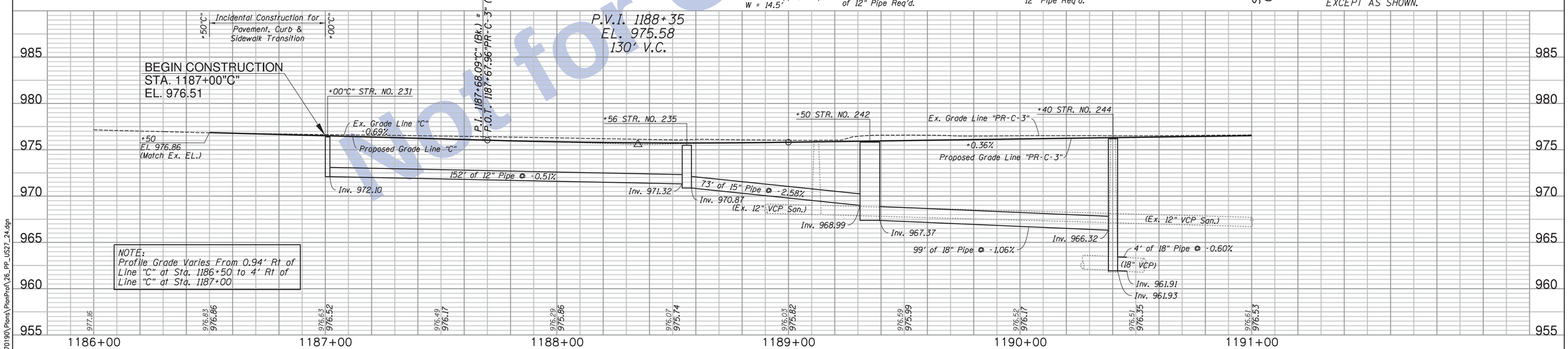

Not for Construction

SEE SHEETS 11 & 12 FOR REFERENCE POINTS

TBM #20: Bt. Spk. Set S Side of 48" Sycamore @ N "C" St. Sta. 1189+25.41"C", 72.27' Rt. Adjusted El. = 977.599

Clark Dietz ENGINEERS

RECOMMENDED FOR APPROVAL _____ DESIGN ENGINEER DATE

DESIGNED: JAL DRAWN: MP
CHECKED: RBI CHECKED: JAL

INDIANA DEPARTMENT OF TRANSPORTATION

PLAN & PROFILE
US 27 NORTHBOUND

HORIZONTAL SCALE	BRIDGE FILE
1" = 20'	
VERTICAL SCALE	DESIGNATION
1" = 5'	0100701
SURVEY BOOK	SHEETS
	116 of 278
CONTRACT	PROJECT
R-30397	0100701

12:11:25 PM 8/26/2016 P:\0170190\Plans\PlanProf\26_PP_US27_24.dgn

SEC. 32, T14N, R1W
WAYNE TWP.
WAYNE CO.

1195+00

CURVE DATA
P.I. 1199+44.44"PR-C-3"
Δ = 16°02'33" (RT)
D = 1°58'33"
T = 408.66'
L = 811.98'
R = 2,900.00'
E = 28.65'
e = N.C.

LEGEND
- (F) Sidewalk, Concrete
- (K) Full Depth OC/OA-HMA Pavement (See Typical Sections)
- (14) Curb, Concrete
- (15) Concrete Curb & Gutter
- (26) Sodding, Nursery
- (2) Parallel Conc. Curb Ramp
- (3) One-Way Directional Perpendicular Conc. Curb Ramp
- Excess Land

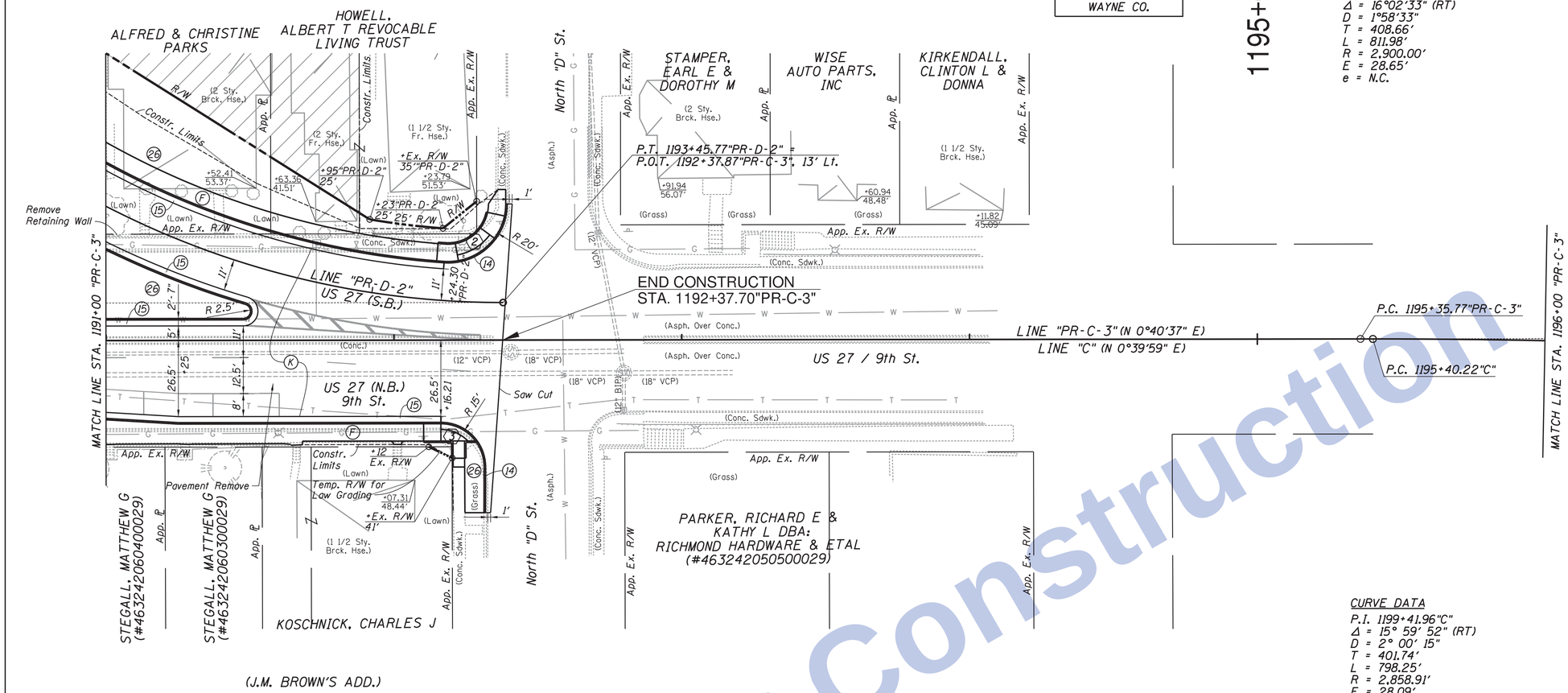

CURVE DATA
P.I. 1199+41.96"C"
Δ = 15° 59' 52" (RT)
D = 2° 00' 15"
T = 401.74'
L = 798.25'
R = 2,858.91'
E = 28.09'
e = N.C.

TO CLARIFY LANE USAGE, PAVEMENT MARKINGS SHOWN IN GREY.

SEE TYPICAL SECTIONS FOR INFORMATION ON ALTERNATE PAVEMENT DESIGN.

LINE "PR-C-3" TO BE CONSTRUCTED

ALL R/W DESCRIBED FROM LINE "PR-C-3", EXCEPT AS SHOWN.

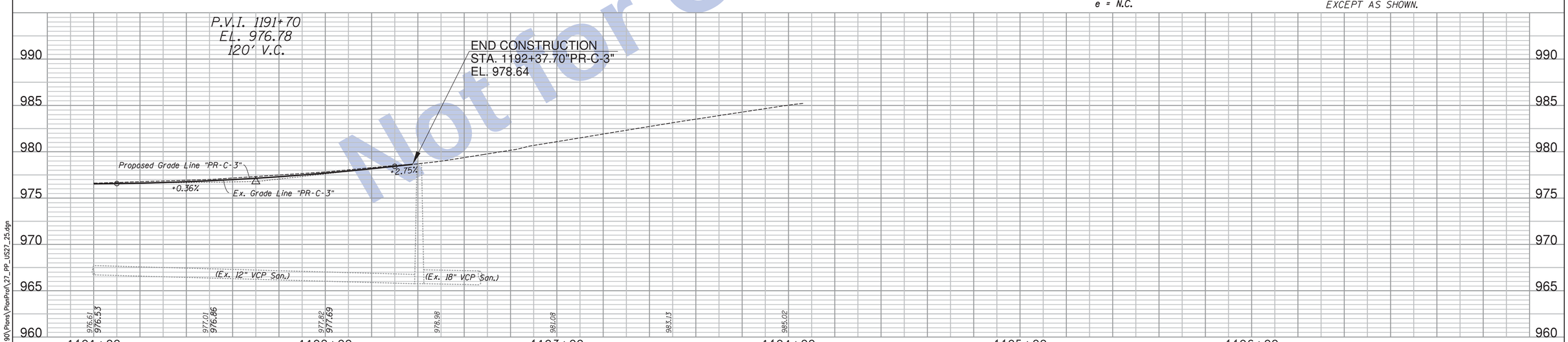

Not for Construction

SEE SHEETS 11 & 12 FOR REFERENCE POINTS

Clark Dietz ENGINEERS

RECOMMENDED FOR APPROVAL _____ DESIGN ENGINEER DATE

DESIGNED: JAL DRAWN: MP
CHECKED: RBI CHECKED: JAL

INDIANA DEPARTMENT OF TRANSPORTATION

PLAN & PROFILE
US 27 NORTHBOUND

HORIZONTAL SCALE	BRIDGE FILE
1" = 20'	
VERTICAL SCALE	DESIGNATION
1" = 5'	0100701
SURVEY BOOK	SHEETS
	117 of 278
CONTRACT	PROJECT
R-30397	0100701

12:11:26 PM 8/26/2016 P:\0170190\Plans\PlanProf\27_PP_US27_25.dgn

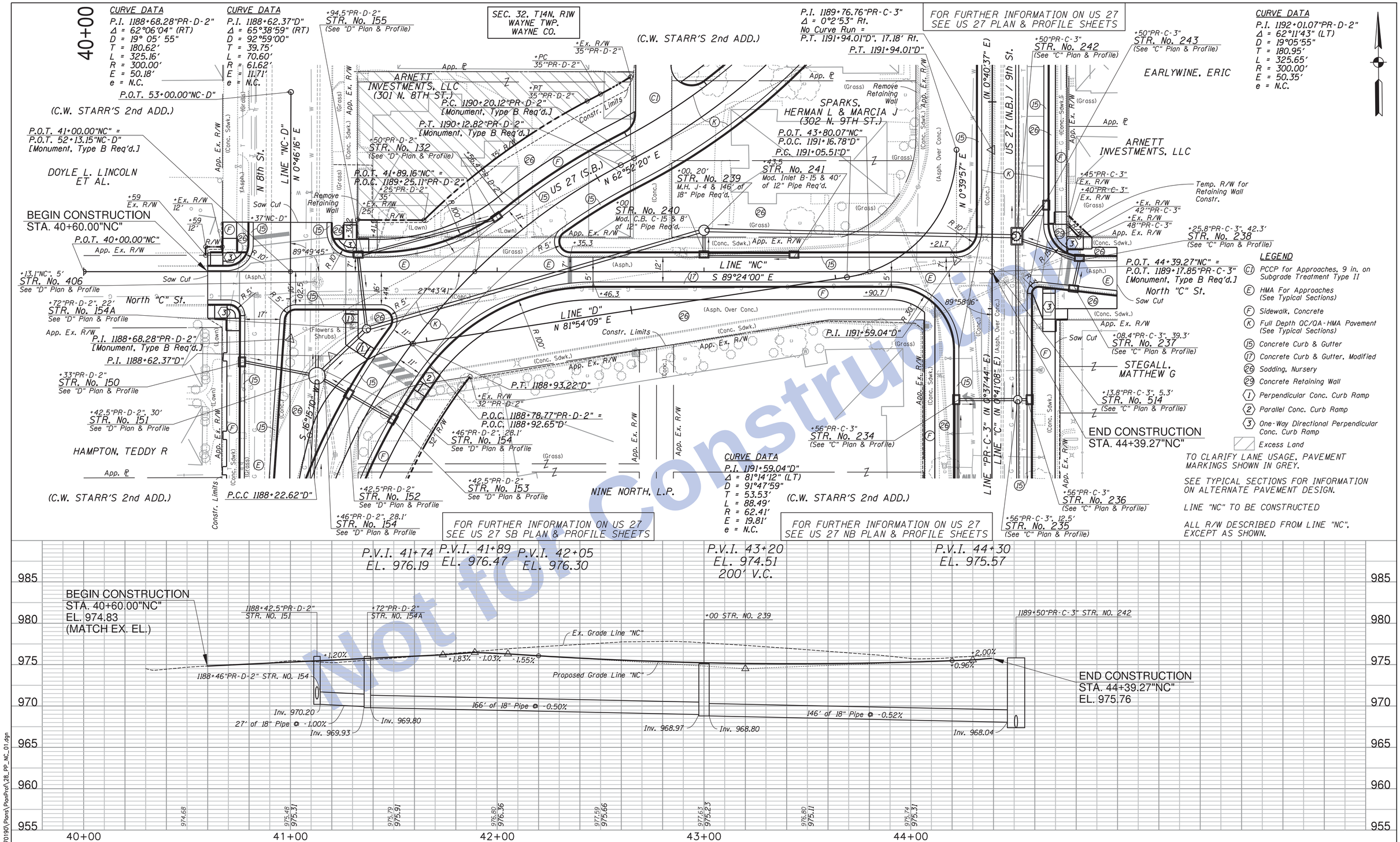

Not for Construction

SEE SHEETS 11 & 12
FOR REFERENCE POINTS

Clark Dietz
ENGINEERS

RECOMMENDED FOR APPROVAL _____ DESIGN ENGINEER DATE

DESIGNED: JAL | DRAWN: MP
CHECKED: RBI | CHECKED: JAL

INDIANA
DEPARTMENT OF TRANSPORTATION

PLAN & PROFILE
N C STREET

HORIZONTAL SCALE	BRIDGE FILE
1" = 20'	
VERTICAL SCALE	DESIGNATION
1" = 5'	0100701
SURVEY BOOK	SHEETS
	118 of 278
CONTRACT	PROJECT
R-30397	0100701

12:11:28 PM 8/26/2016 P:\0170190\Plans\PlanProf\28_PP_NC_01.dgn

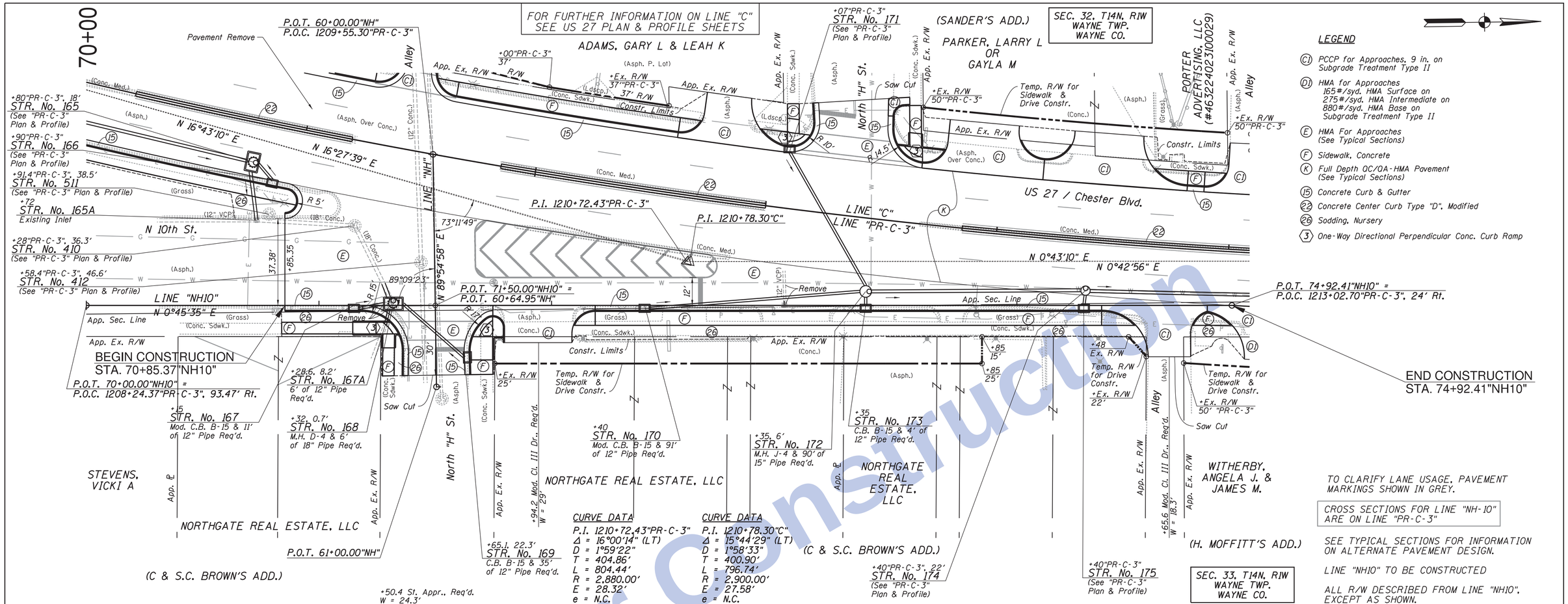

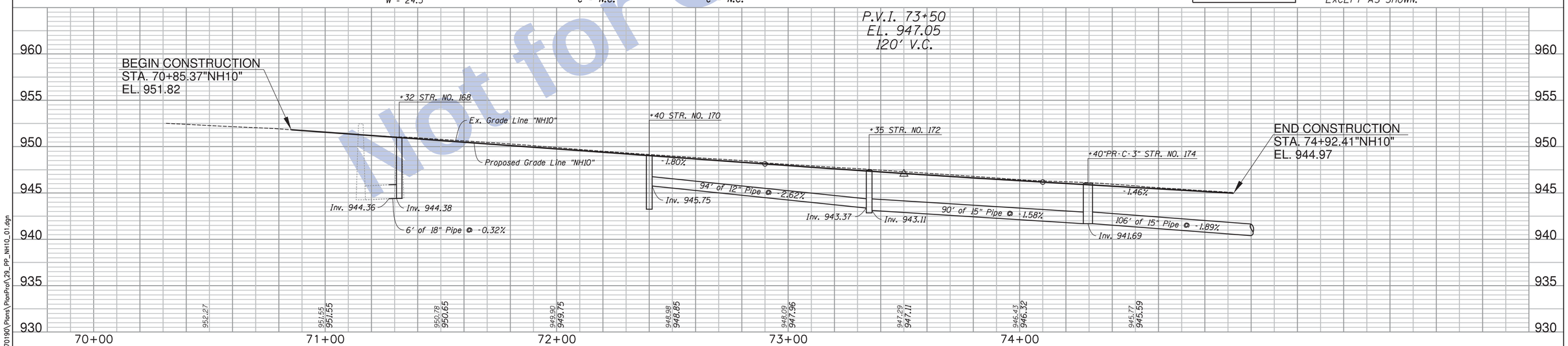

SEE SHEETS 11 & 12 FOR REFERENCE POINTS

Clark Dietz ENGINEERS

RECOMMENDED FOR APPROVAL _____ DESIGN ENGINEER DATE

DESIGNED: JAL DRAWN: MP
CHECKED: RBI CHECKED: JAL

INDIANA DEPARTMENT OF TRANSPORTATION

PLAN & PROFILE
N 10th STREET

HORIZONTAL SCALE	BRIDGE FILE
1" = 20'	
VERTICAL SCALE	DESIGNATION
1" = 5'	0100701
SURVEY BOOK	SHEETS
	119 of 278
CONTRACT	PROJECT
R-30397	0100701

12:11:30 PM 8/26/2016 P:\0170190\Plans\PlanProf\29_PP_NH10_01.dgn

Not for Construction

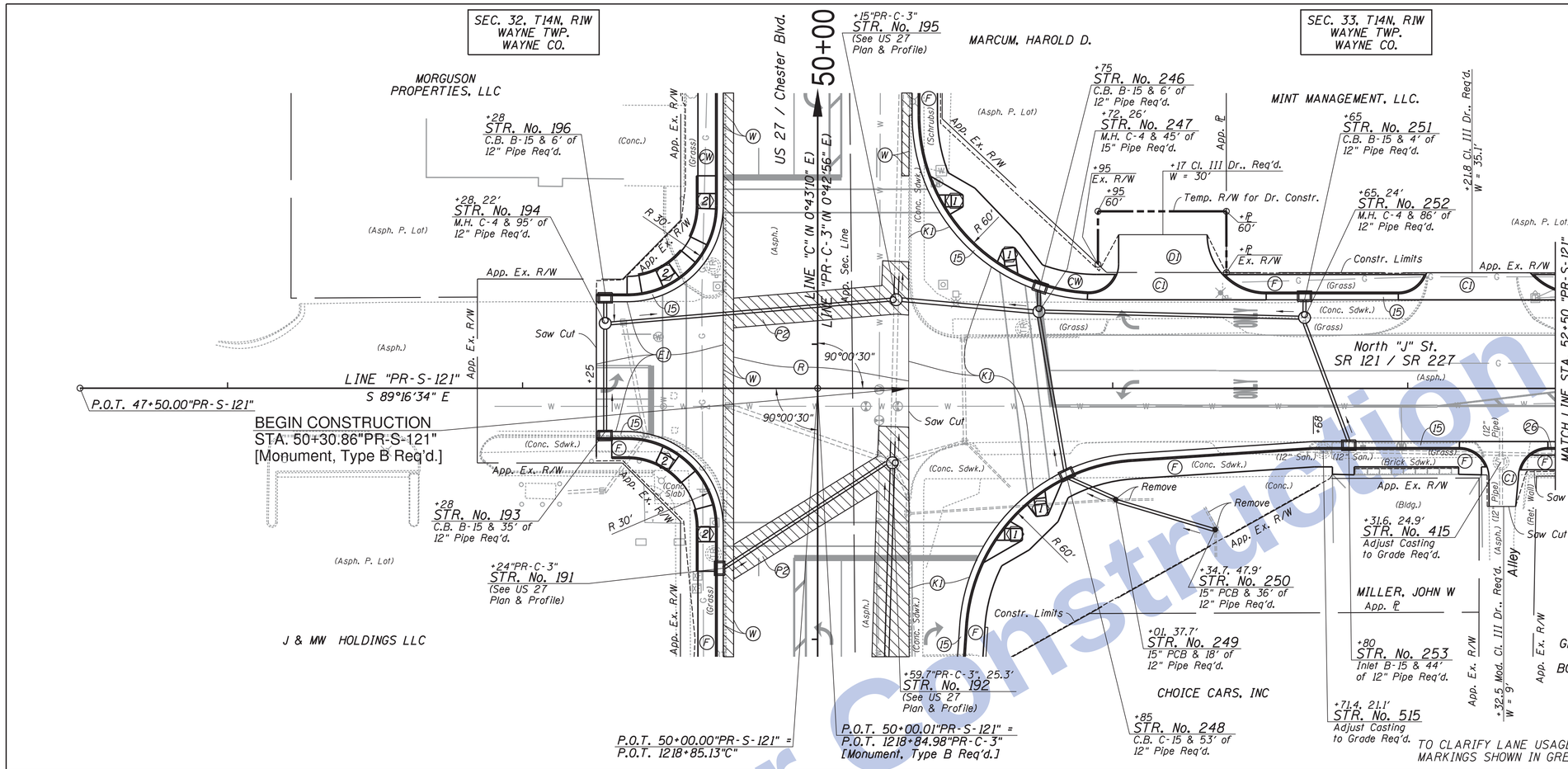

LEGEND

- (C1) PCCP for Approaches, 9 in. on Subgrade Treatment Type II
- (CW) Curb Walk, Concrete
- (D1) HMA for Approaches 165#/syd. HMA Surface on 275#/syd. HMA Intermediate on 880#/syd. HMA Base on Subgrade Treatment Type II
- (E1) HMA For Approaches (See Typical Sections)
- (F) Sidewalk, Concrete
- (K1) Full Depth QC/QA-HMA Pavement (See Typical Sections)
- (P2) HMA for Structure Installation, Type C 165#/syd QC/QA-HMA, 3, 70, Surface, 9.5 mm, on 330#/syd QC/QA-HMA, 3, 70, Intermediate, 19.0 mm, on 385#/syd QC/QA-HMA, 3, 64, Base, 19.0 mm, on 330#/syd QC/QA-HMA, 3, 64, Base, 19.0 mm on Subgrade Treatment, Type IV
- (R) Surface Milling (1" Depth) and Asphalt Resurfacing 165 #/Syd. QC/QA-HMA, 4.76, Surface 9.5 mm, on Variable Depth QC/QA-HMA, 4.76, Intermediate 19.0 mm (275 #/Syd. min.)
- (W) HMA for Widening, Type C 165#/syd QC/QA-HMA, 3, 70, Surface, 9.5 mm, on 330#/syd QC/QA-HMA, 3, 70, Intermediate, 19.0 mm, on 385#/syd QC/QA-HMA, 3, 64, Base, 19.0 mm, on 330#/syd QC/QA-HMA, 3, 64, Base, 19.0 mm on Subgrade Treatment, Type IV
- (15) Concrete Curb & Gutter
- (26) Sodding, Nursery
- (1) Perpendicular Conc. Curb Ramp
- (2) Parallel Conc. Curb Ramp

SEE TYPICAL SECTIONS FOR INFORMATION ON ALTERNATE PAVEMENT DESIGN.

LINE "PR-S-121" TO BE CONSTRUCTED

ALL R/W DESCRIBED FROM LINE "PR-S-121", EXCEPT AS SHOWN.

TO CLARIFY LANE USAGE, PAVEMENT MARKINGS SHOWN IN GREY.

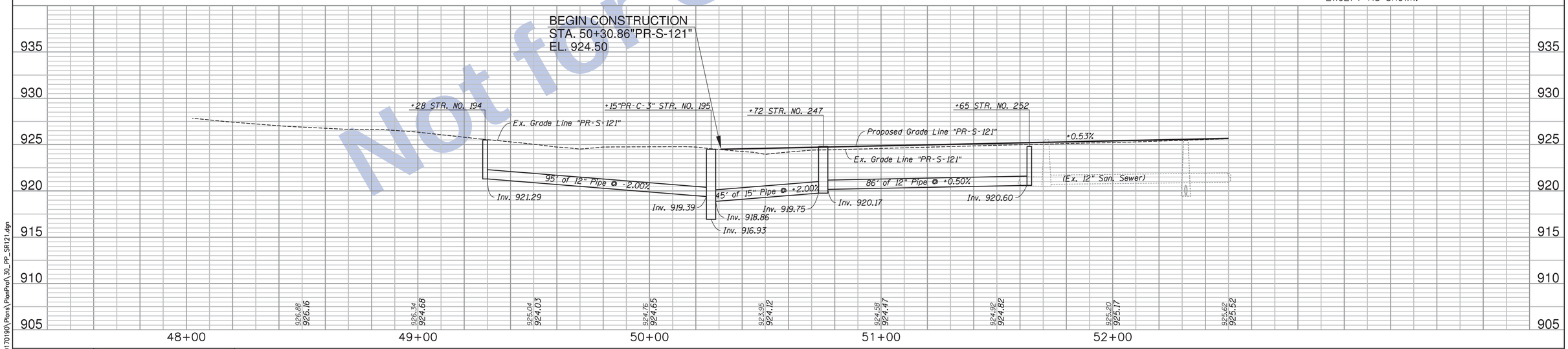

SEE SHEETS 11 & 12 FOR REFERENCE POINTS

Clark Dietz ENGINEERS

RECOMMENDED FOR APPROVAL _____ DESIGN ENGINEER DATE

DESIGNED: JAL DRAWN: MP
CHECKED: RBI CHECKED: JAL

INDIANA DEPARTMENT OF TRANSPORTATION

PLAN & PROFILE
SR 121

HORIZONTAL SCALE	BRIDGE FILE
1" = 20'	
VERTICAL SCALE	DESIGNATION
1" = 5'	0100701
SURVEY BOOK	SHEETS
	120 of 278
CONTRACT	PROJECT
R-30397	0100701

12:11:32 PM 8/26/2016 P:\0170190\Plans\PlanProf_30_PP_SR121.dgn

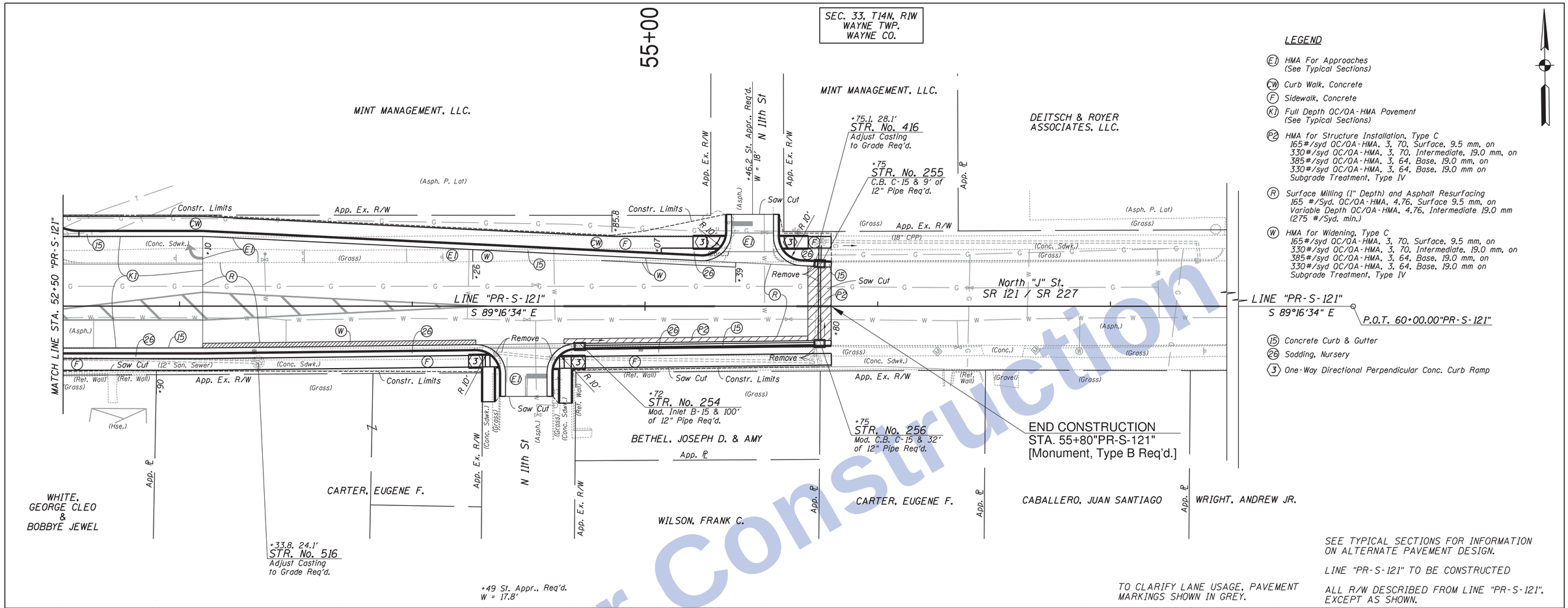

LEGEND

- (E1) HMA For Approaches (See Typical Sections)
- (CW) Curb Walk, Concrete
- (F) Sidewalk, Concrete
- (K1) Full Depth QC/QA-HMA Pavement (See Typical Sections)
- (P2) HMA for Structure Installation, Type C
  165#/syd QC/QA-HMA, 3, 70, Surface, 9.5 mm, on
  330#/syd QC/QA-HMA, 3, 70, Intermediate, 19.0 mm, on
  385#/syd QC/QA-HMA, 3, 64, Base, 19.0 mm, on
  330#/syd QC/QA-HMA, 3, 64, Base, 19.0 mm on
  Subgrade Treatment, Type IV
- (R) Surface Milling (1" Depth) and Asphalt Resurfacing
  165 #/Syd. QC/QA-HMA, 4.76, Surface 9.5 mm, on
  Variable Depth QC/QA-HMA, 4.76, Intermediate 19.0 mm
  (275 #/Syd. min.)
- (W) HMA for Widening, Type C
  165#/syd QC/QA-HMA, 3, 70, Surface, 9.5 mm, on
  330#/syd QC/QA-HMA, 3, 70, Intermediate, 19.0 mm, on
  385#/syd QC/QA-HMA, 3, 64, Base, 19.0 mm, on
  330#/syd QC/QA-HMA, 3, 64, Base, 19.0 mm on
  Subgrade Treatment, Type IV
- (15) Concrete Curb & Gutter
- (26) Sodding, Nursery
- (3) One-Way Directional Perpendicular Conc. Curb Ramp

SEE TYPICAL SECTIONS FOR INFORMATION ON ALTERNATE PAVEMENT DESIGN.

LINE "PR-S-121" TO BE CONSTRUCTED

ALL R/W DESCRIBED FROM LINE "PR-S-121", EXCEPT AS SHOWN.

TO CLARIFY LANE USAGE, PAVEMENT MARKINGS SHOWN IN GREY.

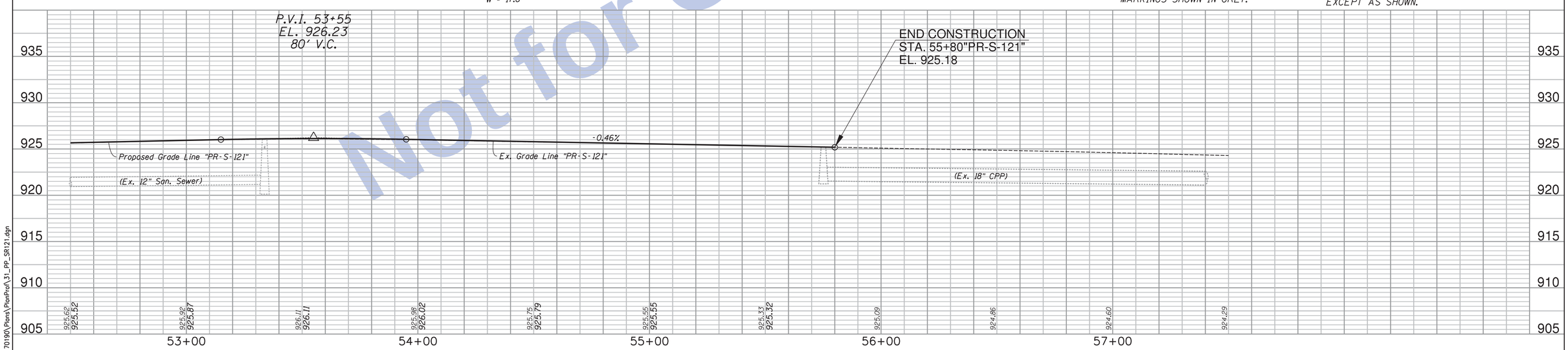

Not for Construction

SEE SHEETS 11 & 12
FOR REFERENCE POINTS

Clark Dietz
ENGINEERS

RECOMMENDED FOR APPROVAL _____ DESIGN ENGINEER DATE

DESIGNED: JAL | DRAWN: MP
CHECKED: RBI | CHECKED: JAL

INDIANA
DEPARTMENT OF TRANSPORTATION

PLAN & PROFILE
SR 121

HORIZONTAL SCALE	BRIDGE FILE
1" = 20'	
VERTICAL SCALE	DESIGNATION
1" = 5'	0100701
SURVEY BOOK	SHEETS
	121 of 278
CONTRACT	PROJECT
R-30397	0100701

12:11:34 PM 8/26/2016 P:\0170190\Plans\PlanProf\31_PP_SR121.dgn

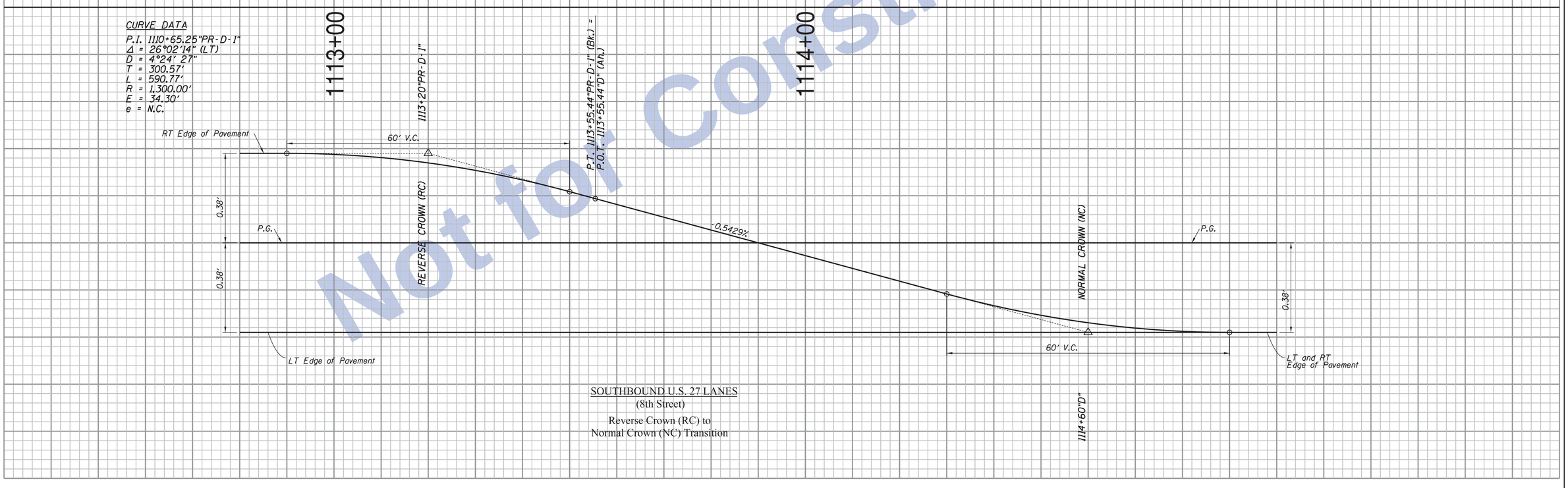

SOUTHBOUND U.S. 27 LANES
(8th Street)
Reverse Crown (RC) to
Normal Crown (NC) Transition

Not for Construction

Clark Dietz
ENGINEERS

RECOMMENDED FOR APPROVAL ____ DESIGN ENGINEER DATE	INDIANA DEPARTMENT OF TRANSPORTATION	HORIZONTAL SCALE 1" = 10'	BRIDGE FILE
		VERTICAL SCALE 1" = 50'	DESIGNATION 0100701
DESIGNED: JAL / DRAWN: MP	PAVEMENT TRANSITION DIAGRAM US 27	SURVEY BOOK	SHEETS 122 of 278
CHECKED: RBI / CHECKED: JAL		CONTRACT R-30397	PROJECT 0100701

12:11:35 PM 8/26/2016 P:\0170190\Plans\Misc\SE01_US27_01.dgn

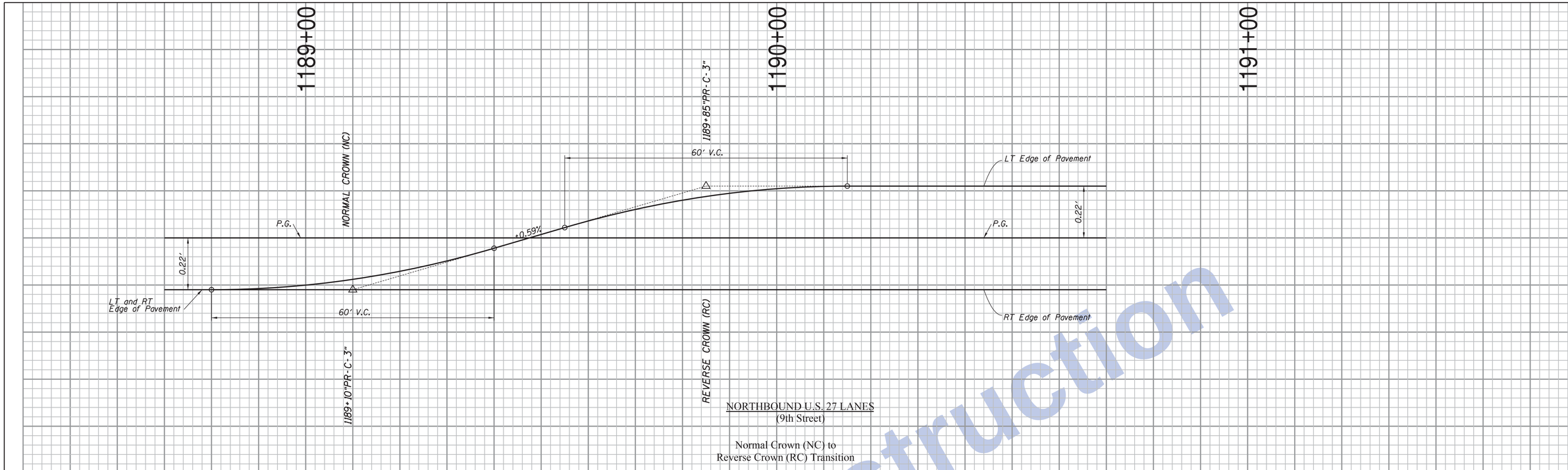

NORTHBOUND U.S. 27 LANES
(9th Street)

Normal Crown (NC) to
Reverse Crown (RC) Transition

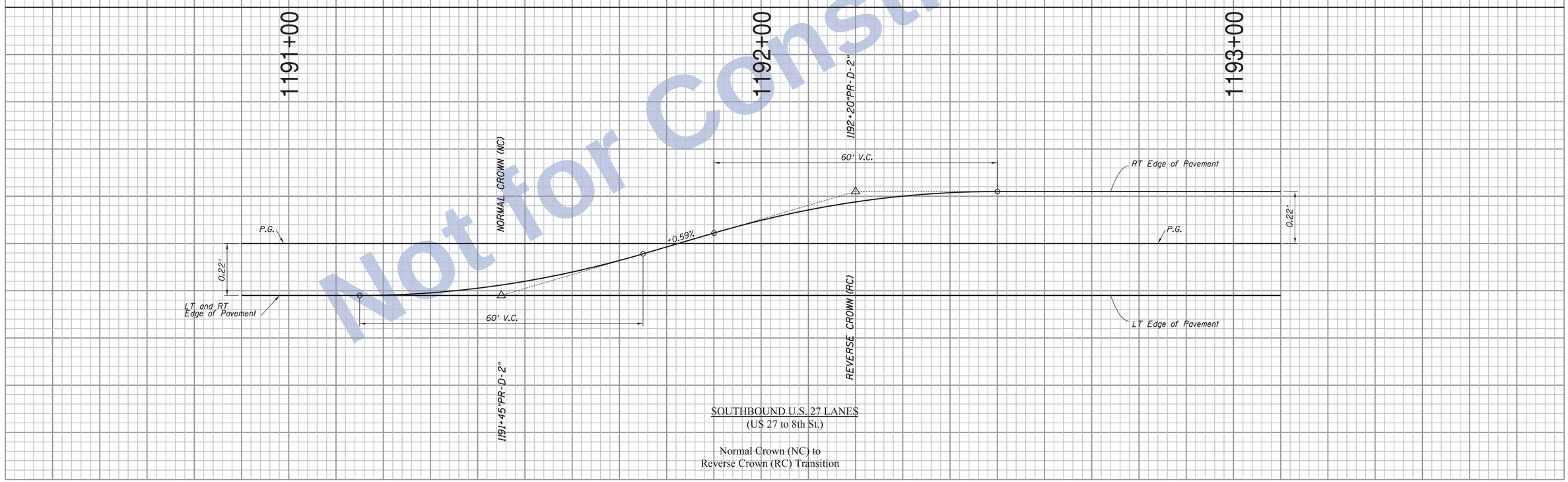

SOUTHBOUND U.S. 27 LANES
(US 27 to 8th St.)

Normal Crown (NC) to
Reverse Crown (RC) Transition

Not for Construction

Clark Dietz
ENGINEERS

RECOMMENDED FOR APPROVAL _____ DESIGN ENGINEER DATE

DESIGNED: JAL DRAWN: MP
CHECKED: RBI CHECKED: JAL

INDIANA
DEPARTMENT OF TRANSPORTATION

PAVEMENT TRANSITION DIAGRAM
US 27

HORIZONTAL SCALE	BRIDGE FILE
1" = 10'	
VERTICAL SCALE	DESIGNATION
1" = 50'	0100701
SURVEY BOOK	SHEETS
	123 of 278
CONTRACT	PROJECT
R-30397	0100701

12:11:37 PM 8/26/2016 P:\0170190\Plans\Misc\SE03_US27_02.dgn

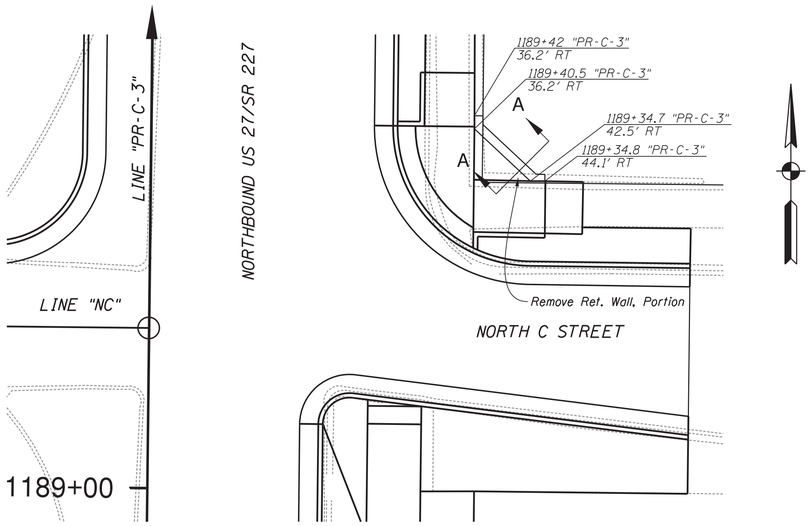

PLAN
Scale 1/8" = 1'

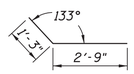

514a x 4'-0"
No Scale

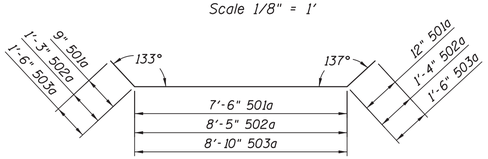

501a 9'-3"
502a 11'-0"
503a 11'-10"
No Scale

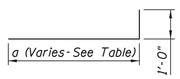

504a, 505a, 506a, 507a, 508a, 509a, 510a, 511a, 512a, & 513a
No Scale

Mark	a	Length
504a	5'-10"	6'-10"
505a	5'-9"	6'-9"
506a	5'-8"	6'-8"
507a	5'-6"	6'-6"
508a	5'-4"	6'-4"
509a	5'-2"	6'-2"
510a	4'-12"	6'-0"
511a	4'-10"	5'-10"
512a	4'-8"	5'-8"
513a	4'-6"	5'-6"

BILL OF MATERIALS
CONCRETE RETAINING WALL

REINFORCING STEEL

Size & Mark	No. of Bars	Length (ft.)	Weight (lbs)
501a	2	9'-3"	
502a	4	11'-0"	
503a	2	11'-10"	
504a	2	6'-10"	
505a	2	6'-9"	
506a	2	6'-8"	
507a	2	6'-6"	
508a	2	6'-4"	
509a	2	6'-2"	
510a	2	6'-0"	
511a	2	5'-10"	
512a	2	5'-8"	
513a	4	5'-6"	
514a	2	4'-0"	
5	2	8'-7"	
5	4	8'-0"	
5	1	2'-9"	
5	11	1'-8"	
5	12	1'-3"	
	Total #	5	329
	Total Reinforcing Steel =		329

CONCRETE

Concrete, A, Wall	1.0 Cys.
Concrete, B, Footings	2.0 Cys.

MISCELLANEOUS

Structural Backfill, Type 3	9.0 Cys.
Excavation, Common	10.0 Cys.

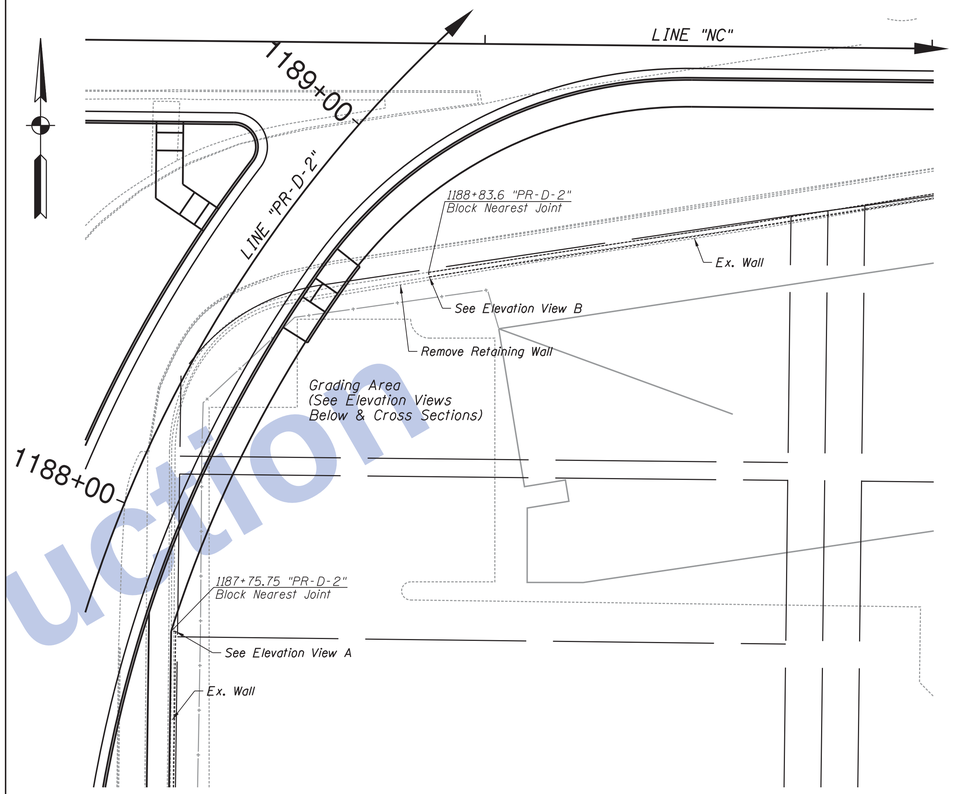

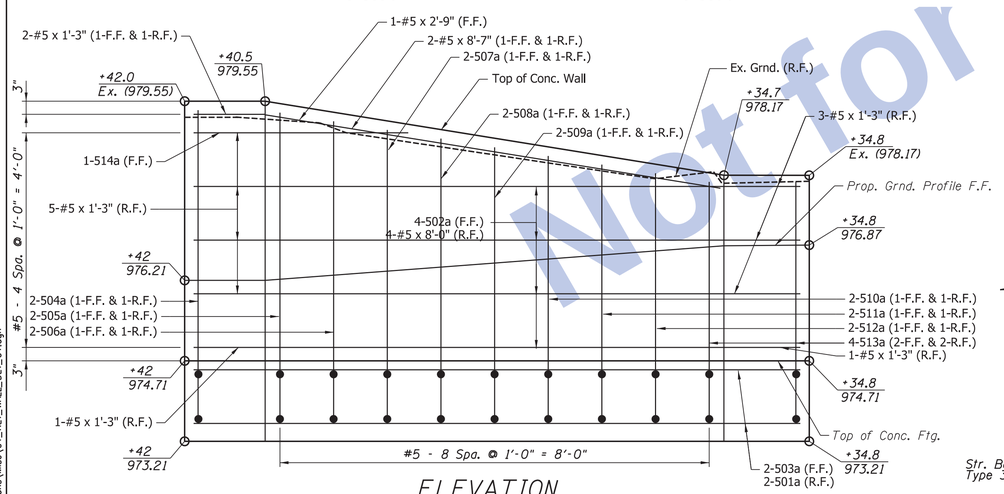

ELEVATION
Scale 3/4" = 1'

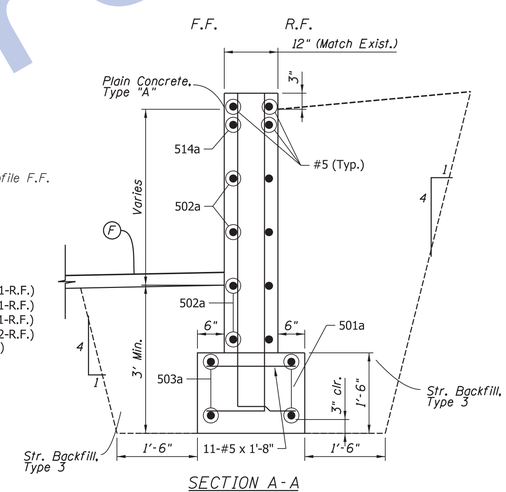

SECTION A-A
Scale 3/4" = 1'

CONCRETE RETAINING WALL

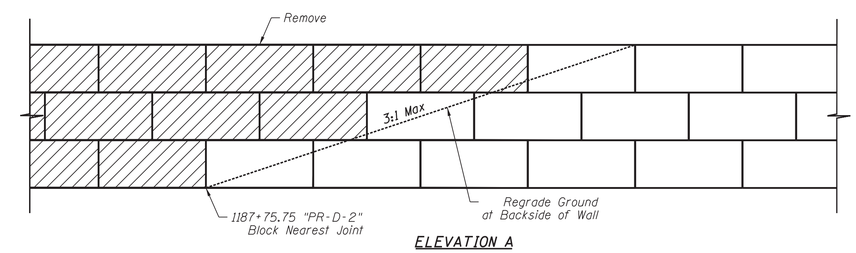

ELEVATION A
No Scale

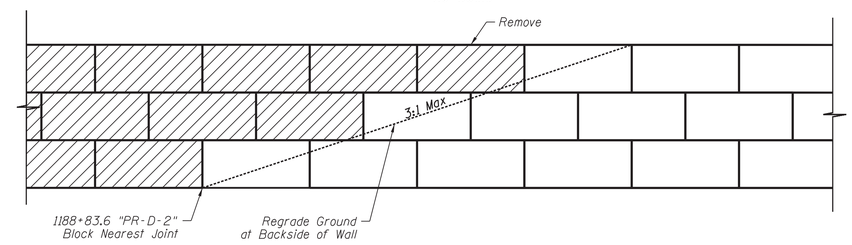

ELEVATION B
No Scale

Not for Construction

Clark Dietz
ENGINEERS

RECOMMENDED FOR APPROVAL _____ DESIGN ENGINEER DATE

DESIGNED: RBI DRAWN: MP
CHECKED: JAL CHECKED: JAL

INDIANA
DEPARTMENT OF TRANSPORTATION

RETAINING WALL DETAILS

HORIZONTAL SCALE	BRIDGE FILE
As Specified	
VERTICAL SCALE	DESIGNATION
As Specified	0100701
SURVEY BOOK	SHEETS
	124 of 278
CONTRACT	PROJECT
R-30397	0100701

12:11:39 PM 8/26/2016 P:\0170190\Plans\Misc\01_RET_WALL_DET_01.dgn

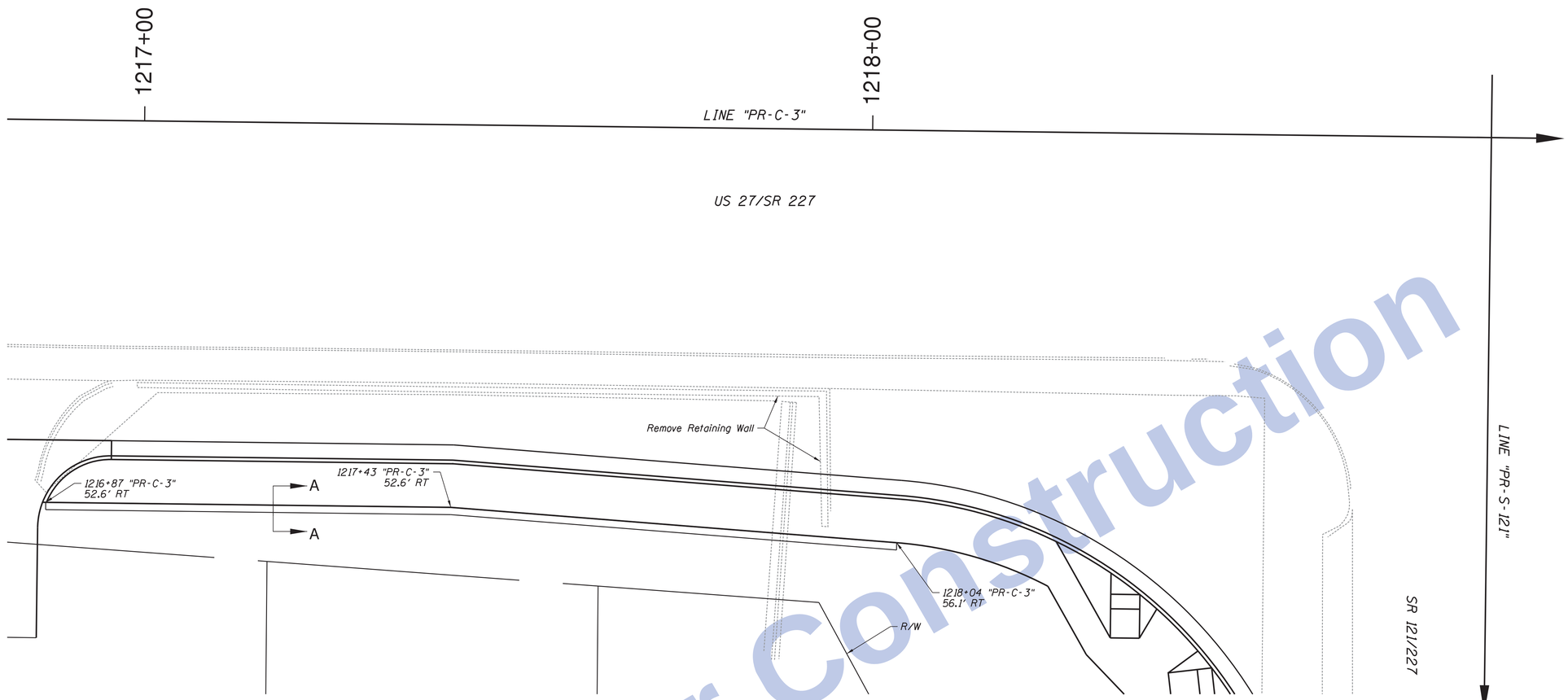

PLAN

Scale: 3/8" = 1'-0"

BILL OF MATERIALS		
Excavation, Common	212	Cys
Temporary Sheet Piling	1,146	Sft
Structure Backfill, Type 3	212	Cys
Aggregate for Drainage Fill	27	Cys
Modular Block Wall	783	Sft
Modular Block Wall Erection	783	Sft

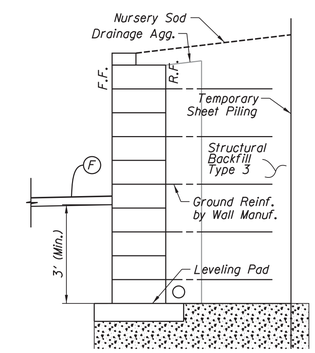

SECTION A-A

No Scale

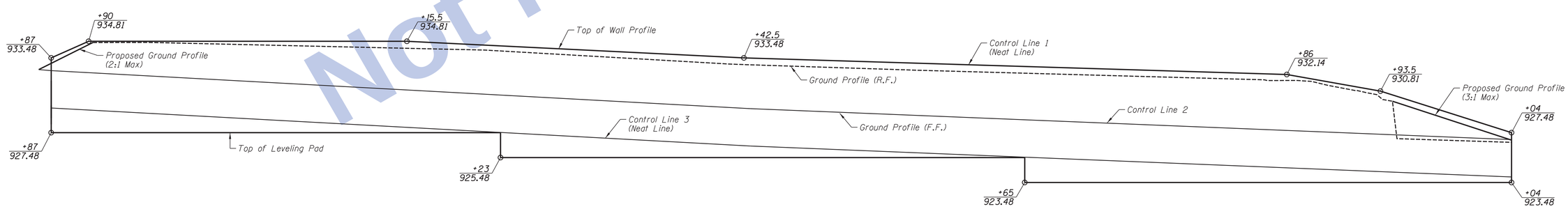

ELEVATION

Scale 1/4" = 1'

MODULAR BLOCK WALL

Not for Construction

Clark Dietz
ENGINEERS

RECOMMENDED FOR APPROVAL _____ DESIGN ENGINEER DATE

DESIGNED: JAL | DRAWN: MP
CHECKED: RBI | CHECKED: JAL

INDIANA
DEPARTMENT OF TRANSPORTATION

RETAINING WALL DETAILS

HORIZONTAL SCALE	BRIDGE FILE
NONE	
VERTICAL SCALE	DESIGNATION
NONE	0100701
SURVEY BOOK	SHEETS
	125 of 278
CONTRACT	PROJECT
R-30397	0100701

12:11:41 PM 8/26/2016 P:\0170190\Plans\Misc\01_RET_WALL_DET_02.dgn

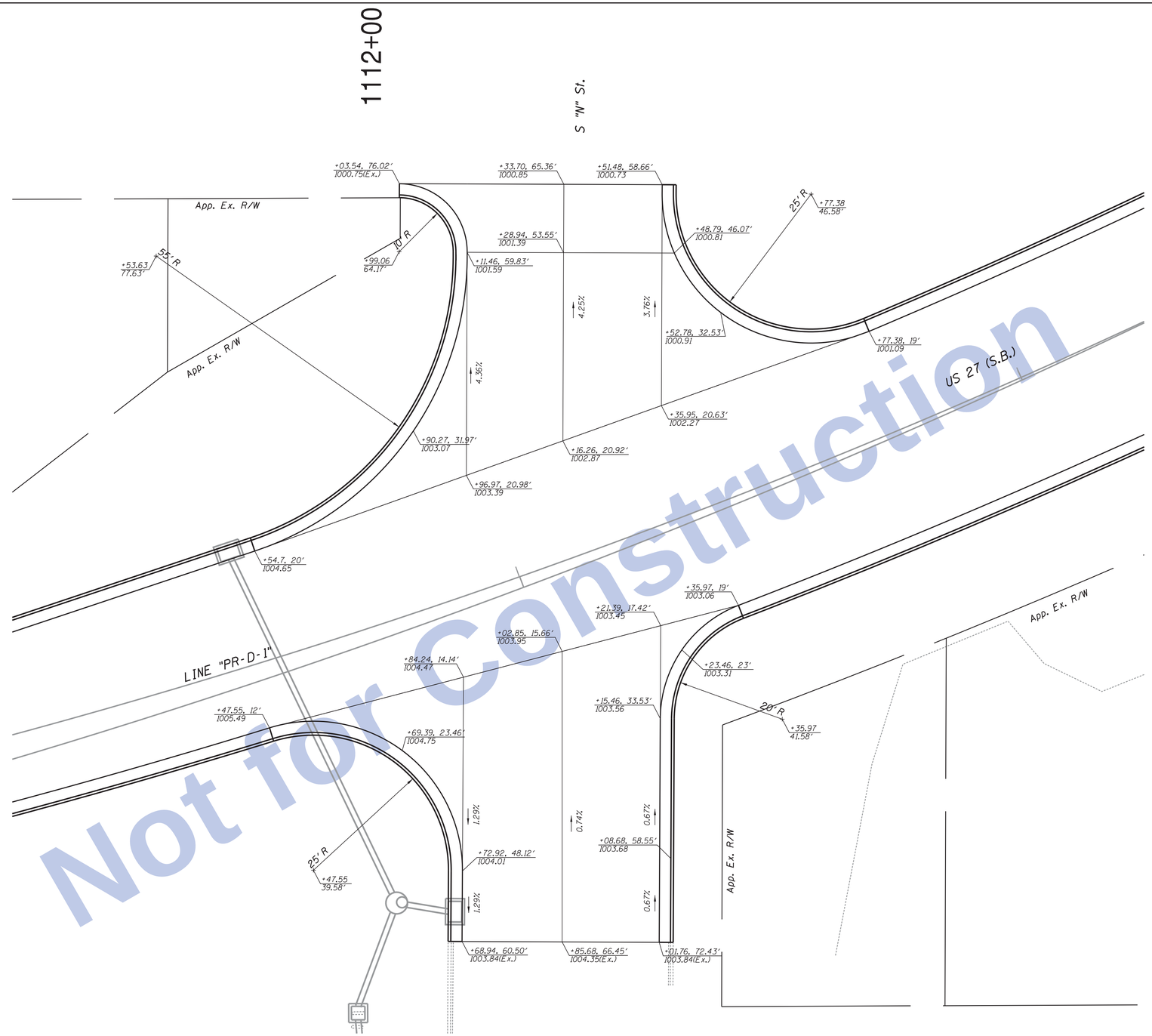

Not for Construction

ALL CALLOUTS DESCRIBED FROM LINE "PR-D-1", UNLESS OTHERWISE SHOWN.

Clark Dietz
ENGINEERS

RECOMMENDED FOR APPROVAL _____ DESIGN ENGINEER DATE

DESIGNED: JAL | DRAWN: MP
CHECKED: RBI | CHECKED: JAL

INDIANA
DEPARTMENT OF TRANSPORTATION

INTERSECTION, CURB RAMP DETAILS
&
SPOT ELEVATION

HORIZONTAL SCALE	BRIDGE FILE
1" = 10'	
VERTICAL SCALE	DESIGNATION
NONE	0100701
SURVEY BOOK	SHEETS
	126 of 278
CONTRACT	PROJECT
R-30397	0100701

12:11:43 PM 8/26/2016 P:\0170190\Plans\Misc\INTDET23_US27SB_SR227_SN_01.dgn

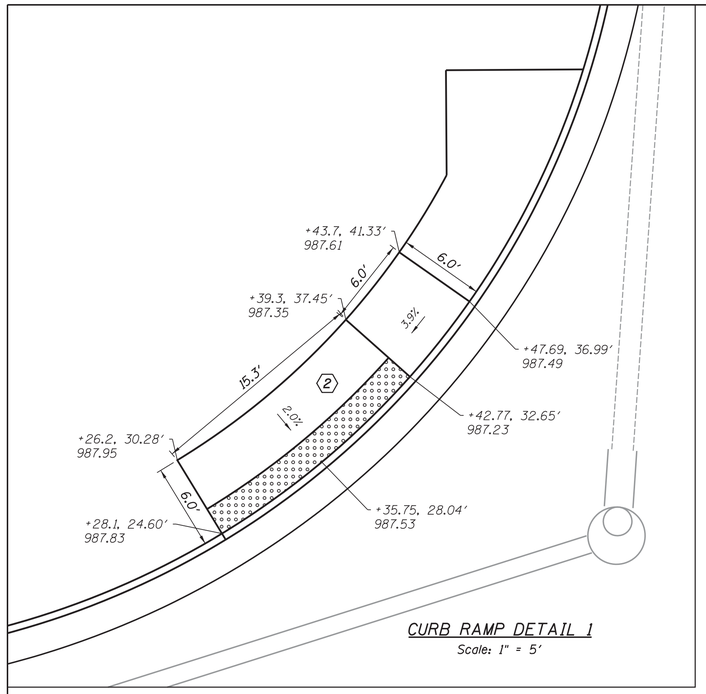

CURB RAMP DETAIL 1
Scale: 1" = 5'

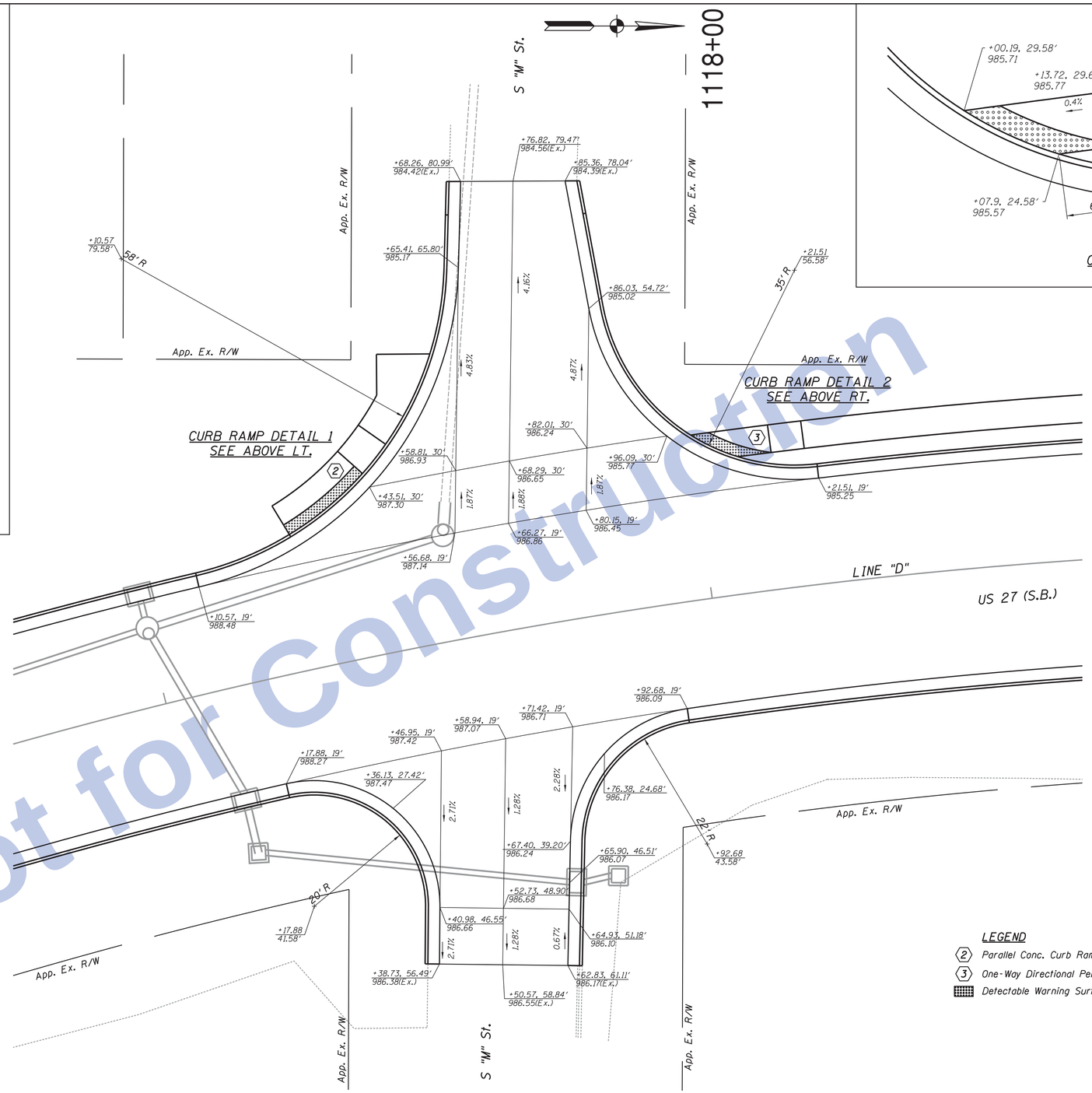

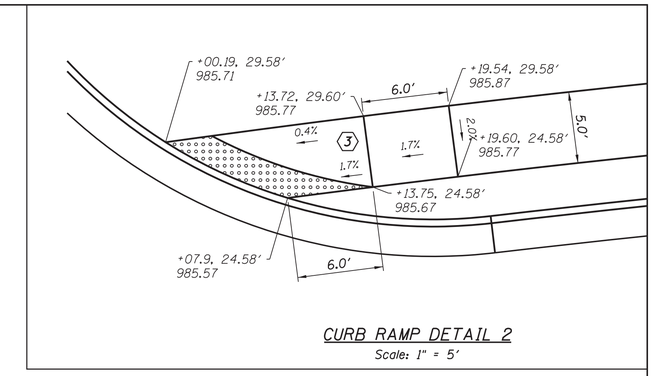

CURB RAMP DETAIL 2
Scale: 1" = 5'

Not for Construction

LEGEND

- (2) Parallel Conc. Curb Ramp
- (3) One-Way Directional Perpendicular Conc. Curb Ramp
- Detectable Warning Surface, 2' Width (Typ.)

ALL CALLOUTS DESCRIBED FROM LINE "D", UNLESS OTHERWISE SHOWN.

Clark Dietz
ENGINEERS

RECOMMENDED FOR APPROVAL _____ DESIGN ENGINEER DATE

DESIGNED: JAL | DRAWN: MP
CHECKED: RBI | CHECKED: JAL

INDIANA
DEPARTMENT OF TRANSPORTATION

INTERSECTION, CURB RAMP DETAILS
&
SPOT ELEVATION

HORIZONTAL SCALE	BRIDGE FILE
1" = 10'	
VERTICAL SCALE	DESIGNATION
NONE	0100701
SURVEY BOOK	SHEETS
	127 of 278
CONTRACT	PROJECT
R-30397	0100701

12:11:46 PM 8/26/2016 P:\0170190\Plans\Misc\INTDET24_US27SB_SM_02.dgn

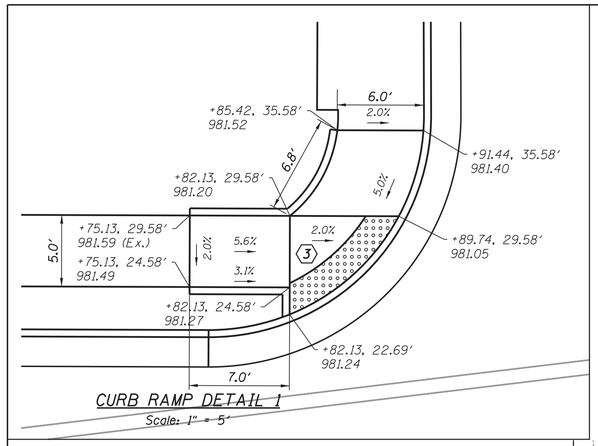

CURB RAMP DETAIL 1
Scale: 1" = 5′

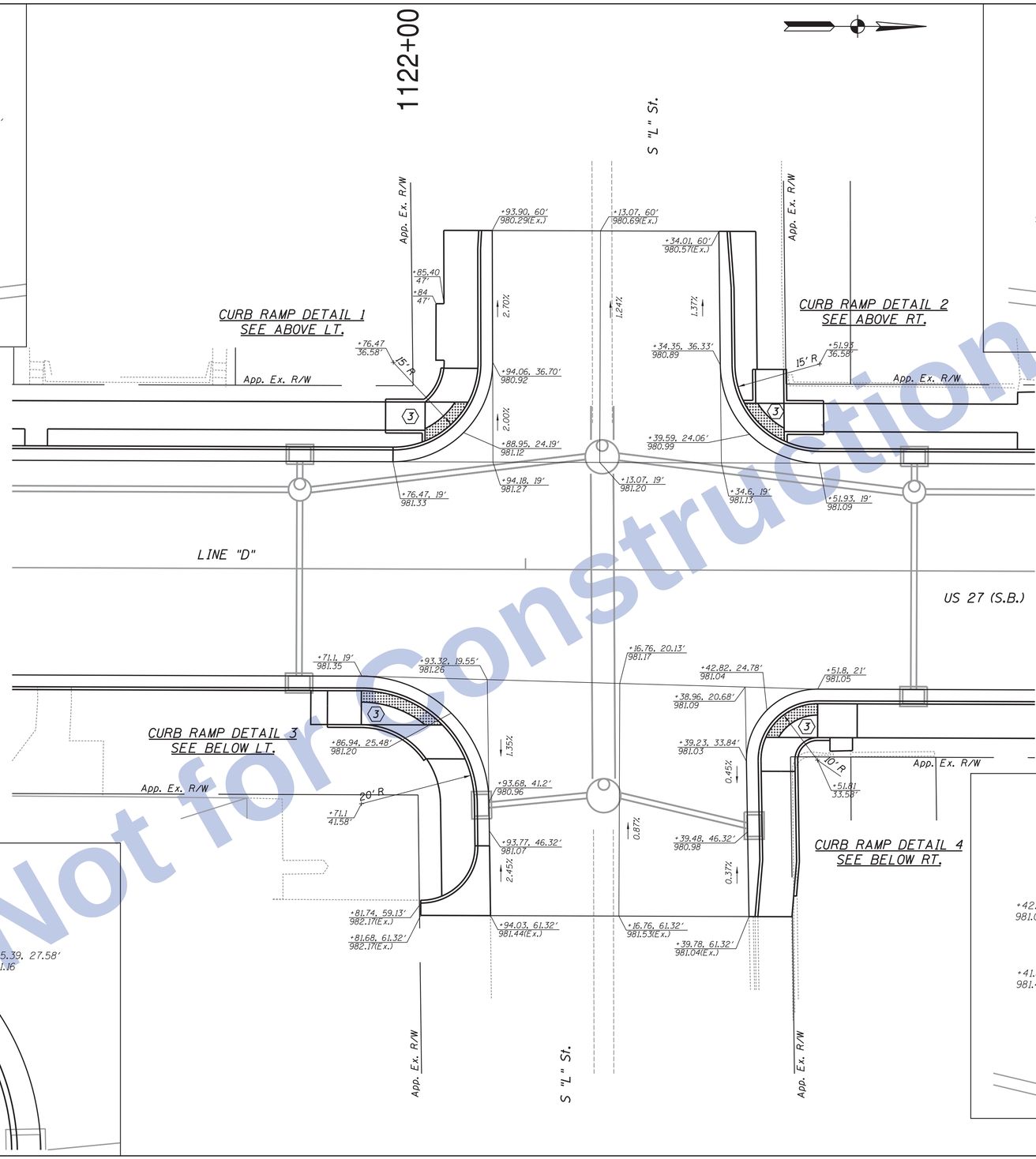

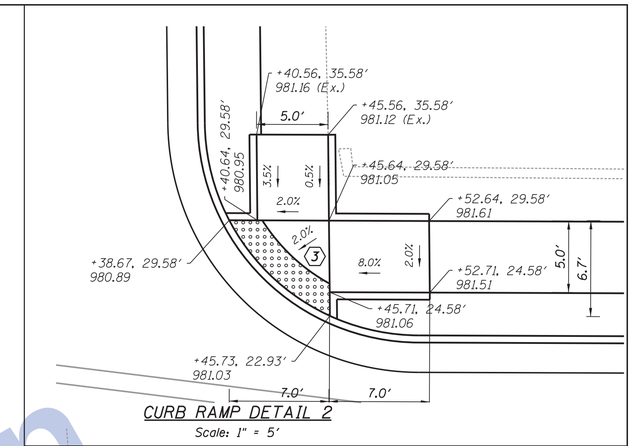

CURB RAMP DETAIL 2
Scale: 1" = 5′

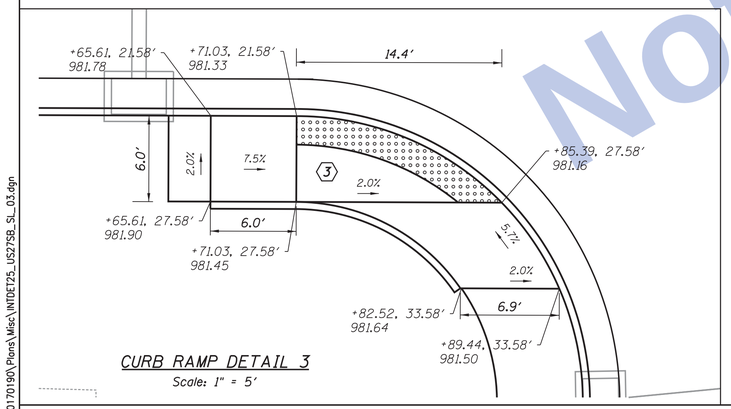

CURB RAMP DETAIL 3
Scale: 1" = 5′

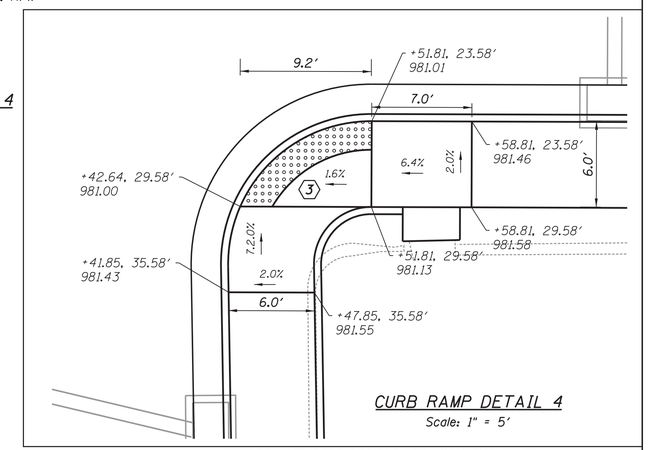

CURB RAMP DETAIL 4
Scale: 1" = 5′

ALL CALLOUTS DESCRIBED FROM LINE "D", UNLESS OTHERWISE SHOWN.

LEGEND

(3) One-Way Directional Perpendicular Conc. Curb Ramp

Detectable Warning Surface, 2′ Width (Typ.)

Not for Construction

Clark Dietz
ENGINEERS

RECOMMENDED FOR APPROVAL _____ DESIGN ENGINEER DATE

DESIGNED: JAL | DRAWN: MP
CHECKED: RBI | CHECKED: JAL

INDIANA
DEPARTMENT OF TRANSPORTATION

INTERSECTION, CURB RAMP DETAILS
&
SPOT ELEVATION

HORIZONTAL SCALE	BRIDGE FILE
1" = 10′	
VERTICAL SCALE	DESIGNATION
NONE	0100701
SURVEY BOOK	SHEETS
	128 of 278
CONTRACT	PROJECT
R-30397	0100701

12:11:48 PM 8/26/2016 P:\0170190\Plans\Misc\INTDET25_US27SB_SL_03.dgn

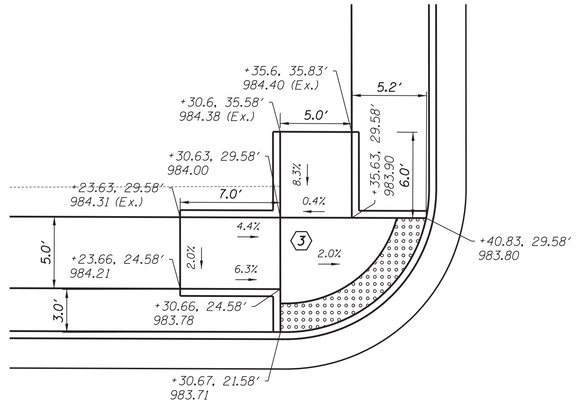

CURB RAMP DETAIL 1

Scale: 1" = 5′

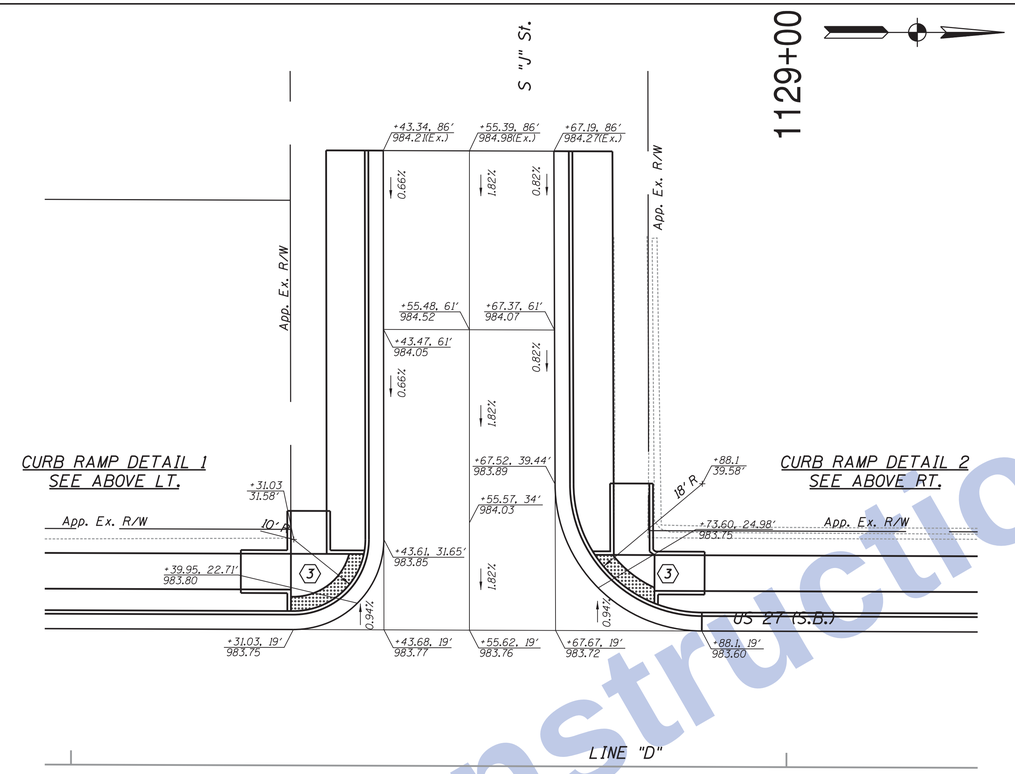

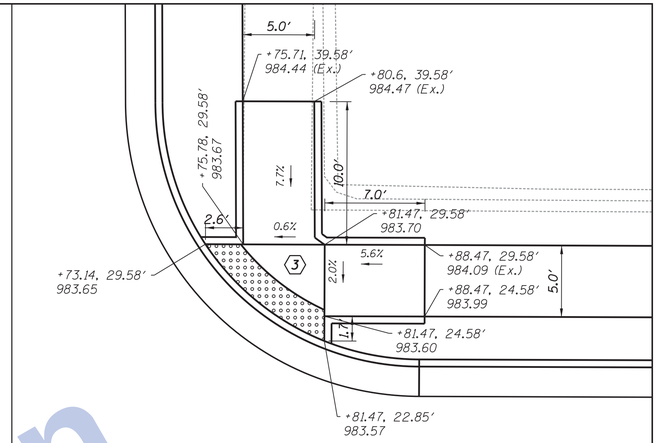

CURB RAMP DETAIL 2

Scale: 1" = 5′

LEGEND

(3) One-Way Directional Perpendicular Conc. Curb Ramp

Detectable Warning Surface, 2′ Width (Typ.)

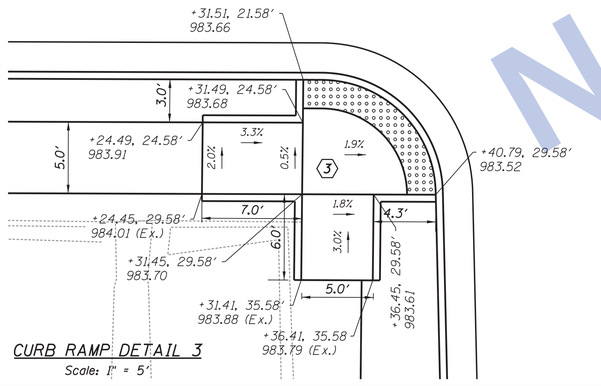

CURB RAMP DETAIL 3

Scale: 1" = 5′

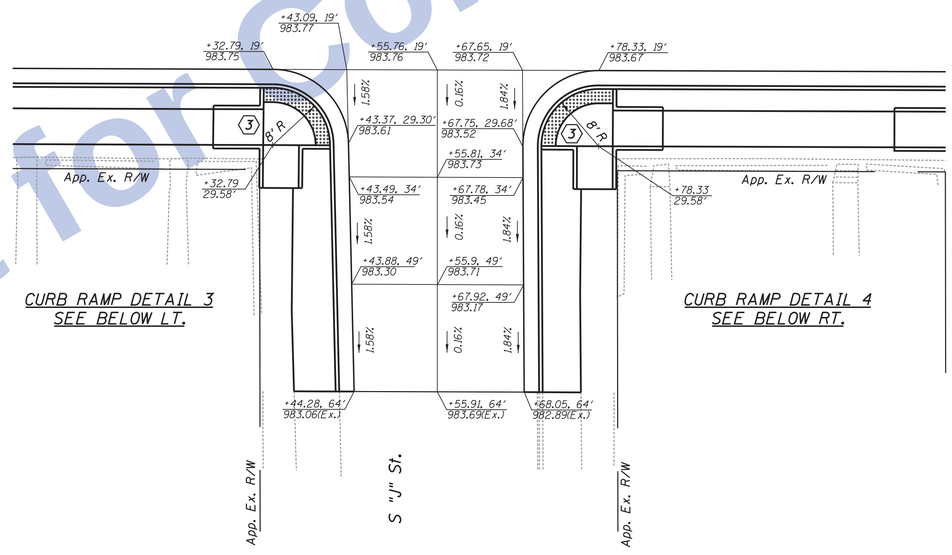

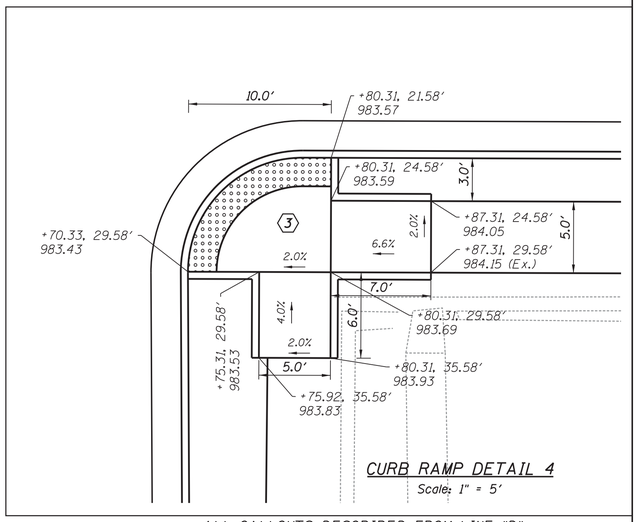

CURB RAMP DETAIL 4

Scale: 1" = 5′

ALL CALLOUTS DESCRIBED FROM LINE "D", UNLESS OTHERWISE SHOWN.

Not for Construction

Clark Dietz ENGINEERS

12:11:50 PM 8/26/2016 P:\0170190\Plans\Misc\INTDET26_US27SB_SJ_04.dgn

RECOMMENDED FOR APPROVAL	DESIGN ENGINEER DATE
DESIGNED: JAL	DRAWN: MP
CHECKED: RBI	CHECKED: JAL

INDIANA
DEPARTMENT OF TRANSPORTATION

INTERSECTION, CURB RAMP DETAILS
&
SPOT ELEVATION

HORIZONTAL SCALE	BRIDGE FILE
1" = 10′	
VERTICAL SCALE	DESIGNATION
NONE	0100701
SURVEY BOOK	SHEETS
	129 of 278
CONTRACT	PROJECT
R-30397	0100701

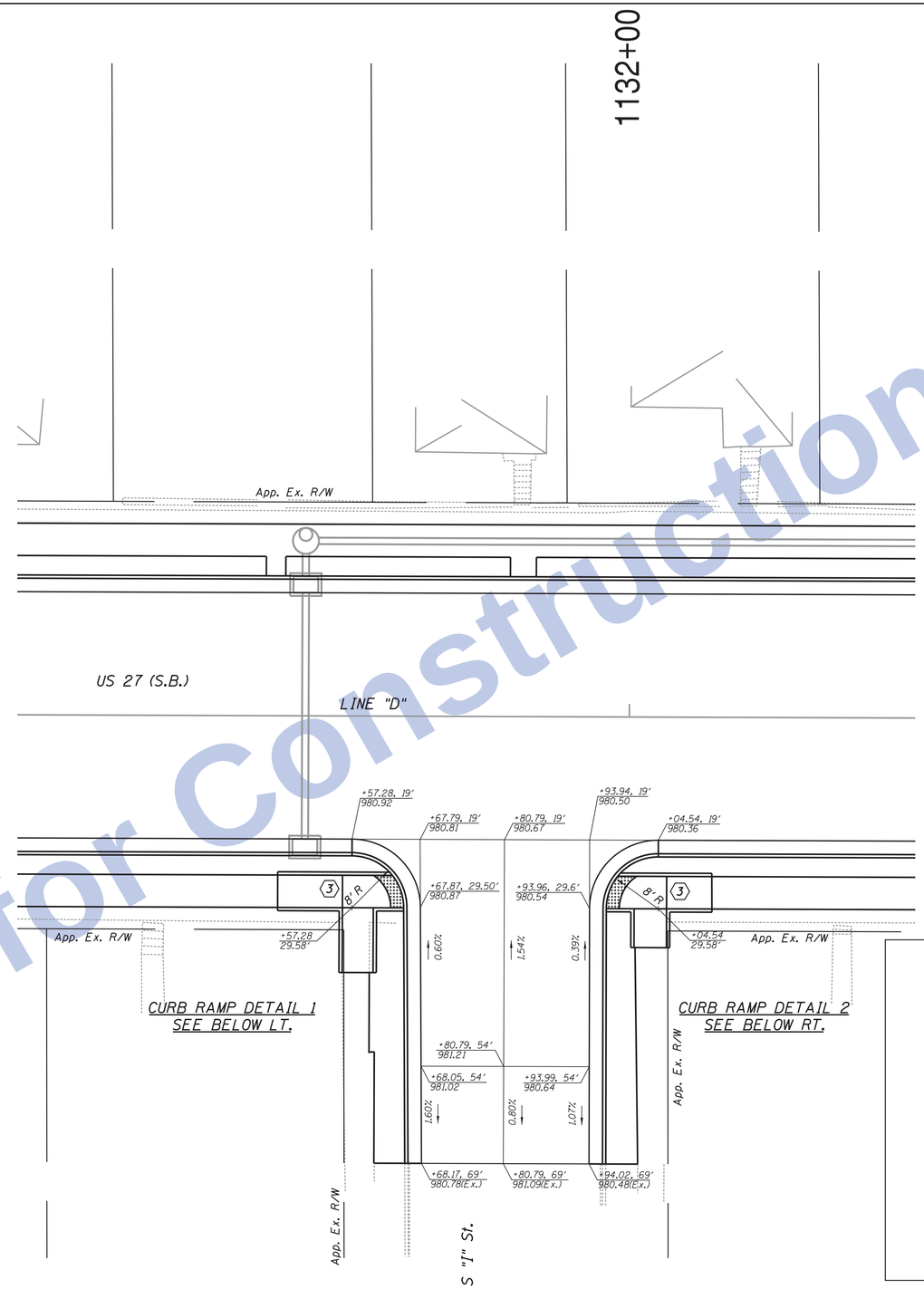

LEGEND

- (3) One-Way Directional Perpendicular Conc. Curb Ramp
- Detectable Warning Surface, 2' Width (Typ.)

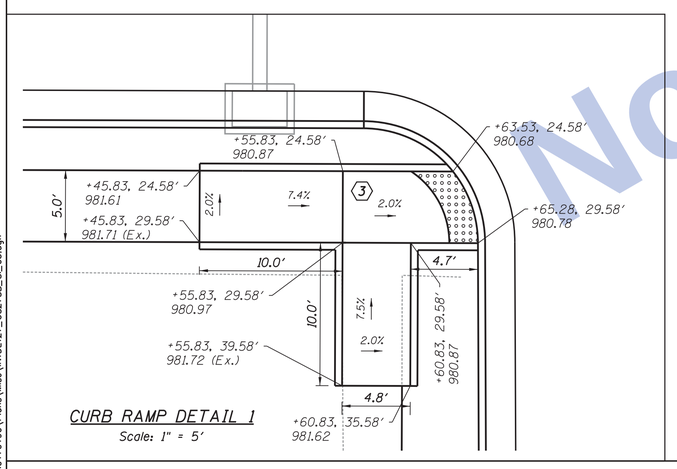

CURB RAMP DETAIL 1
Scale: 1" = 5'

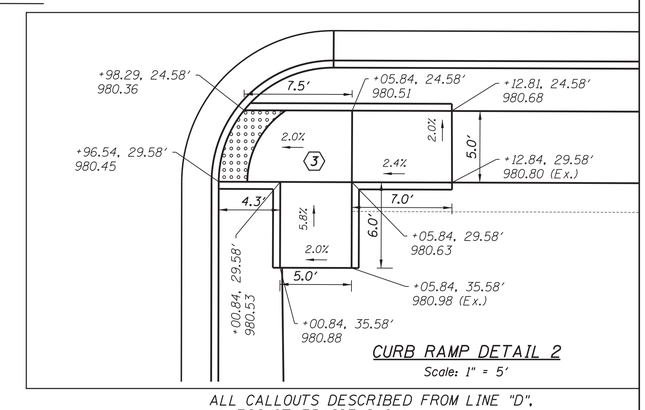

CURB RAMP DETAIL 2
Scale: 1" = 5'

ALL CALLOUTS DESCRIBED FROM LINE "D", UNLESS OTHERWISE SHOWN.

Not for Construction

Clark Dietz
ENGINEERS

RECOMMENDED FOR APPROVAL _____ DESIGN ENGINEER DATE

DESIGNED: JAL | DRAWN: MP
CHECKED: RBI | CHECKED: JAL

INDIANA
DEPARTMENT OF TRANSPORTATION

INTERSECTION, CURB RAMP DETAILS
&
SPOT ELEVATION

HORIZONTAL SCALE	BRIDGE FILE
1" = 10'	
VERTICAL SCALE	DESIGNATION
NONE	0100701
SURVEY BOOK	SHEETS
	130 of 278
CONTRACT	PROJECT
R-30397	0100701

12:11:52 PM 8/26/2016 P:\0170190\Plans\Misc\INTDET27_US27SB_SL_05.dgn

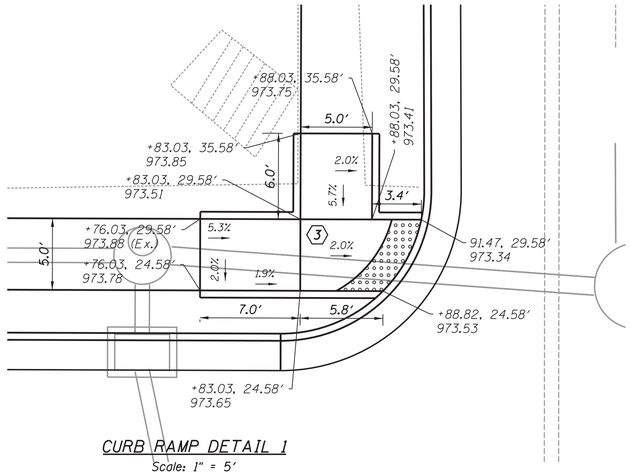

CURB RAMP DETAIL 1

Scale: 1" = 5′

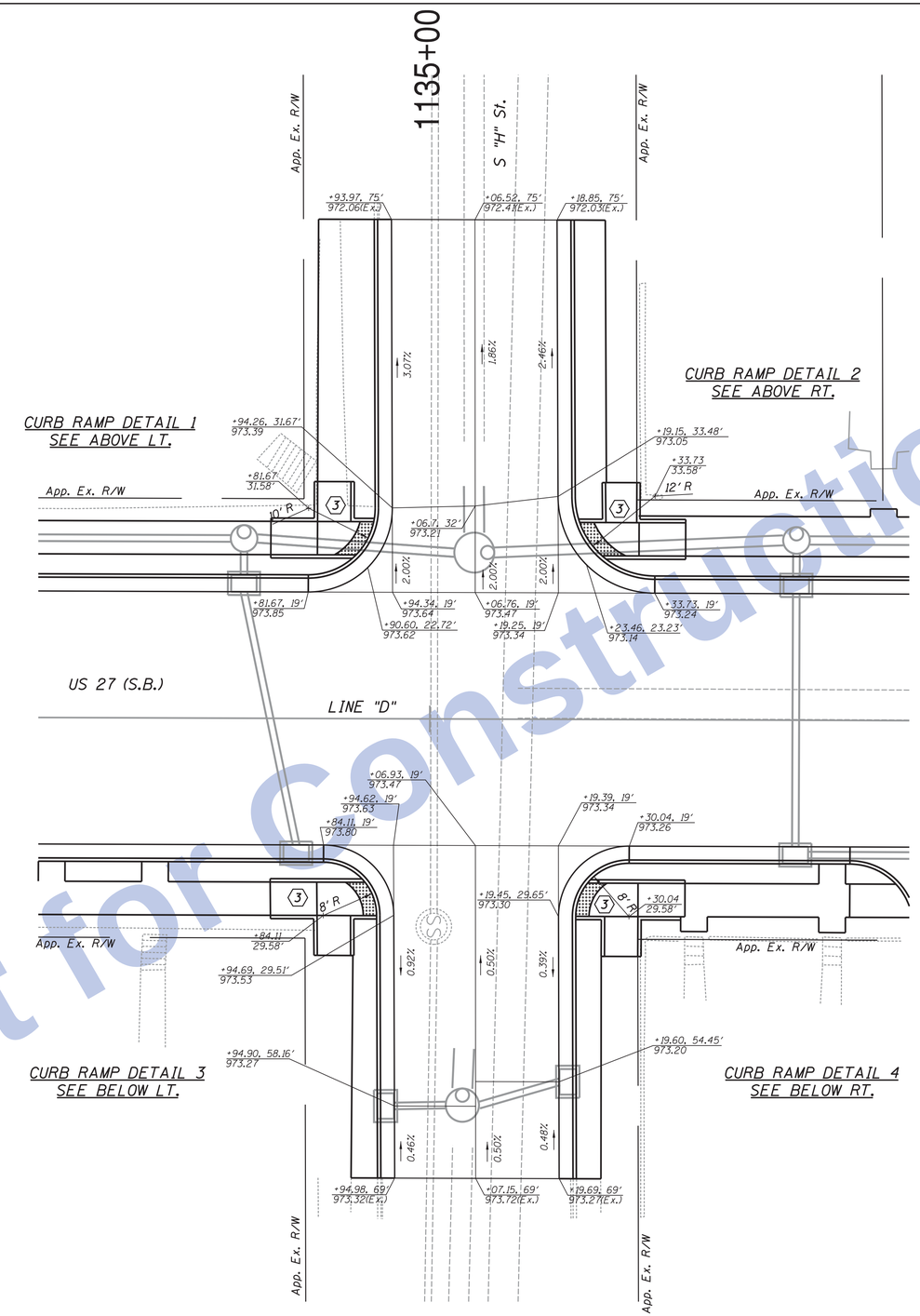

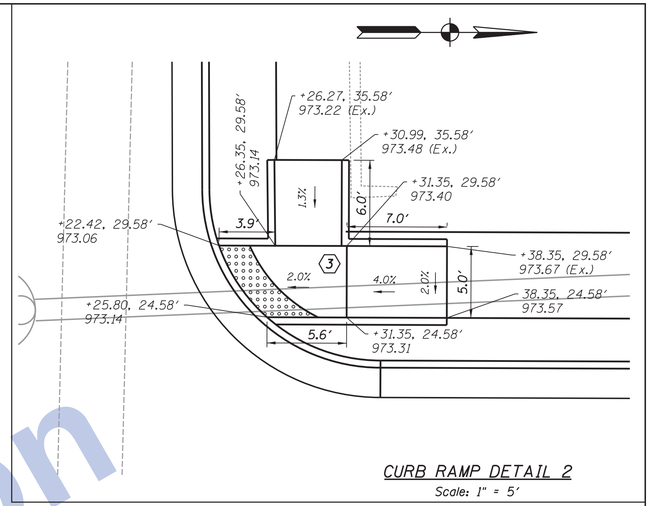

CURB RAMP DETAIL 2

Scale: 1" = 5′

LEGEND

(3) One-Way Directional Perpendicular Conc. Curb Ramp

Detectable Warning Surface, 2′ Width (Typ.)

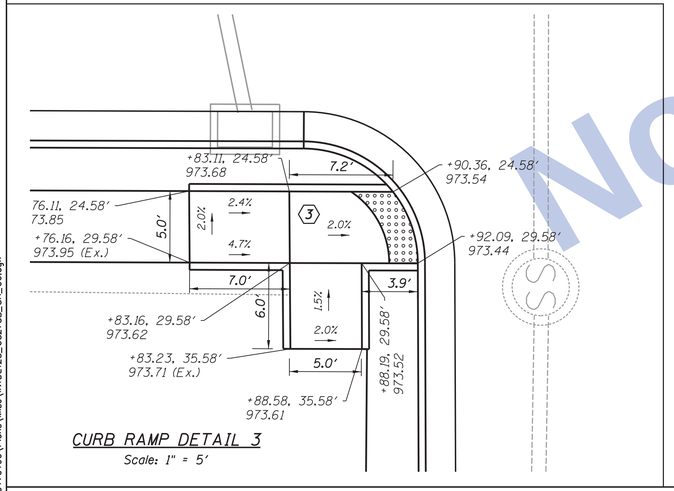

CURB RAMP DETAIL 3

Scale: 1" = 5′

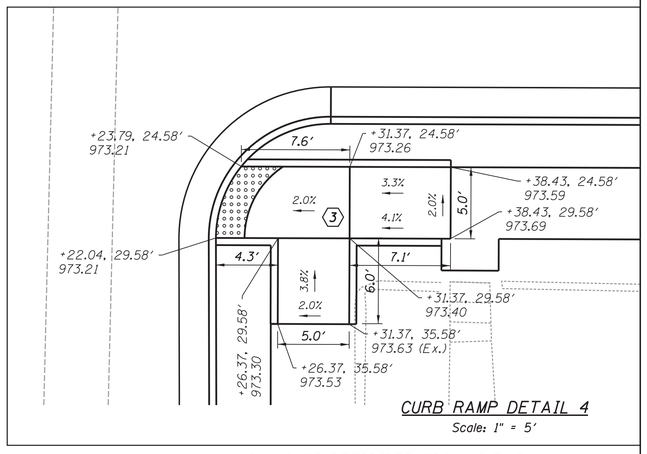

CURB RAMP DETAIL 4

Scale: 1" = 5′

ALL CALLOUTS DESCRIBED FROM LINE "D", UNLESS OTHERWISE SHOWN.

Not for Construction

12:11:54 PM 8/26/2016 P:\0170190\Plans\Misc\INTDET2B_US27SB_SH_06.dgn

Clark Dietz ENGINEERS

RECOMMENDED FOR APPROVAL _____ DESIGN ENGINEER DATE

DESIGNED: JAL DRAWN: MP

CHECKED: RBI CHECKED: JAL

INDIANA DEPARTMENT OF TRANSPORTATION

INTERSECTION, CURB RAMP DETAILS & SPOT ELEVATION

HORIZONTAL SCALE	BRIDGE FILE
1" = 10′	
VERTICAL SCALE	DESIGNATION
NONE	0100701
SURVEY BOOK	SHEETS
	131 of 278
CONTRACT	PROJECT
R-30397	0100701

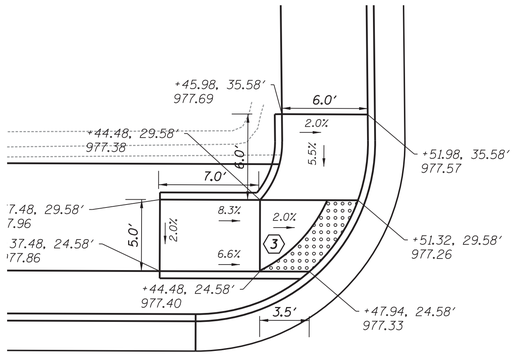

CURB RAMP DETAIL 1

Scale: 1" = 5′

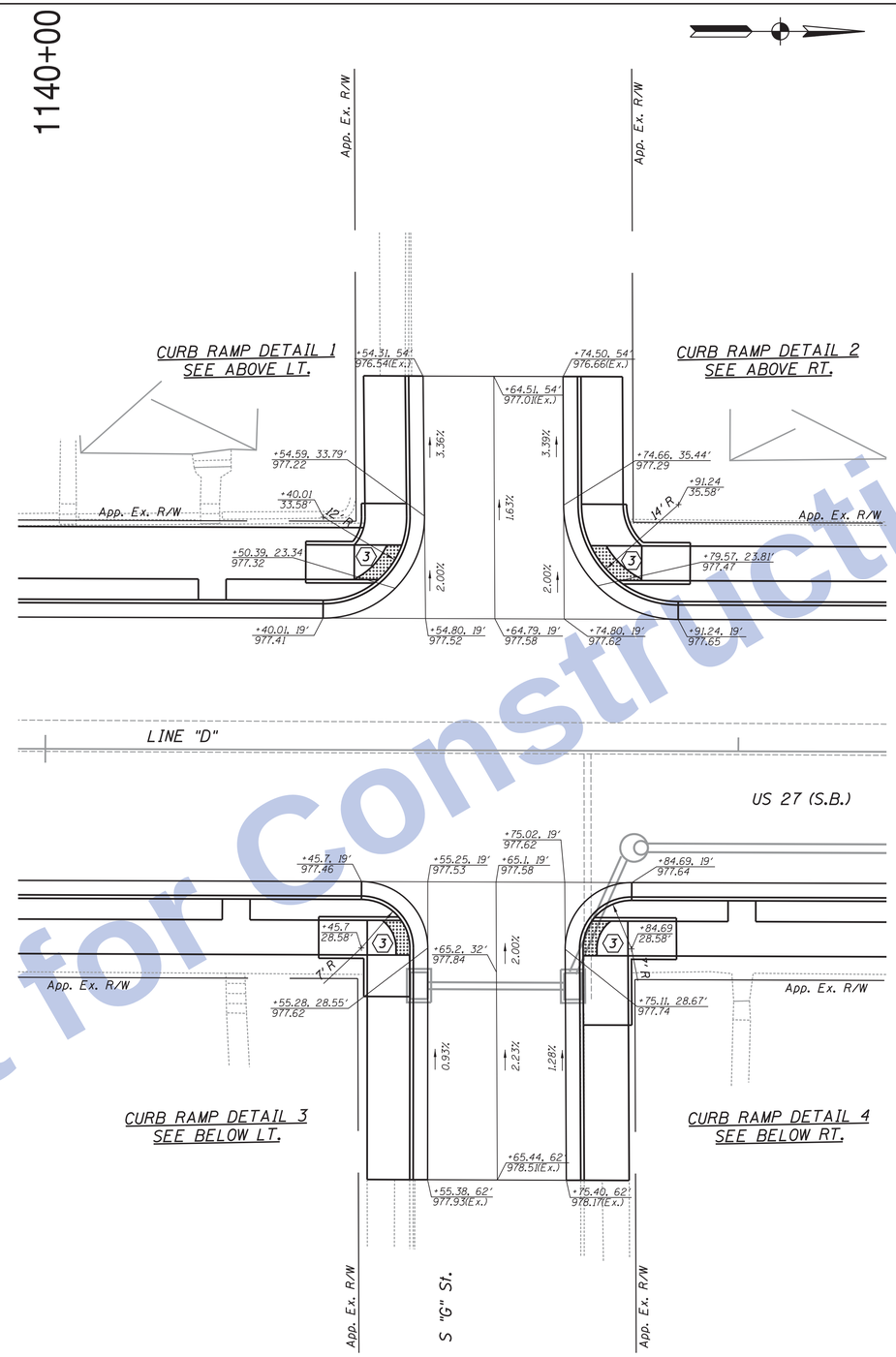

CURB RAMP DETAIL 3
SEE BELOW LT.

CURB RAMP DETAIL 4
SEE BELOW RT.

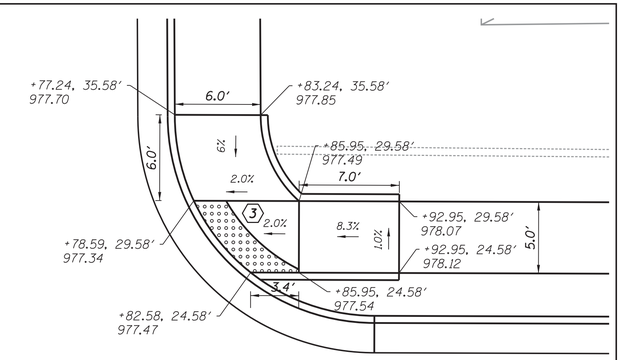

CURB RAMP DETAIL 2

Scale: 1" = 5′

LEGEND

3 One-Way Directional Perpendicular Conc. Curb Ramp

Detectable Warning Surface, 2′ Width (Typ.)

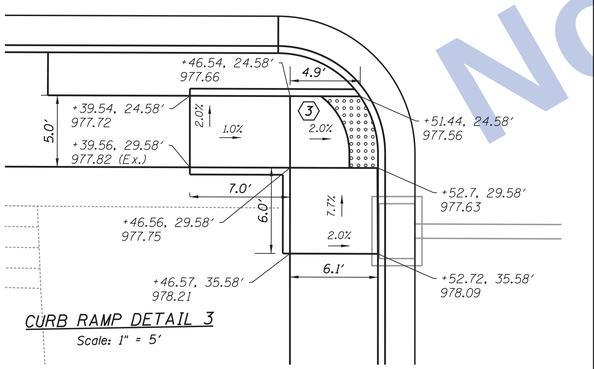

CURB RAMP DETAIL 3

Scale: 1" = 5′

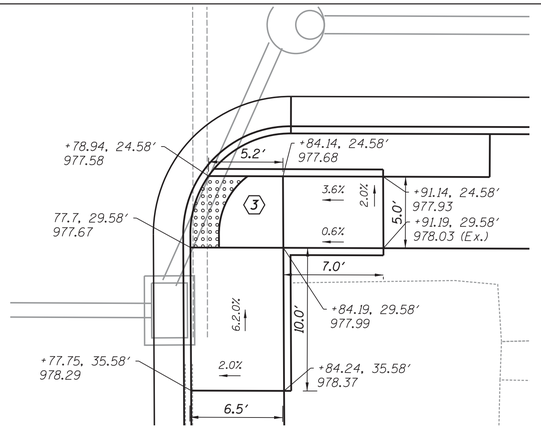

CURB RAMP DETAIL 4

Scale: 1" = 5′

ALL CALLOUTS DESCRIBED FROM LINE "D", UNLESS OTHERWISE SHOWN.

Not for Construction

Clark Dietz ENGINEERS

12:11:56 PM 8/26/2016 P:\0170190\Plans\Misc\INTDET29_US27SB_SG_07.dgn

RECOMMENDED FOR APPROVAL _____ DESIGN ENGINEER DATE	INDIANA DEPARTMENT OF TRANSPORTATION	HORIZONTAL SCALE: 1" = 10′ / BRIDGE FILE:
		VERTICAL SCALE: NONE / DESIGNATION: 0100701
DESIGNED: JAL / DRAWN: MP	INTERSECTION, CURB RAMP DETAILS & SPOT ELEVATION	SURVEY BOOK: / SHEETS: 132 of 278
CHECKED: RBI / CHECKED: JAL		CONTRACT: R-30397 / PROJECT: 0100701

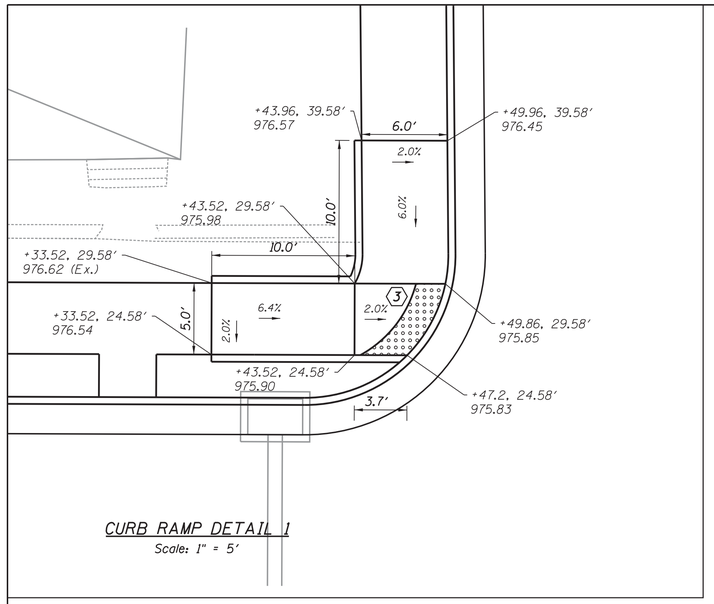

CURB RAMP DETAIL 1
Scale: 1" = 5′

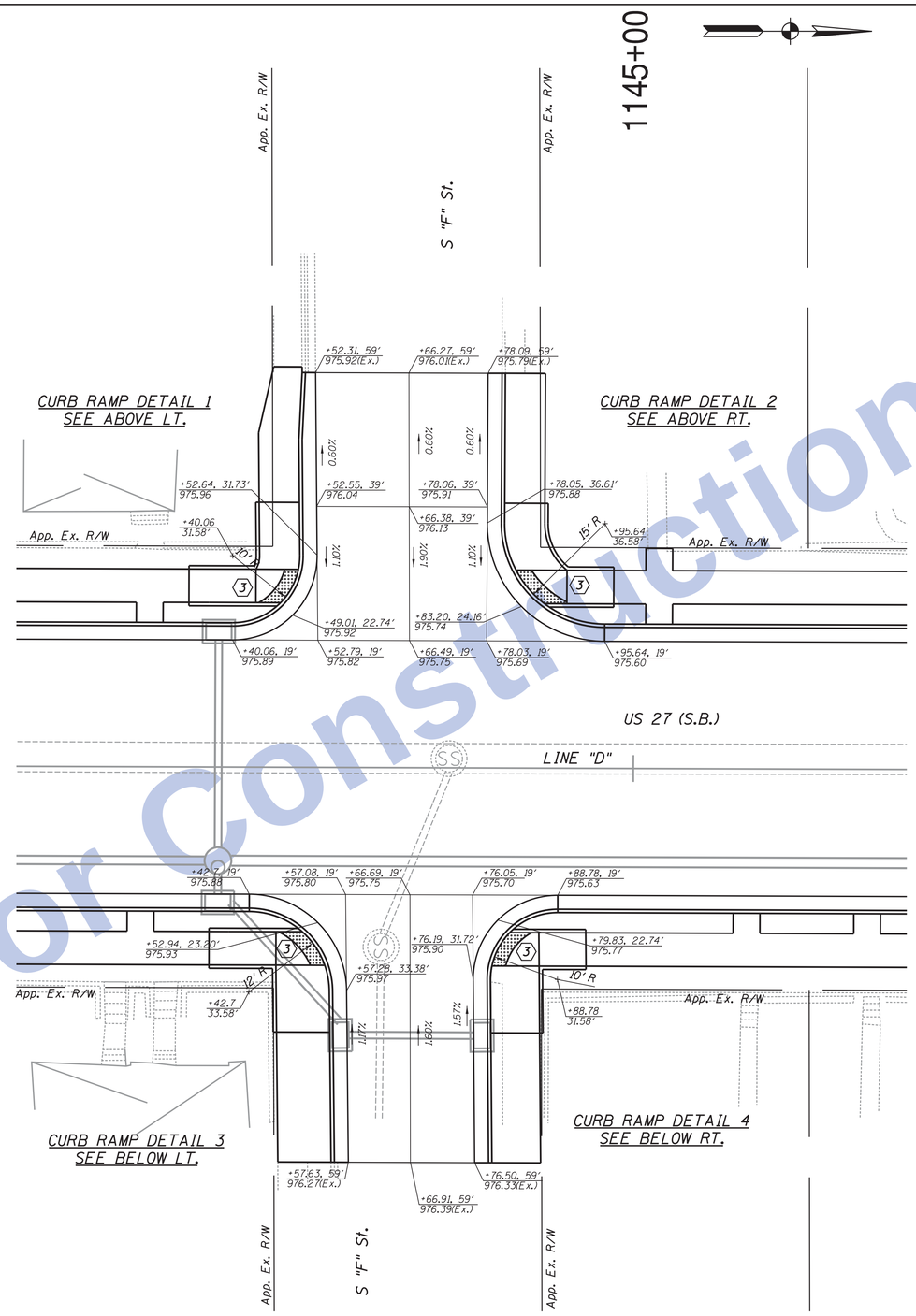

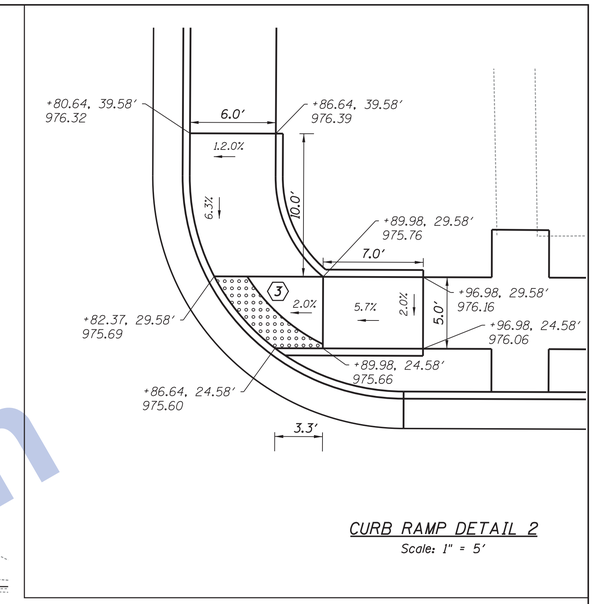

CURB RAMP DETAIL 2
Scale: 1" = 5′

LEGEND

3 One-Way Directional Perpendicular Conc. Curb Ramp

Detectable Warning Surface, 2′ Width (Typ.)

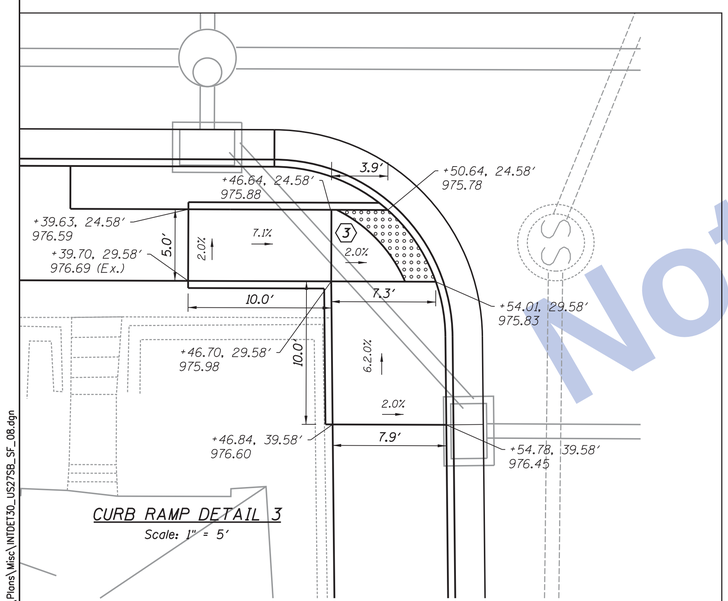

CURB RAMP DETAIL 3
Scale: 1" = 5′

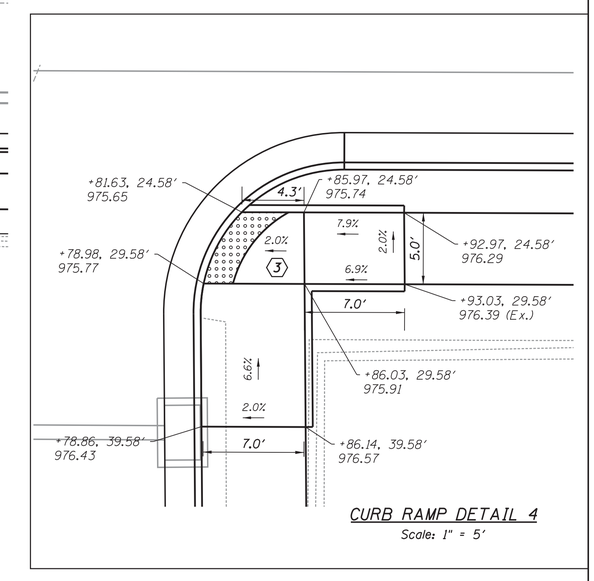

CURB RAMP DETAIL 4
Scale: 1" = 5′

ALL CALLOUTS DESCRIBED FROM LINE "D", UNLESS OTHERWISE SHOWN.

Not for Construction

Clark Dietz
ENGINEERS

RECOMMENDED FOR APPROVAL _____ DESIGN ENGINEER DATE

DESIGNED: JAL DRAWN: MP
CHECKED: RBI CHECKED: JAL

INDIANA
DEPARTMENT OF TRANSPORTATION

INTERSECTION, CURB RAMP DETAILS
&
SPOT ELEVATION

HORIZONTAL SCALE	BRIDGE FILE
1" = 10′	
VERTICAL SCALE	DESIGNATION
NONE	0100701
SURVEY BOOK	SHEETS
	133 of 278
CONTRACT	PROJECT
R-30397	0100701

12:11:58 PM 8/26/2016 P:\0170190\Plans\Misc\INTDET30_US27SB_SF_08.dgn

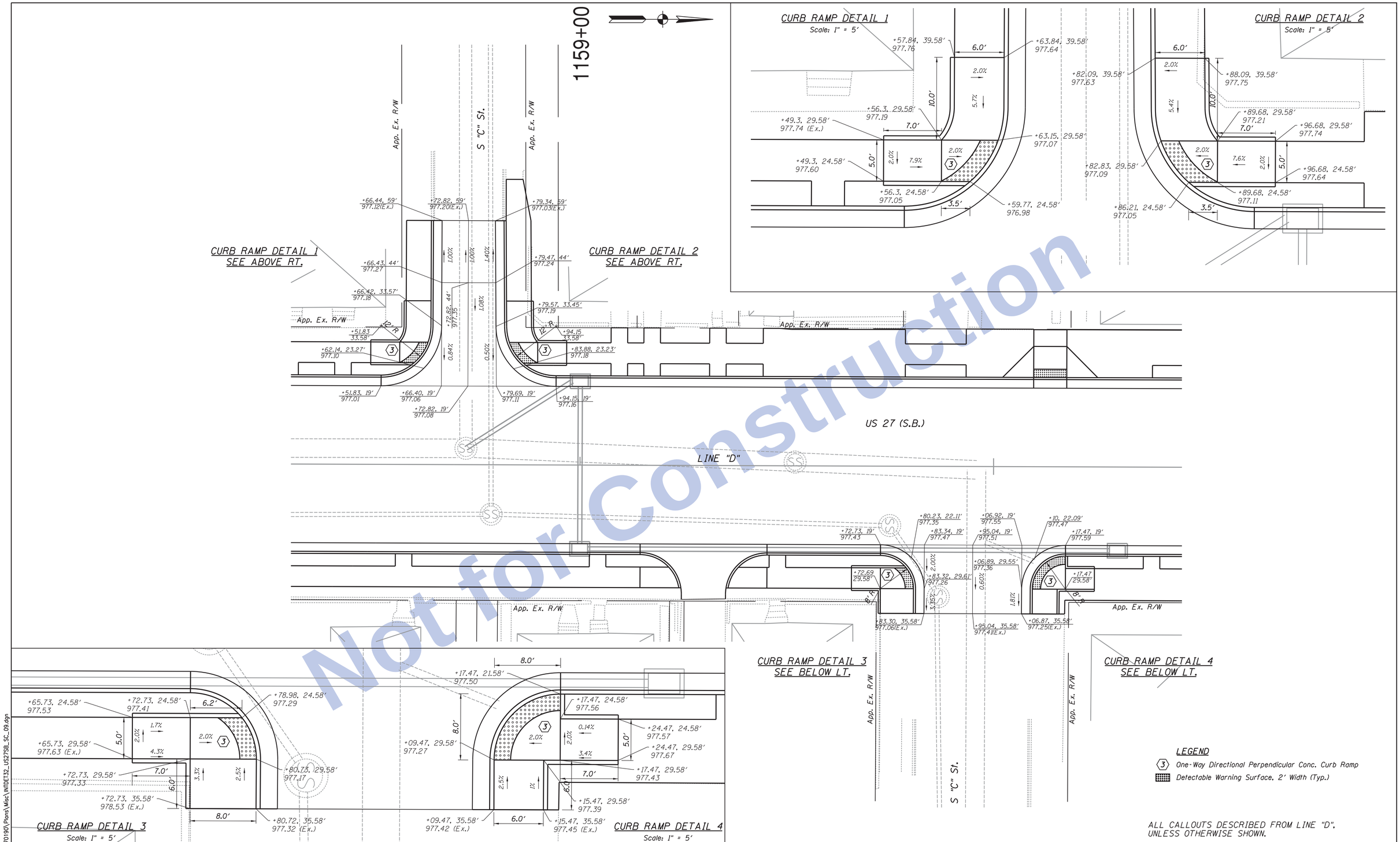

Not for Construction

Clark Dietz
ENGINEERS

RECOMMENDED FOR APPROVAL _____ DESIGN ENGINEER DATE	INDIANA DEPARTMENT OF TRANSPORTATION	HORIZONTAL SCALE: 1" = 10' / BRIDGE FILE
		VERTICAL SCALE: NONE / DESIGNATION: 0100701
DESIGNED: JAL / DRAWN: MP	INTERSECTION, CURB RAMP DETAILS & SPOT ELEVATION	SURVEY BOOK / SHEETS: 134 of 278
CHECKED: RBI / CHECKED: JAL		CONTRACT: R-30397 / PROJECT: 0100701

12:12:00 PM 8/26/2016 P:\0170190\Plans\Misc\INTDET32_US27SB_SC_09.dgn

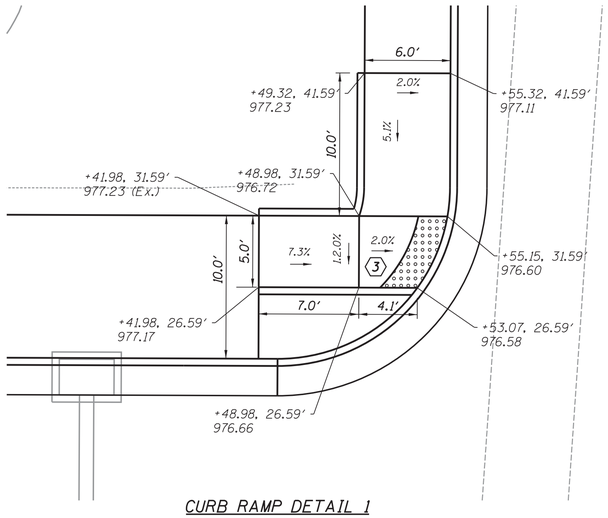

CURB RAMP DETAIL 1
Scale: 1" = 5'

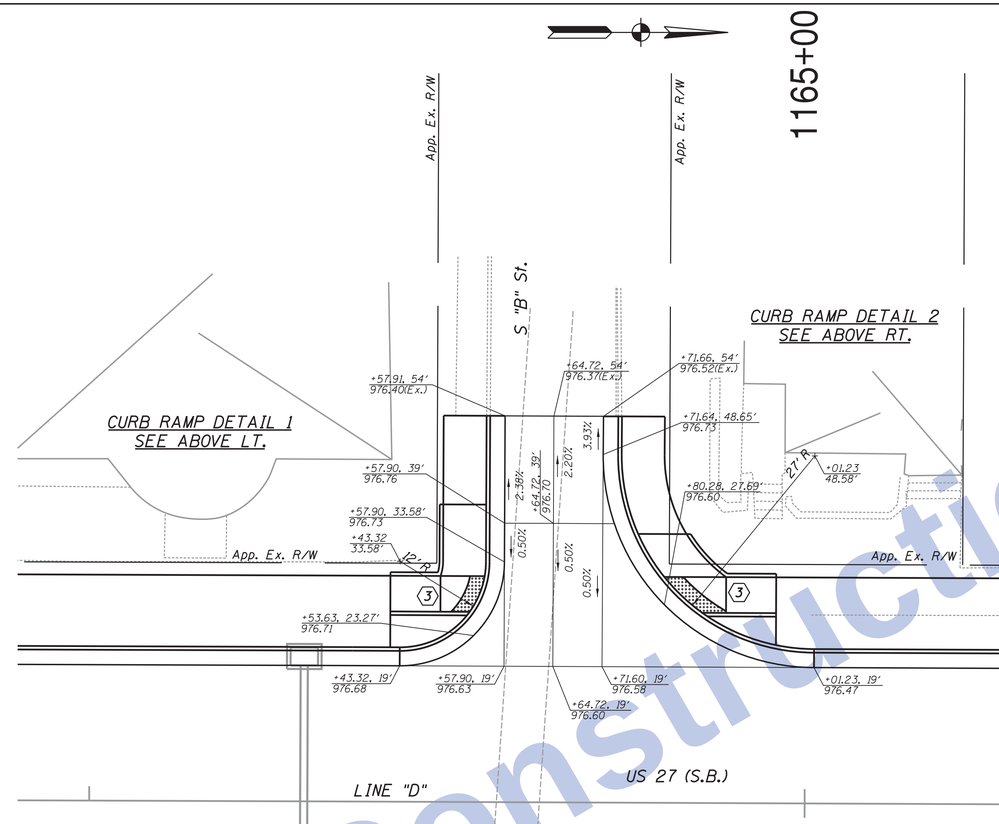

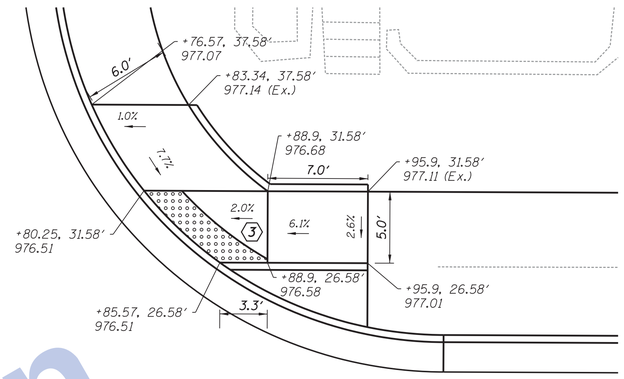

CURB RAMP DETAIL 2
Scale: 1" = 5'

LEGEND

(3) One-Way Directional Perpendicular Conc. Curb Ramp

Detectable Warning Surface, 2' Width (Typ.)

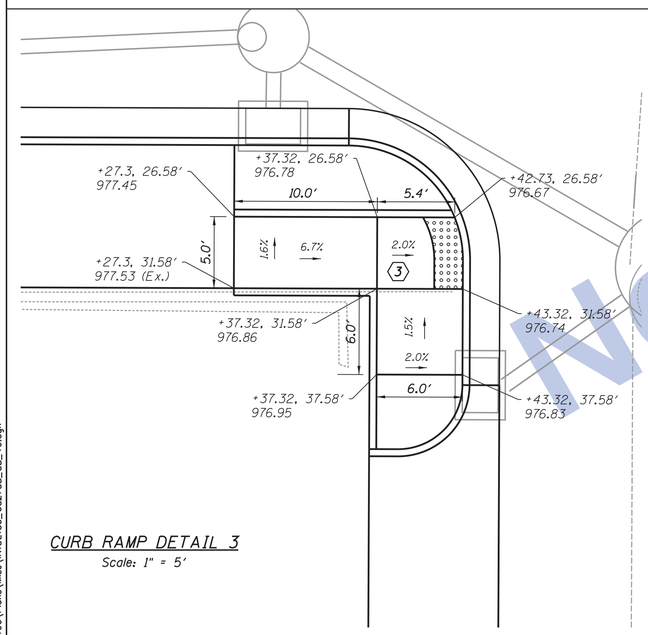

CURB RAMP DETAIL 3
Scale: 1" = 5'

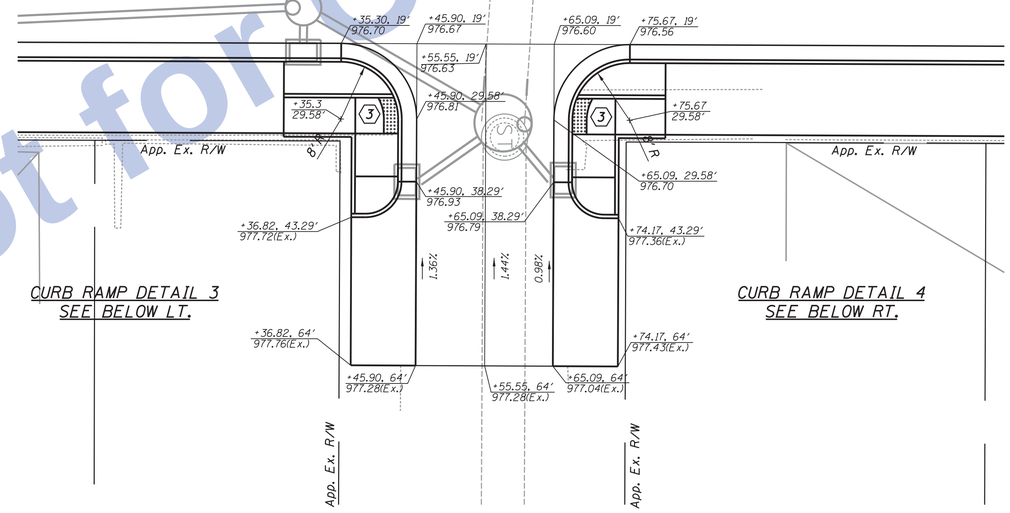

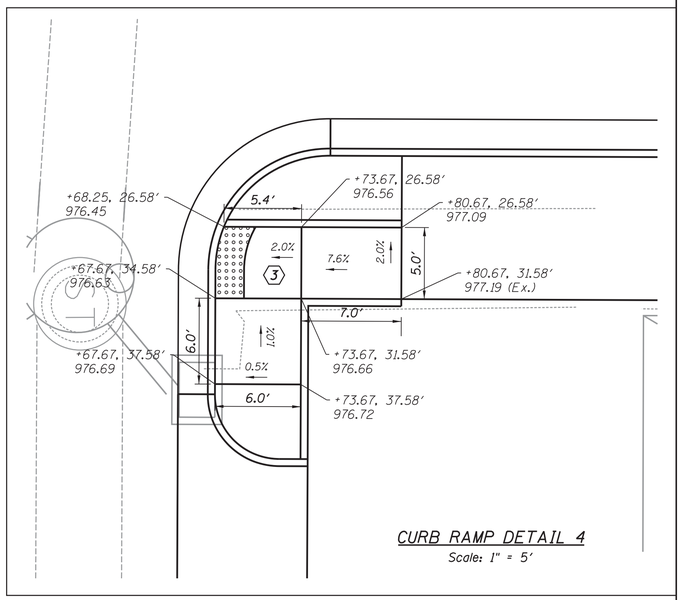

CURB RAMP DETAIL 4
Scale: 1" = 5'

ALL CALLOUTS DESCRIBED FROM LINE "D", UNLESS OTHERWISE SHOWN.

Not for Construction

Clark Dietz
ENGINEERS

RECOMMENDED FOR APPROVAL _____ DESIGN ENGINEER DATE

DESIGNED: JAL DRAWN: MP
CHECKED: RBI CHECKED: JAL

INDIANA
DEPARTMENT OF TRANSPORTATION

INTERSECTION, CURB RAMP DETAILS
&
SPOT ELEVATION

HORIZONTAL SCALE	BRIDGE FILE
1" = 10'	
VERTICAL SCALE	DESIGNATION
NONE	0100701
SURVEY BOOK	SHEETS
	135 of 278
CONTRACT	PROJECT
R-30397	0100701

12:12:02 PM 8/26/2016 P:\0170190\Plans\Misc\INTDET33_US27SB_SB_10.dgn

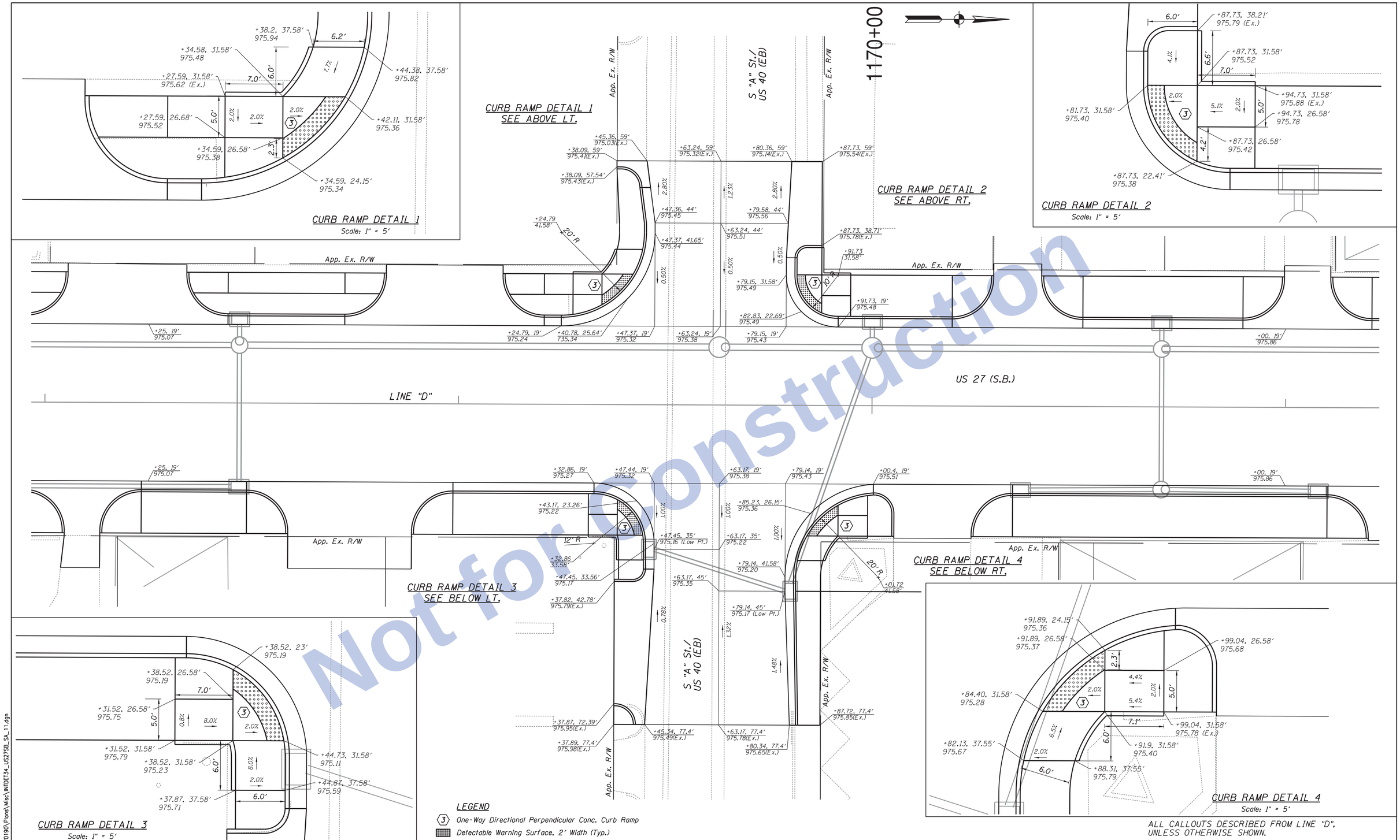

Not for Construction

Clark Dietz
ENGINEERS

RECOMMENDED FOR APPROVAL _____ DESIGN ENGINEER DATE	INDIANA DEPARTMENT OF TRANSPORTATION	HORIZONTAL SCALE 1" = 10' / VERTICAL SCALE NONE / BRIDGE FILE / DESIGNATION 0100701
DESIGNED: JAL DRAWN: MP / CHECKED: RBI CHECKED: JAL	INTERSECTION, CURB RAMP DETAILS & SPOT ELEVATION	SURVEY BOOK / CONTRACT R-30397 / SHEETS 136 of 278 / PROJECT 0100701

12:12:04 PM 8/26/2016 P:\0170190\Plans\Misc\INTDET34_US27SB_SA_11.dgn

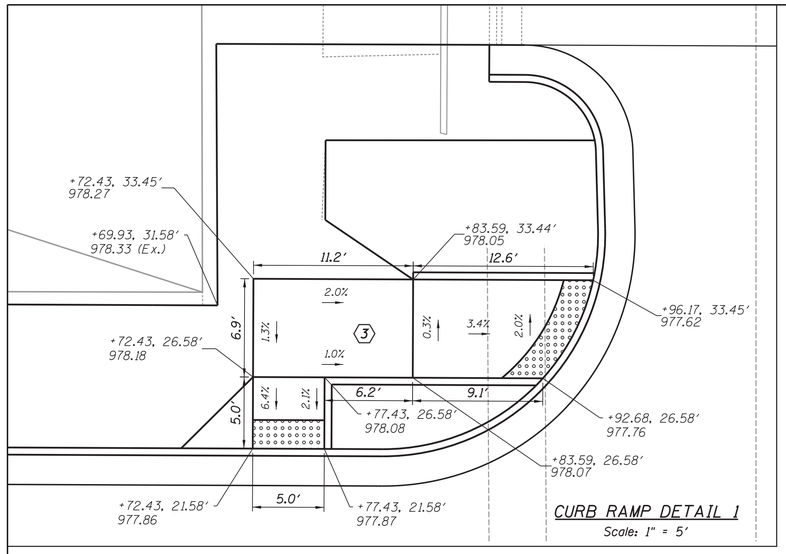

CURB RAMP DETAIL 1
Scale: 1" = 5′

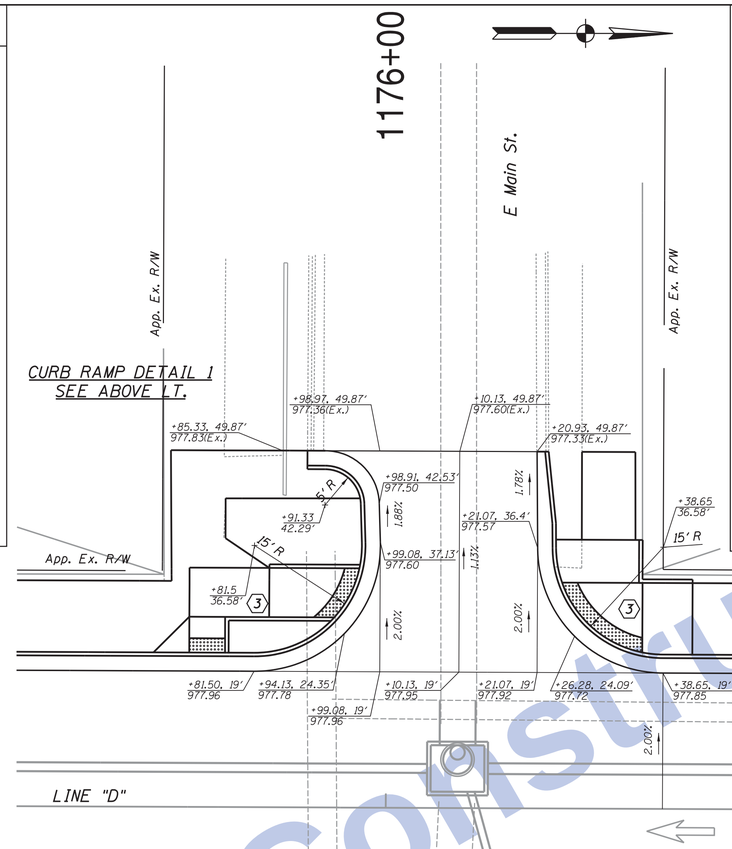

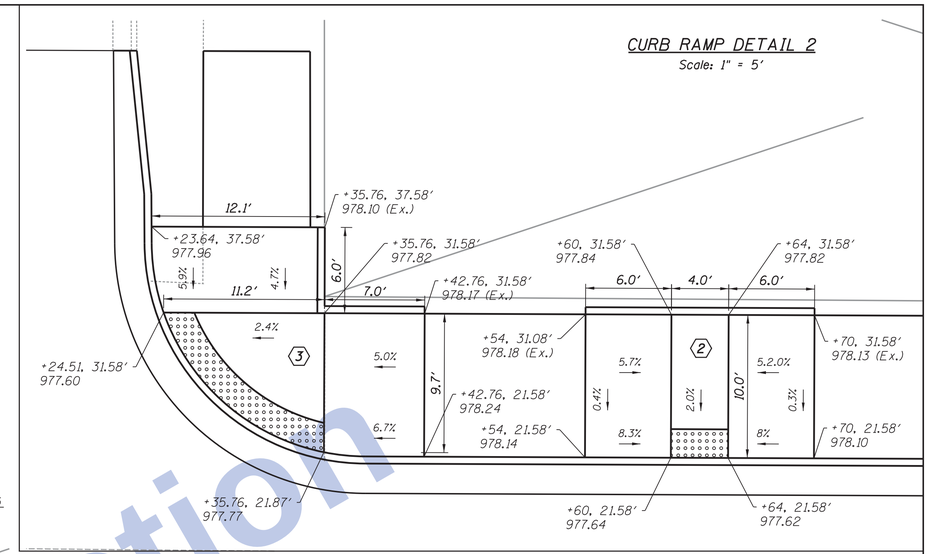

CURB RAMP DETAIL 2
SEE ABOVE RT.

LEGEND

- (2) Parallel Conc. Curb Ramp
- (3) One-Way Directional Perpendicular Conc. Curb Ramp
- Detectable Warning Surface, 2′ Width (Typ.)

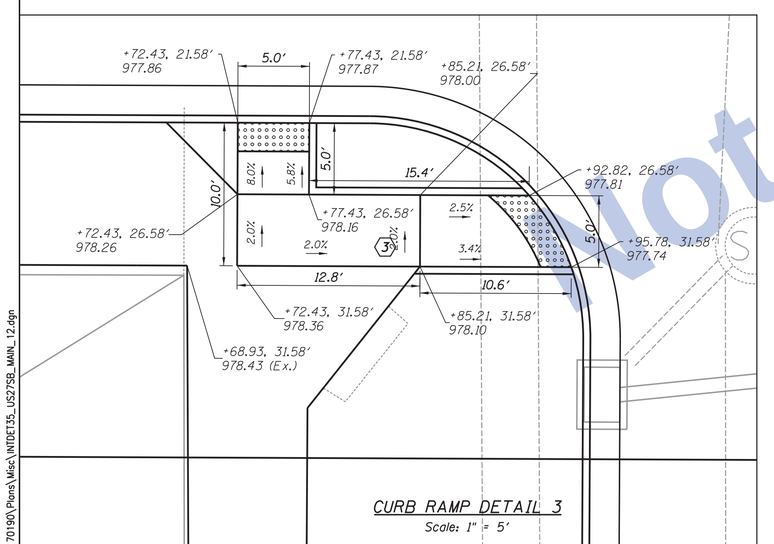

CURB RAMP DETAIL 3
Scale: 1" = 5′

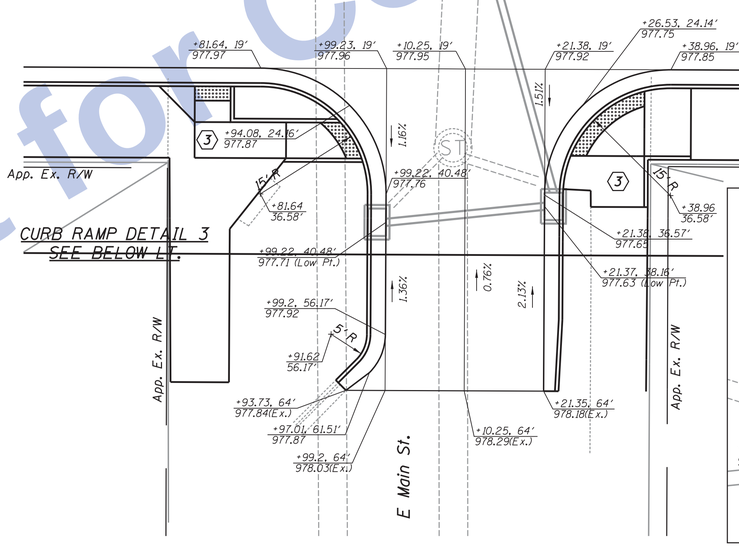

CURB RAMP DETAIL 4
SEE BELOW RT.

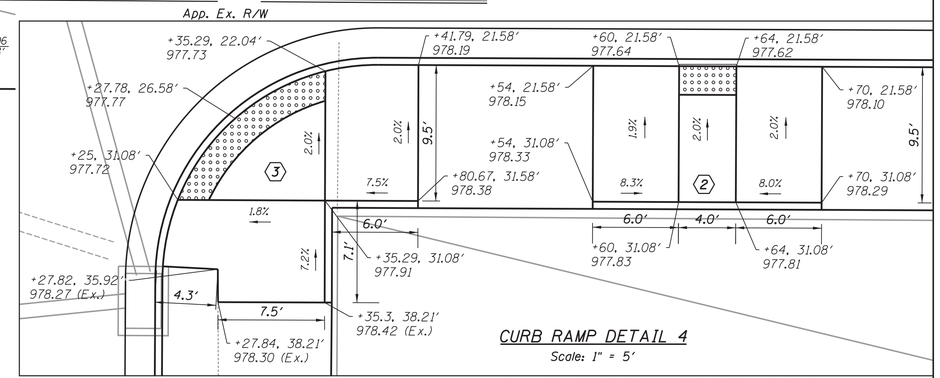

CURB RAMP DETAIL 4
Scale: 1" = 5′

ALL CALLOUTS DESCRIBED FROM LINE "D", UNLESS OTHERWISE SHOWN.

Not for Construction

Clark Dietz
ENGINEERS

RECOMMENDED FOR APPROVAL _____ DESIGN ENGINEER DATE

DESIGNED: JAL | DRAWN: MP
CHECKED: RBI | CHECKED: JAL

INDIANA
DEPARTMENT OF TRANSPORTATION

INTERSECTION, CURB RAMP DETAILS
&
SPOT ELEVATION

HORIZONTAL SCALE	BRIDGE FILE
1" = 10′	
VERTICAL SCALE	DESIGNATION
NONE	0100701
SURVEY BOOK	SHEETS
	137 of 278
CONTRACT	PROJECT
R-30397	0100701

12:12:06 PM 8/26/2016 P:\0170190\Plans\Misc\INTDET35_US27SB_MAIN_12.dgn

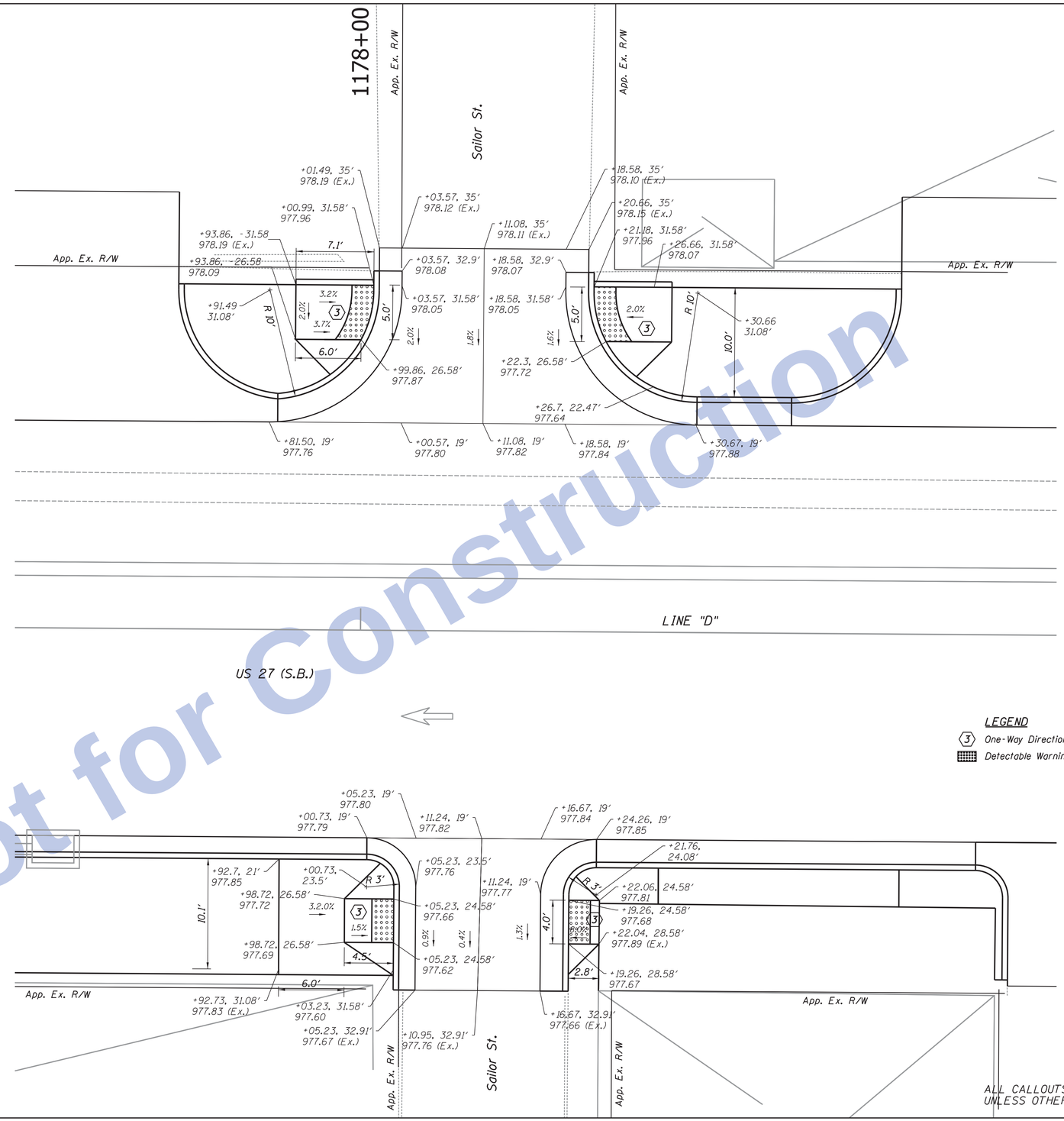

LEGEND

(3) One-Way Directional Perpendicular Conc. Curb Ramp

Detectable Warning Surface, 2' Width (Typ.)

ALL CALLOUTS DESCRIBED FROM LINE "D", UNLESS OTHERWISE SHOWN.

Not for Construction

Clark Dietz
ENGINEERS

RECOMMENDED FOR APPROVAL _____ DESIGN ENGINEER DATE

DESIGNED: JAL | DRAWN: MP
CHECKED: RBI | CHECKED: JAL

INDIANA
DEPARTMENT OF TRANSPORTATION

INTERSECTION, CURB RAMP DETAILS
&
SPOT ELEVATION

HORIZONTAL SCALE	BRIDGE FILE
1" = 5'	
VERTICAL SCALE	DESIGNATION
NONE	0100701
SURVEY BOOK	SHEETS
	138 of 278
CONTRACT	PROJECT
R-30397	0100701

12:12:07 PM 8/26/2016 P:\0170190\Plans\Misc\INTDET_US27SB_SAILOR_12A.dgn

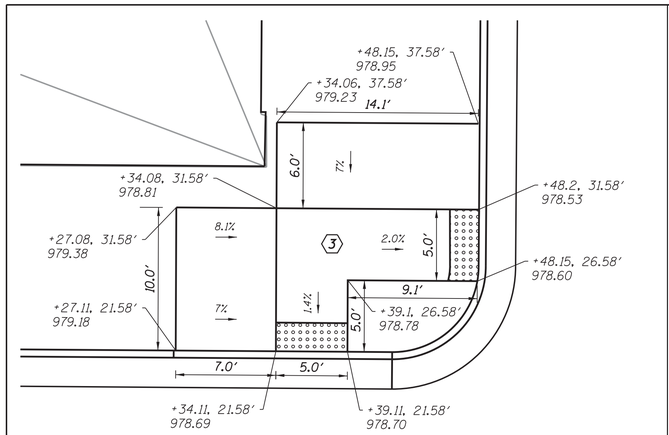

CURB RAMP DETAIL 1

Scale: 1" = 5′

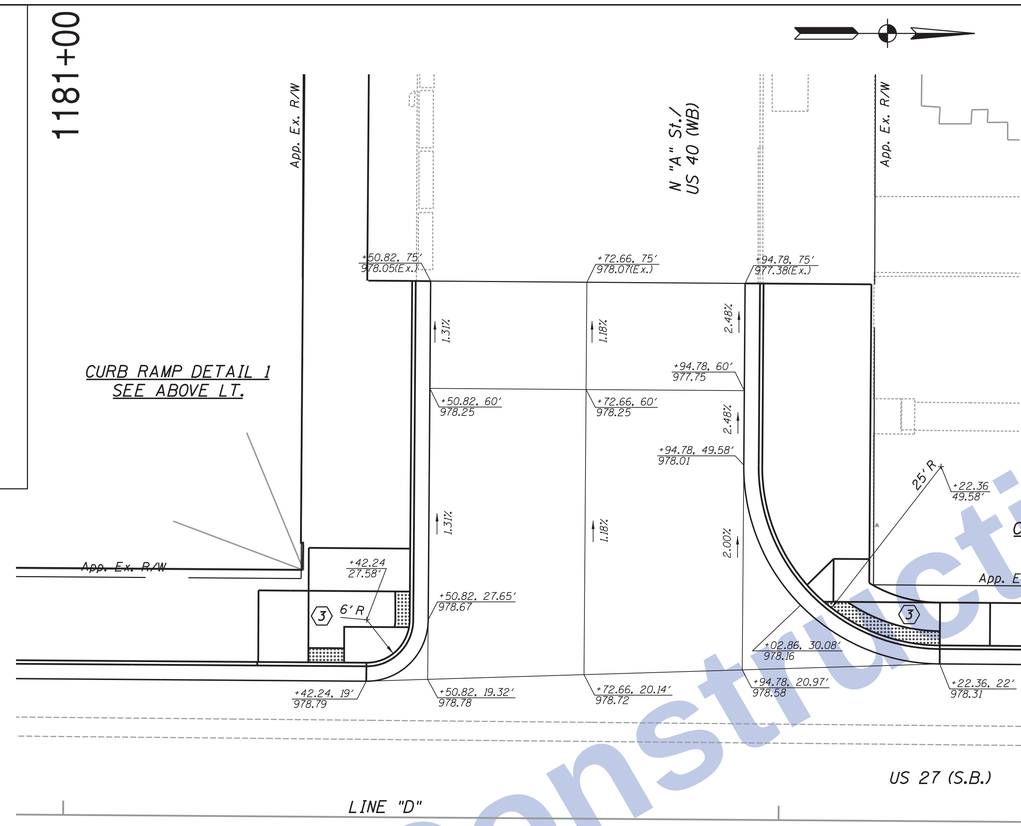

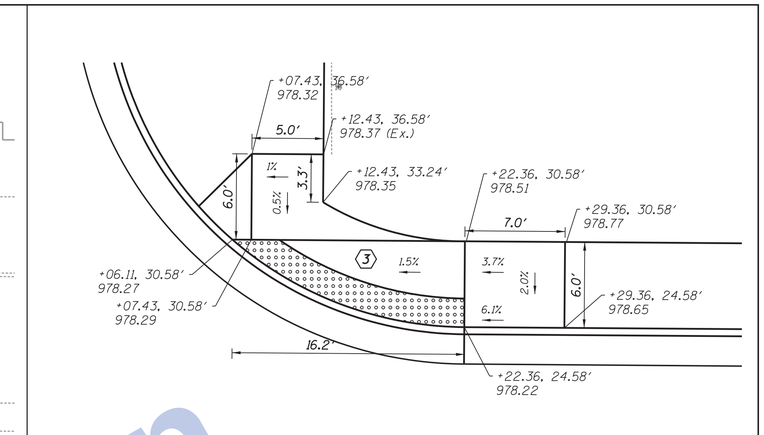

CURB RAMP DETAIL 2

Scale: 1" = 5′

CURB RAMP DETAIL 2
SEE ABOVE RT.

Not for Construction

LEGEND

(3) One-Way Directional Perpendicular Conc. Curb Ramp

Detectable Warning Surface, 2′ Width (Typ.)

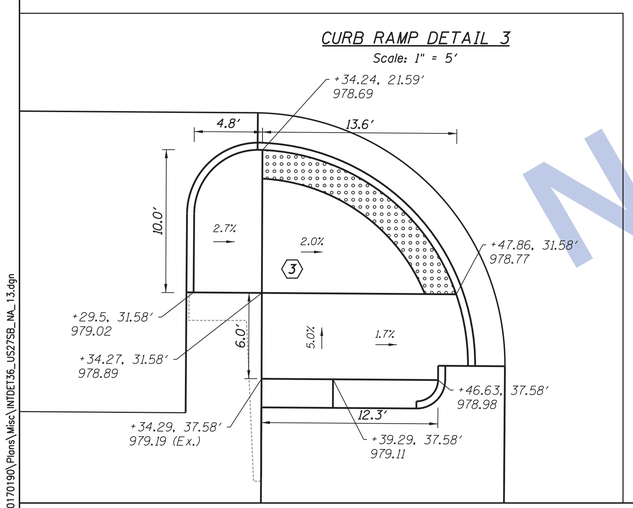

CURB RAMP DETAIL 3

Scale: 1" = 5′

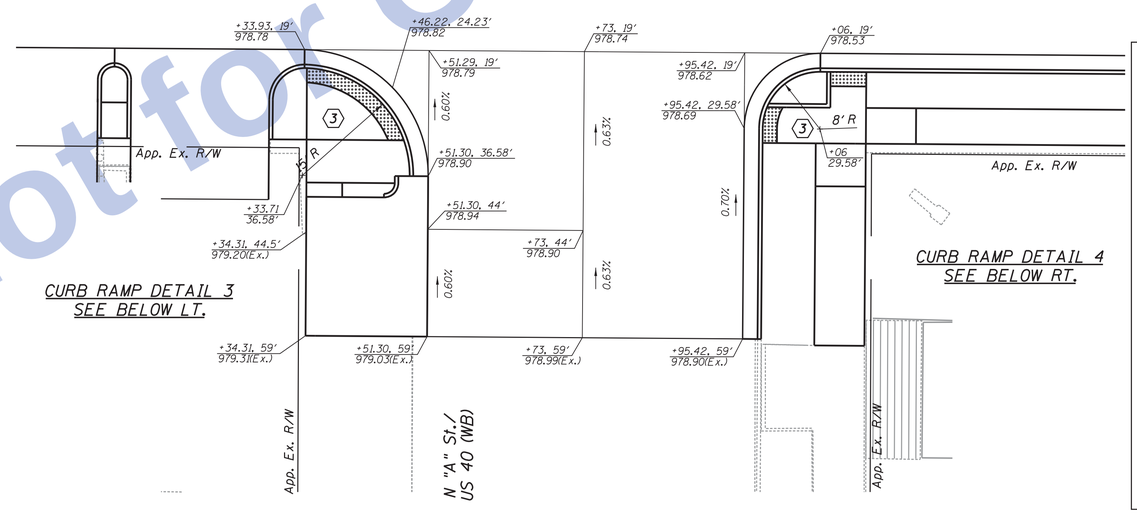

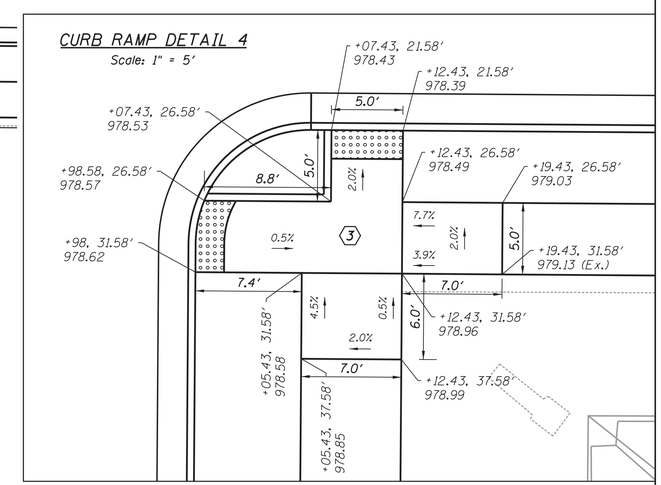

ALL CALLOUTS DESCRIBED FROM LINE "D", UNLESS OTHERWISE SHOWN.

Clark Dietz
ENGINEERS

12:12:10 PM 8/26/2016 P:\0170190\Plans\Misc\INTDET36_US27SB_NA_13.dgn

RECOMMENDED FOR APPROVAL _____ DESIGN ENGINEER DATE	INDIANA DEPARTMENT OF TRANSPORTATION	HORIZONTAL SCALE: 1" = 10′ / BRIDGE FILE:
		VERTICAL SCALE: NONE / DESIGNATION: 0100701
DESIGNED: JAL / DRAWN: MP	INTERSECTION, CURB RAMP DETAILS & SPOT ELEVATION	SURVEY BOOK: / SHEETS: 139 of 278
CHECKED: RBI / CHECKED: JAL		CONTRACT: R-30397 / PROJECT: 0100701

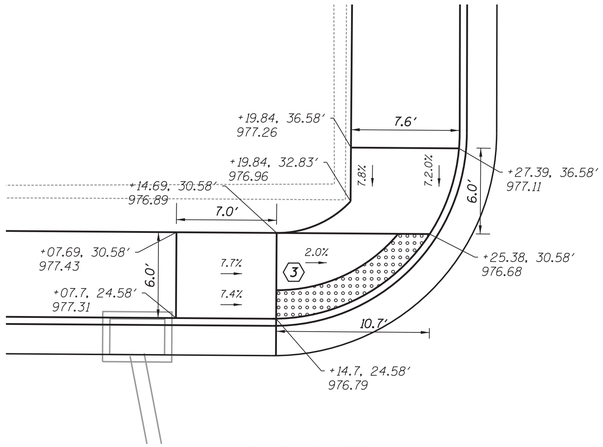

CURB RAMP DETAIL 1

Scale: 1" = 5'

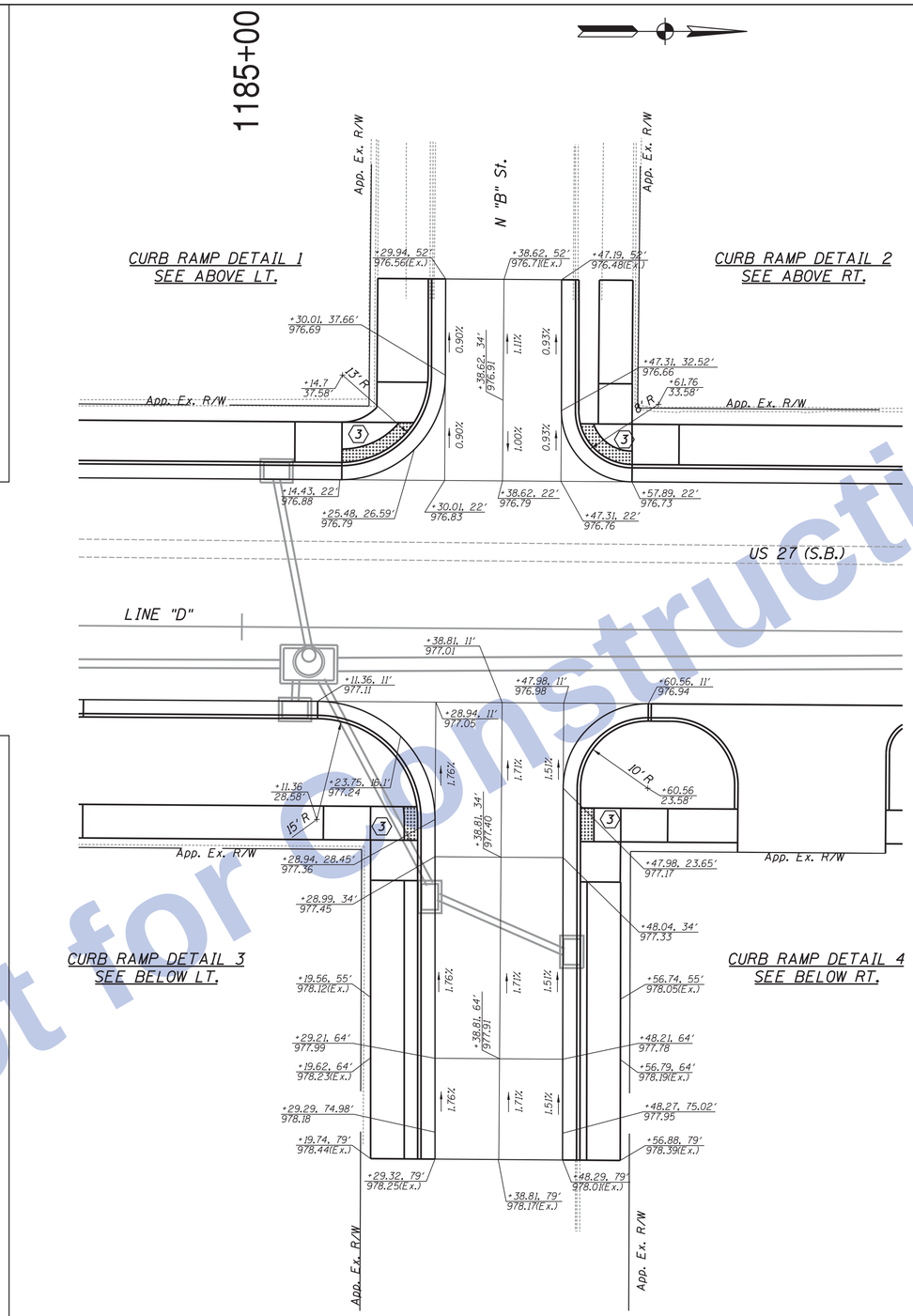

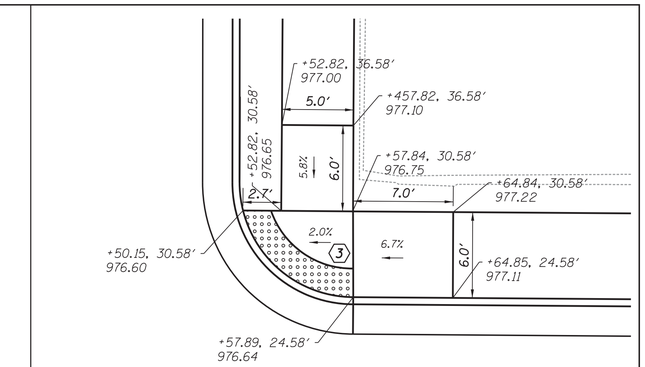

CURB RAMP DETAIL 2

Scale: 1" = 5'

LEGEND

3 One-Way Directional Perpendicular Conc. Curb Ramp

Detectable Warning Surface, 2' Width (Typ.)

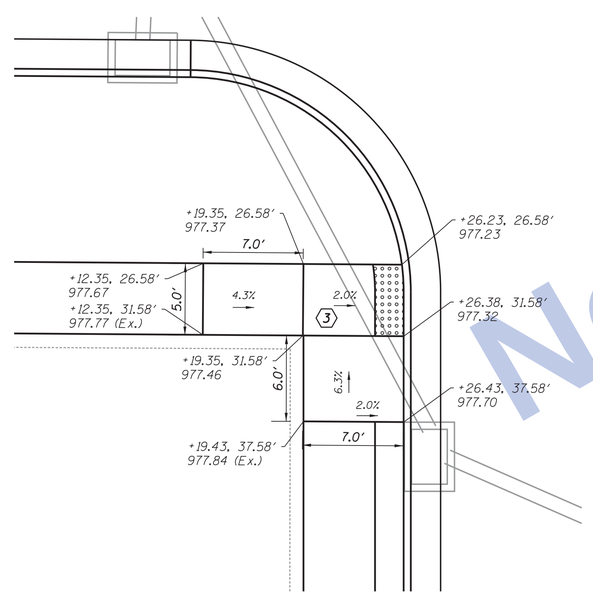

CURB RAMP DETAIL 3

Scale: 1" = 5'

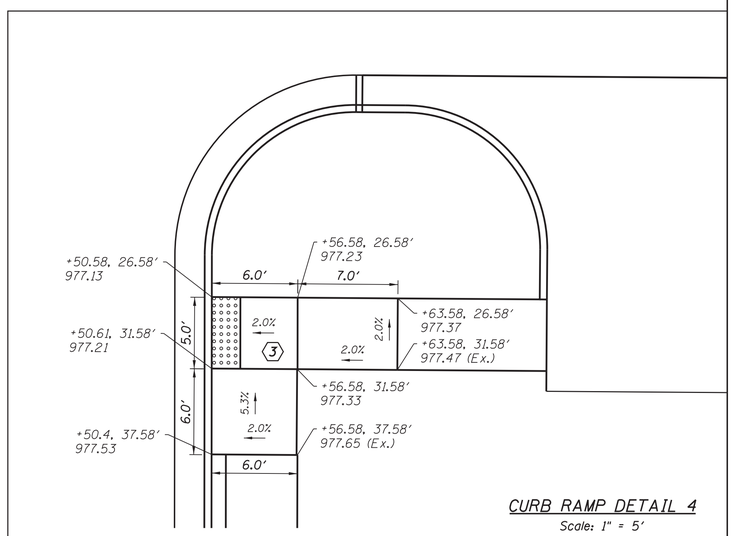

CURB RAMP DETAIL 4

Scale: 1" = 5'

ALL CALLOUTS DESCRIBED FROM LINE "D".
UNLESS OTHERWISE SHOWN.

Not for Construction

12:12:12 PM 8/26/2016 P:\0170190\Plans\Misc\INTDET37_US27SB_NB_14.dgn

Clark Dietz
ENGINEERS

RECOMMENDED FOR APPROVAL _____ DESIGN ENGINEER DATE

DESIGNED: JAL DRAWN: MP

CHECKED: RBI CHECKED: JAL

INDIANA
DEPARTMENT OF TRANSPORTATION

INTERSECTION, CURB RAMP DETAILS
&
SPOT ELEVATION

HORIZONTAL SCALE	BRIDGE FILE
1" = 10'	
VERTICAL SCALE	DESIGNATION
NONE	0100701
SURVEY BOOK	SHEETS
	140 of 278
CONTRACT	PROJECT
R-30397	0100701

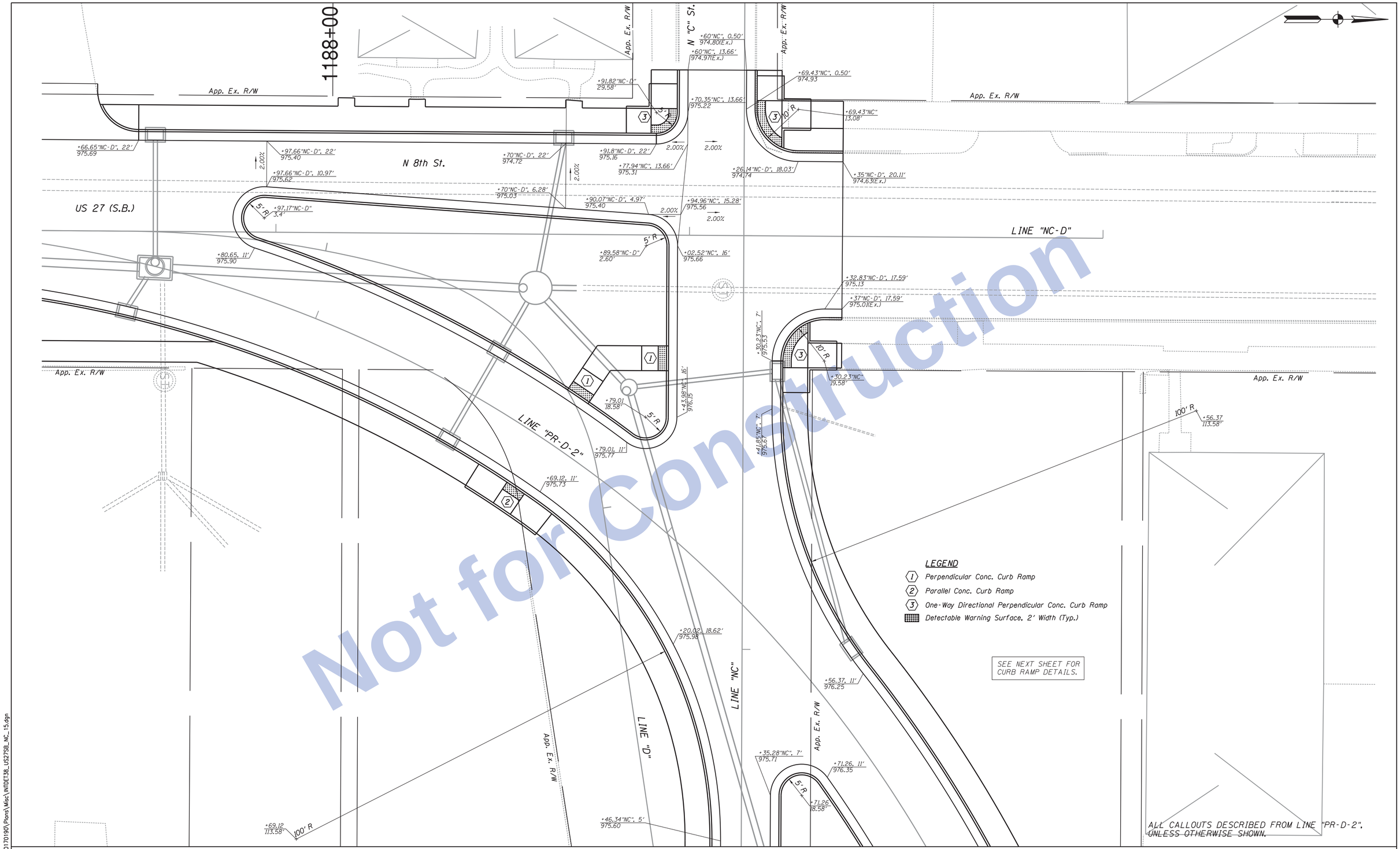

Not for Construction

Clark Dietz
ENGINEERS

RECOMMENDED FOR APPROVAL _____ DESIGN ENGINEER DATE

DESIGNED: JAL | DRAWN: MP
CHECKED: RBI | CHECKED: JAL

INDIANA
DEPARTMENT OF TRANSPORTATION

INTERSECTION, CURB RAMP DETAILS
&
SPOT ELEVATION

HORIZONTAL SCALE	BRIDGE FILE
1" = 10'	
VERTICAL SCALE	DESIGNATION
NONE	0100701
SURVEY BOOK	SHEETS
	141 of 278
CONTRACT	PROJECT
R-30397	0100701

12:12:13 PM 8/26/2016 P:\0170190\Plans\Misc\INTDET38_US27SB_NC_15.dgn

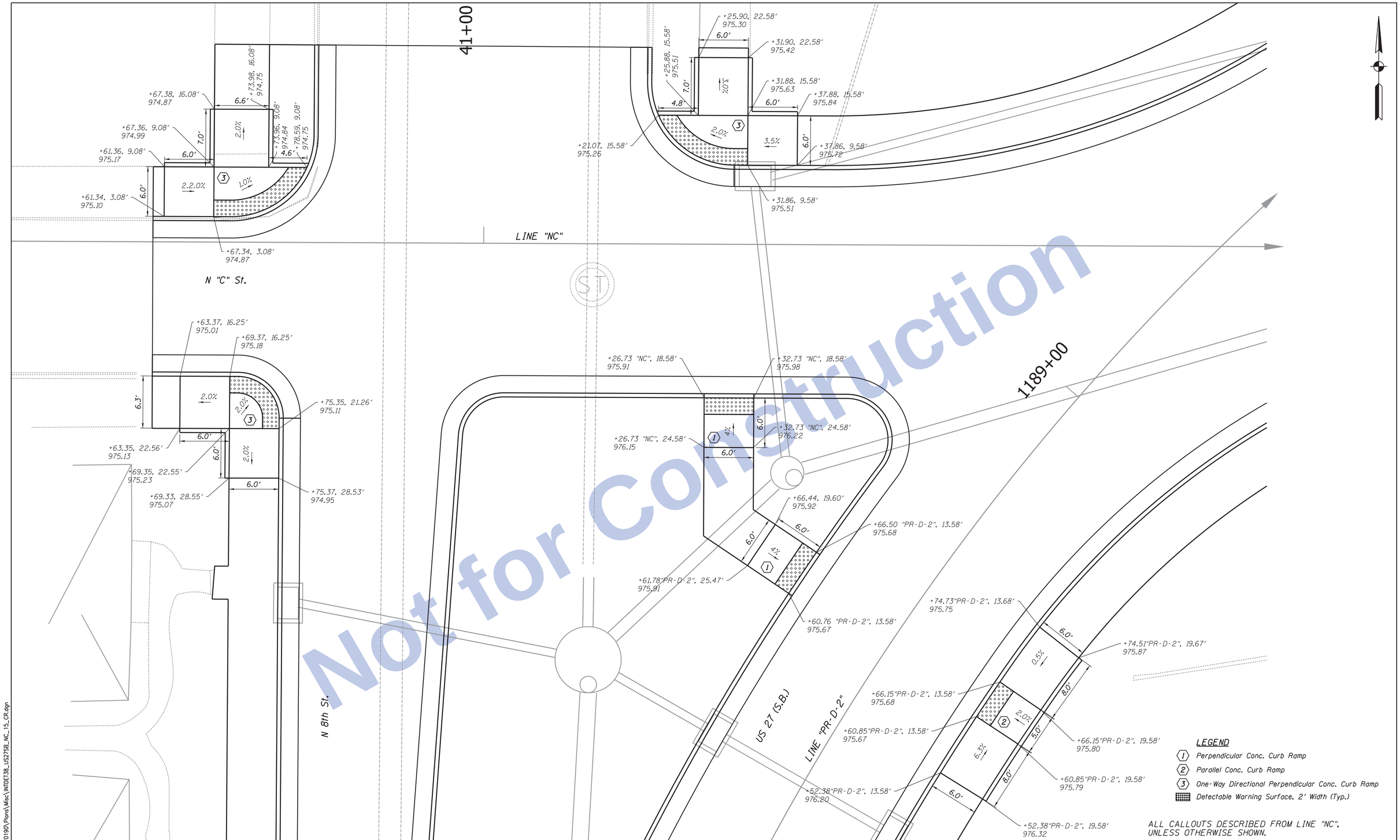

Not for Construction

Clark Dietz
ENGINEERS

RECOMMENDED FOR APPROVAL _____ DESIGN ENGINEER DATE

DESIGNED: JAL DRAWN: MP
CHECKED: RBI CHECKED: JAL

INDIANA
DEPARTMENT OF TRANSPORTATION

INTERSECTION, CURB RAMP DETAILS
&
SPOT ELEVATION

HORIZONTAL SCALE	BRIDGE FILE
1" = 5′	
VERTICAL SCALE	DESIGNATION
NONE	0100701
SURVEY BOOK	SHEETS
	142 of 278
CONTRACT	PROJECT
R-30397	0100701

12:12:16 PM 8/26/2016 P:\0170190\Plans\Misc\INTDET38_US27SB_NC_15_CR.dgn

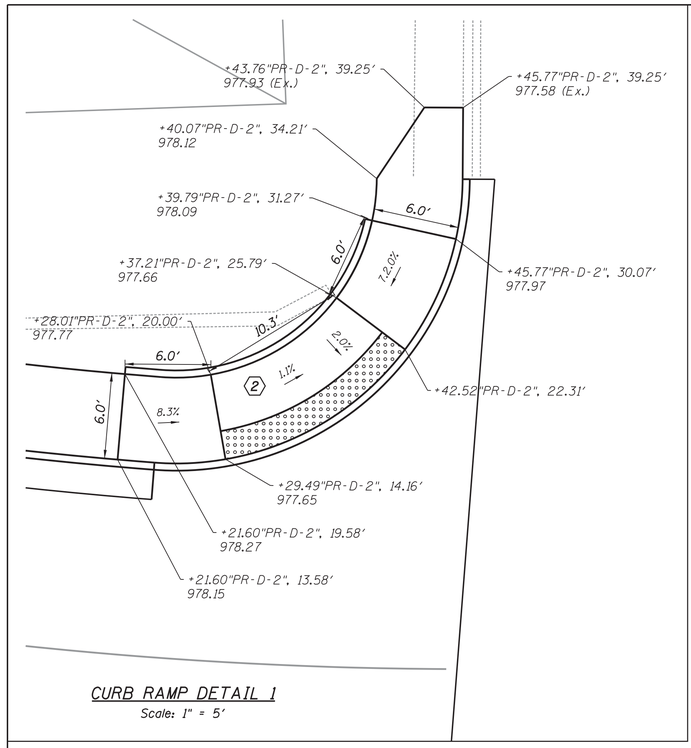

CURB RAMP DETAIL 1

Scale: 1" = 5'

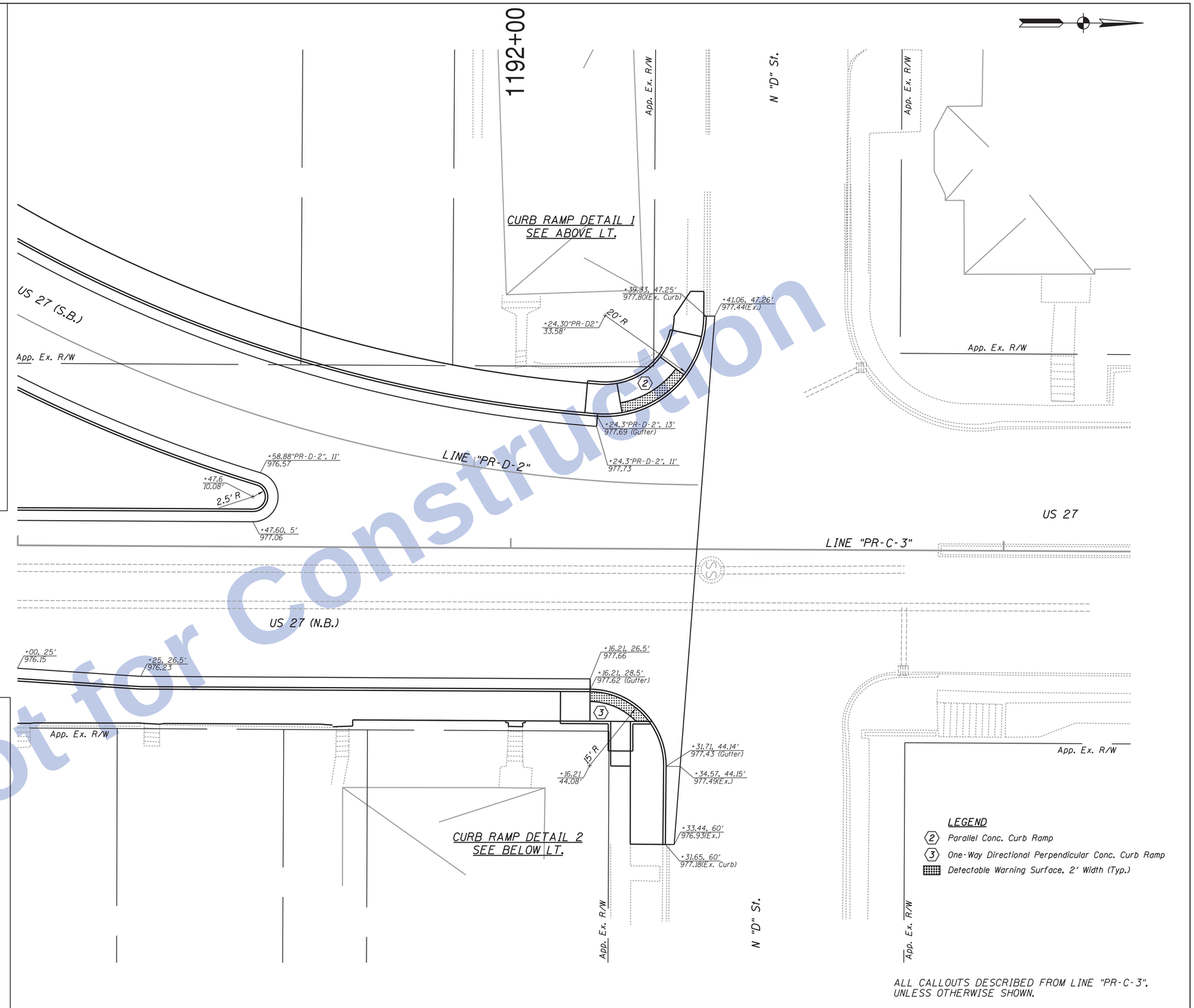

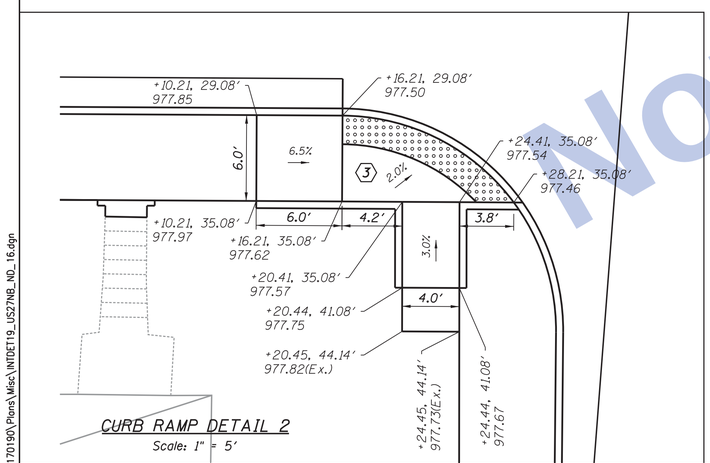

CURB RAMP DETAIL 2

Scale: 1" = 5'

LEGEND

(2) Parallel Conc. Curb Ramp

(3) One-Way Directional Perpendicular Conc. Curb Ramp

Detectable Warning Surface, 2' Width (Typ.)

ALL CALLOUTS DESCRIBED FROM LINE "PR-C-3", UNLESS OTHERWISE SHOWN.

Not for Construction

Clark Dietz
ENGINEERS

RECOMMENDED FOR APPROVAL _____ DESIGN ENGINEER DATE

DESIGNED: JAL DRAWN: MP

CHECKED: RBI CHECKED: JAL

INDIANA
DEPARTMENT OF TRANSPORTATION

INTERSECTION, CURB RAMP DETAILS
&
SPOT ELEVATION

HORIZONTAL SCALE	BRIDGE FILE
1" = 10'	
VERTICAL SCALE	DESIGNATION
NONE	0100701
SURVEY BOOK	SHEETS
	143 of 278
CONTRACT	PROJECT
R-30397	0100701

12:12:18 PM 8/26/2016 P:\0170190\Plans\Misc\INTDET19_US27NB_ND_16.dgn

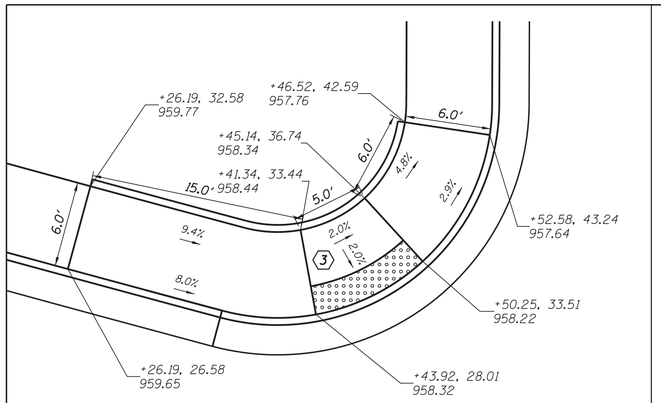

CURB RAMP DETAIL 1

Scale: 1" = 5'

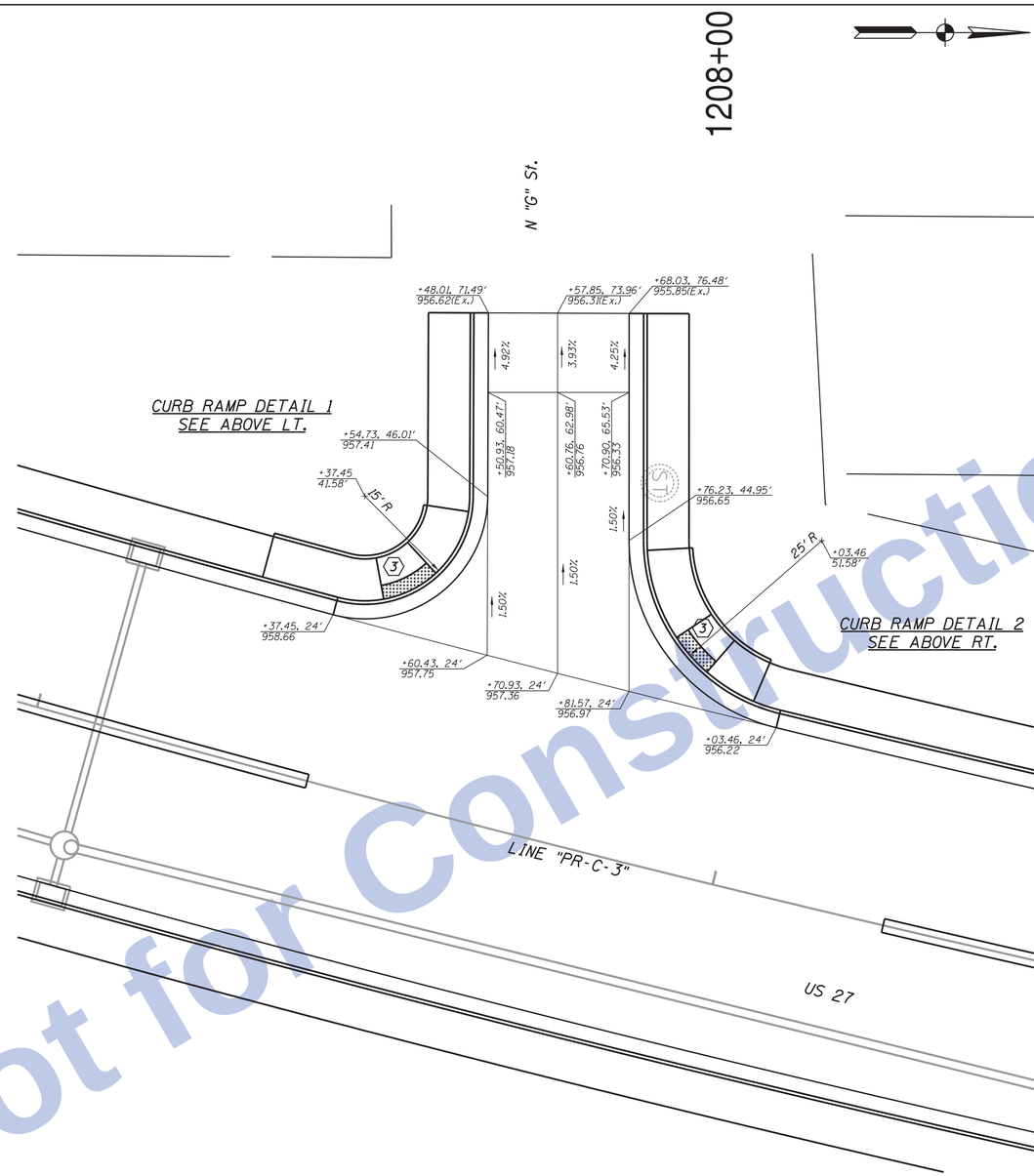

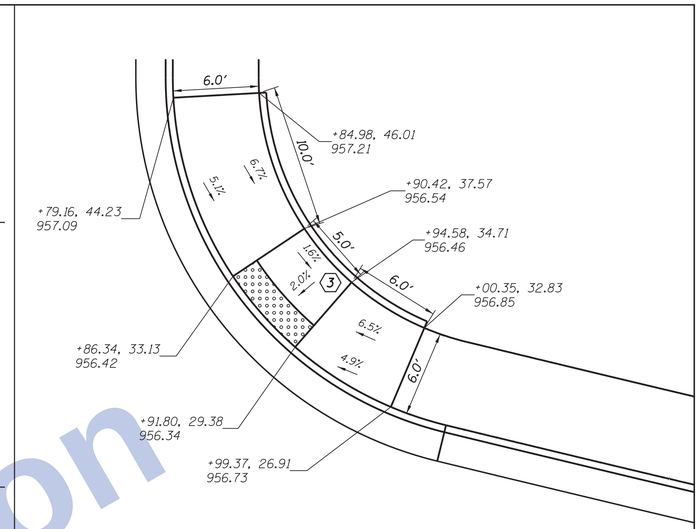

CURB RAMP DETAIL 2

Scale: 1" = 5'

Not for Construction

LEGEND

(3) One-Way Directional Perpendicular Conc. Curb Ramp

Detectable Warning Surface, 2' Width (Typ.)

ALL CALLOUTS DESCRIBED FROM LINE "PR-C-3", UNLESS OTHERWISE SHOWN.

Clark Dietz ENGINEERS

RECOMMENDED FOR APPROVAL _____ DESIGN ENGINEER DATE

DESIGNED: JAL DRAWN: MP

CHECKED: RBI CHECKED: JAL

INDIANA
DEPARTMENT OF TRANSPORTATION

INTERSECTION, CURB RAMP DETAILS
&
SPOT ELEVATION

HORIZONTAL SCALE	BRIDGE FILE
1" = 10'	
VERTICAL SCALE	DESIGNATION
NONE	0100701
SURVEY BOOK	SHEETS
	144 of 278
CONTRACT	PROJECT
R-30397	0100701

12:12:20 PM 8/26/2016 P:\0170190\Plans\Misc\INTDET20_US27_NC_17.dgn

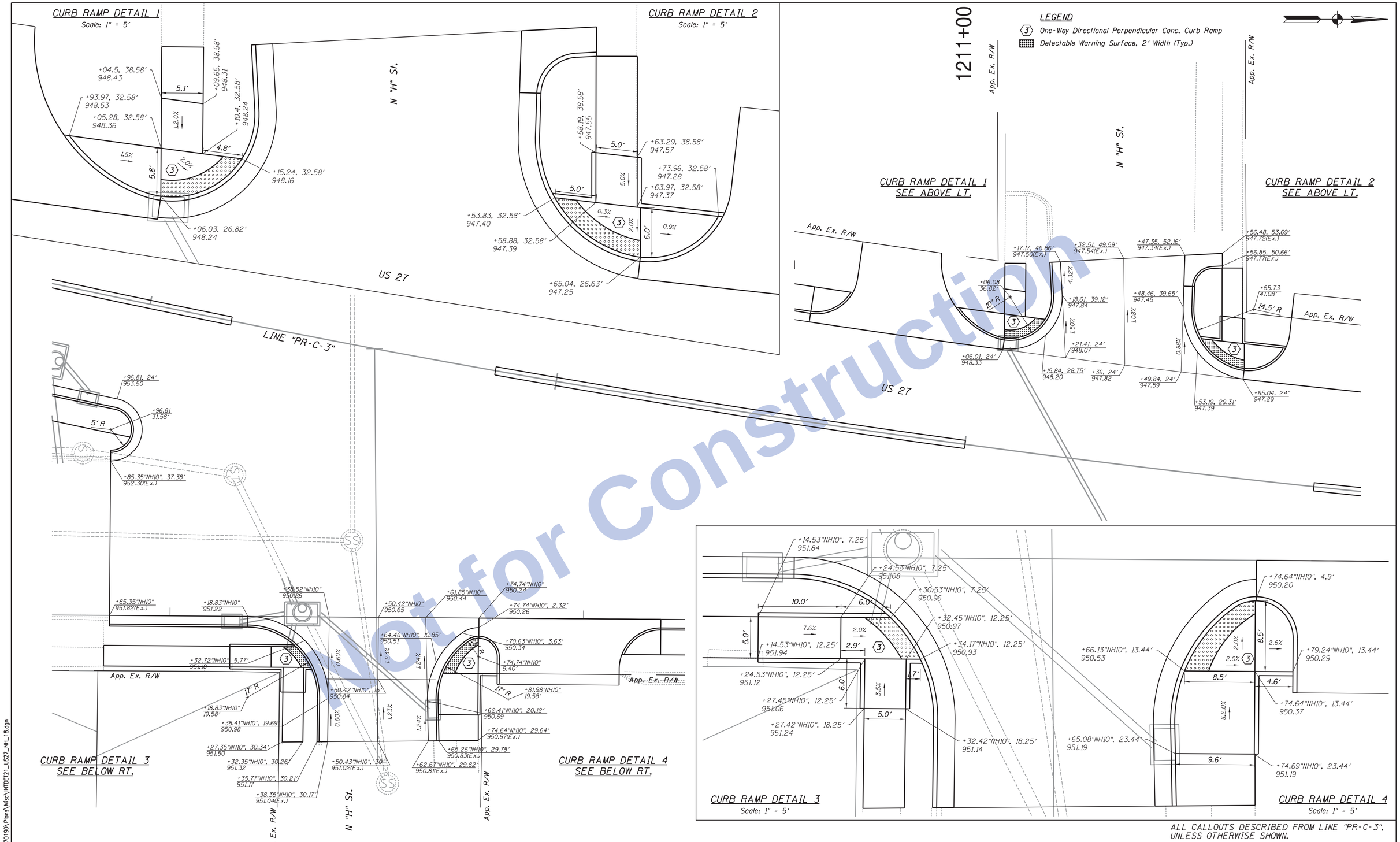

ALL CALLOUTS DESCRIBED FROM LINE "PR-C-3", UNLESS OTHERWISE SHOWN.

Not for Construction

Clark Dietz ENGINEERS

RECOMMENDED FOR APPROVAL _____ DESIGN ENGINEER DATE

DESIGNED: JAL DRAWN: MP
CHECKED: RBI CHECKED: JAL

INDIANA
DEPARTMENT OF TRANSPORTATION

INTERSECTION, CURB RAMP DETAILS
&
SPOT ELEVATION

HORIZONTAL SCALE	BRIDGE FILE
1" = 10'	
VERTICAL SCALE	DESIGNATION
NONE	0100701
SURVEY BOOK	SHEETS
	145 of 278
CONTRACT	PROJECT
R-30397	0100701

12:12:21 PM 8/26/2016 P:\0170190\Plans\Misc\INTDET21_US27_NH_18.dgn

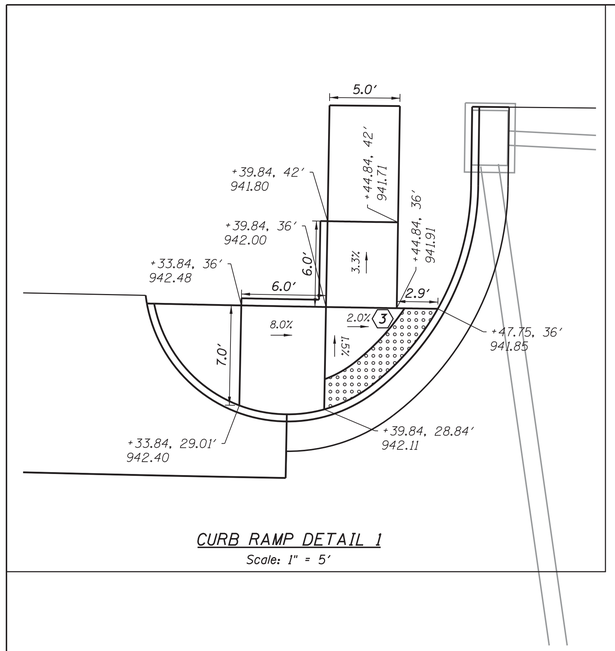

CURB RAMP DETAIL 1

Scale: 1" = 5'

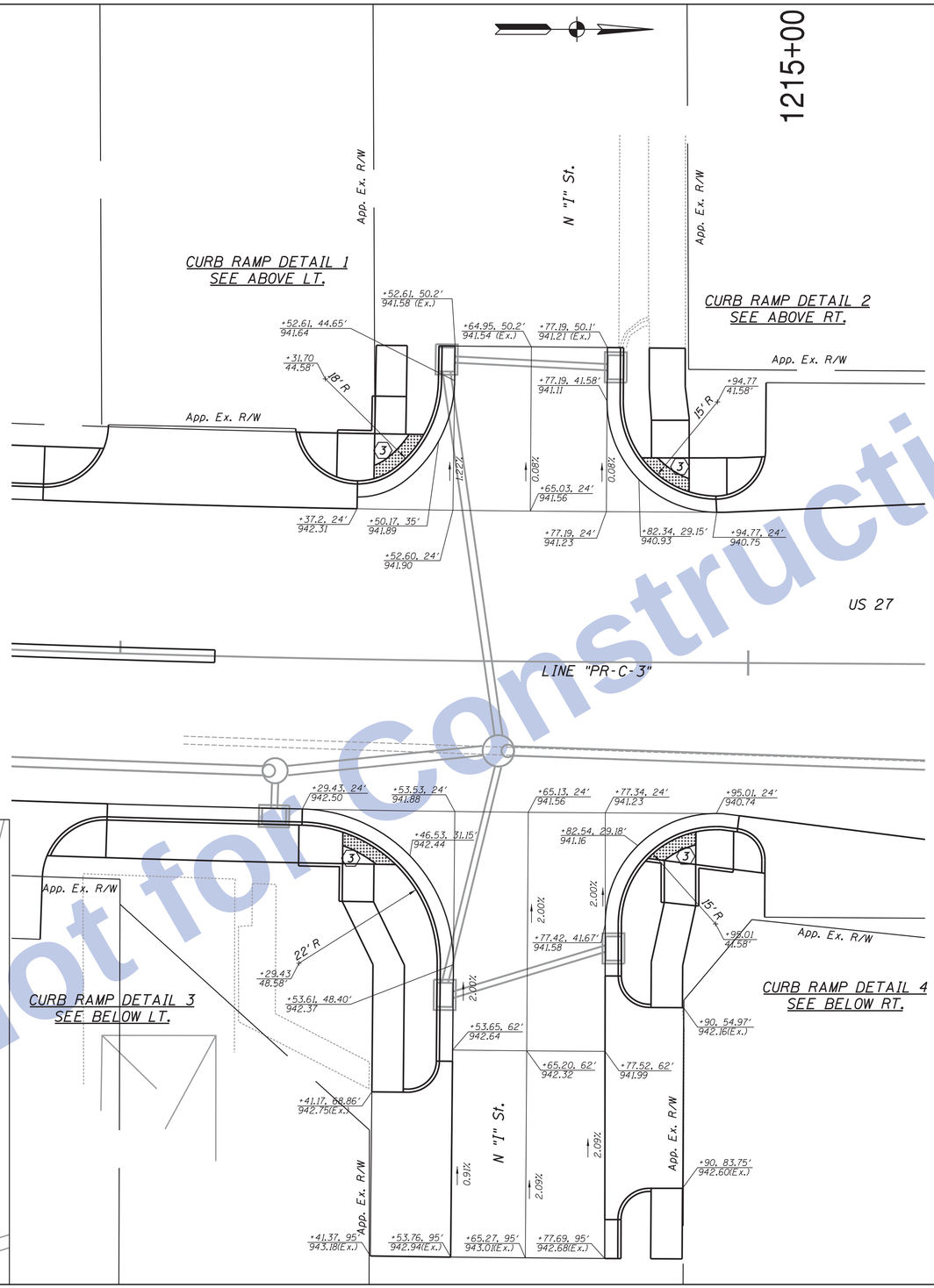

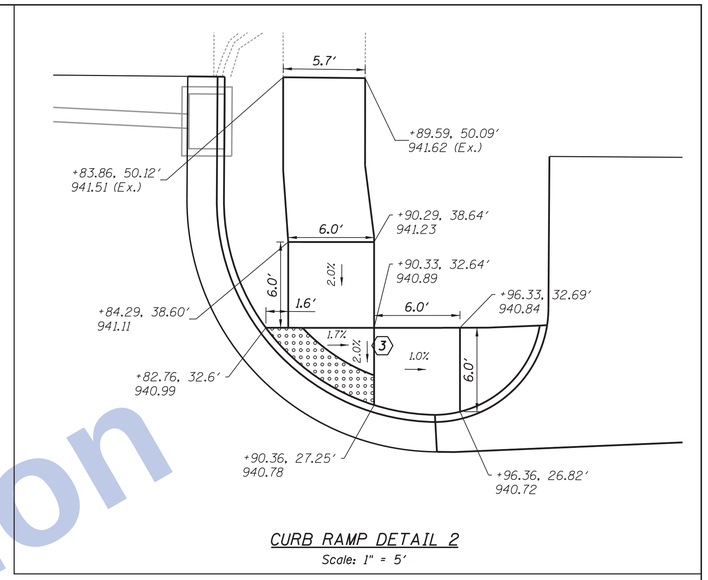

CURB RAMP DETAIL 2

Scale: 1" = 5'

LEGEND

(3) One-Way Directional Perpendicular Conc. Curb Ramp

Detectable Warning Surface, 2' Width (Typ.)

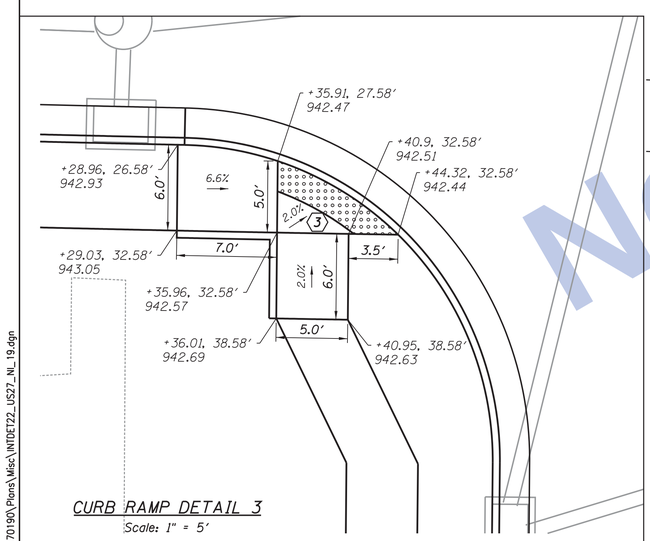

CURB RAMP DETAIL 3

Scale: 1" = 5'

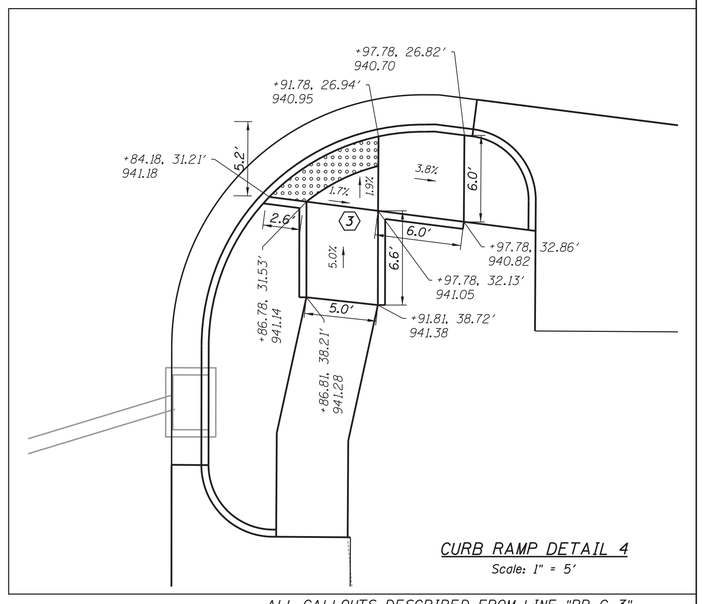

CURB RAMP DETAIL 4

Scale: 1" = 5'

ALL CALLOUTS DESCRIBED FROM LINE "PR-C-3", UNLESS OTHERWISE SHOWN.

Not for Construction

Clark Dietz ENGINEERS

RECOMMENDED FOR APPROVAL _____ DESIGN ENGINEER DATE

DESIGNED: JAL DRAWN: MP

CHECKED: RBI CHECKED: JAL

INDIANA DEPARTMENT OF TRANSPORTATION

INTERSECTION, CURB RAMP DETAILS & SPOT ELEVATION

HORIZONTAL SCALE	BRIDGE FILE
1" = 10'	
VERTICAL SCALE	DESIGNATION
NONE	0100701
SURVEY BOOK	SHEETS
	146 of 278
CONTRACT	PROJECT
R-30397	0100701

12:12:24 PM 8/26/2016 P:\0170190\Plans\Misc\INTDET22_US27_NI_19.dgn

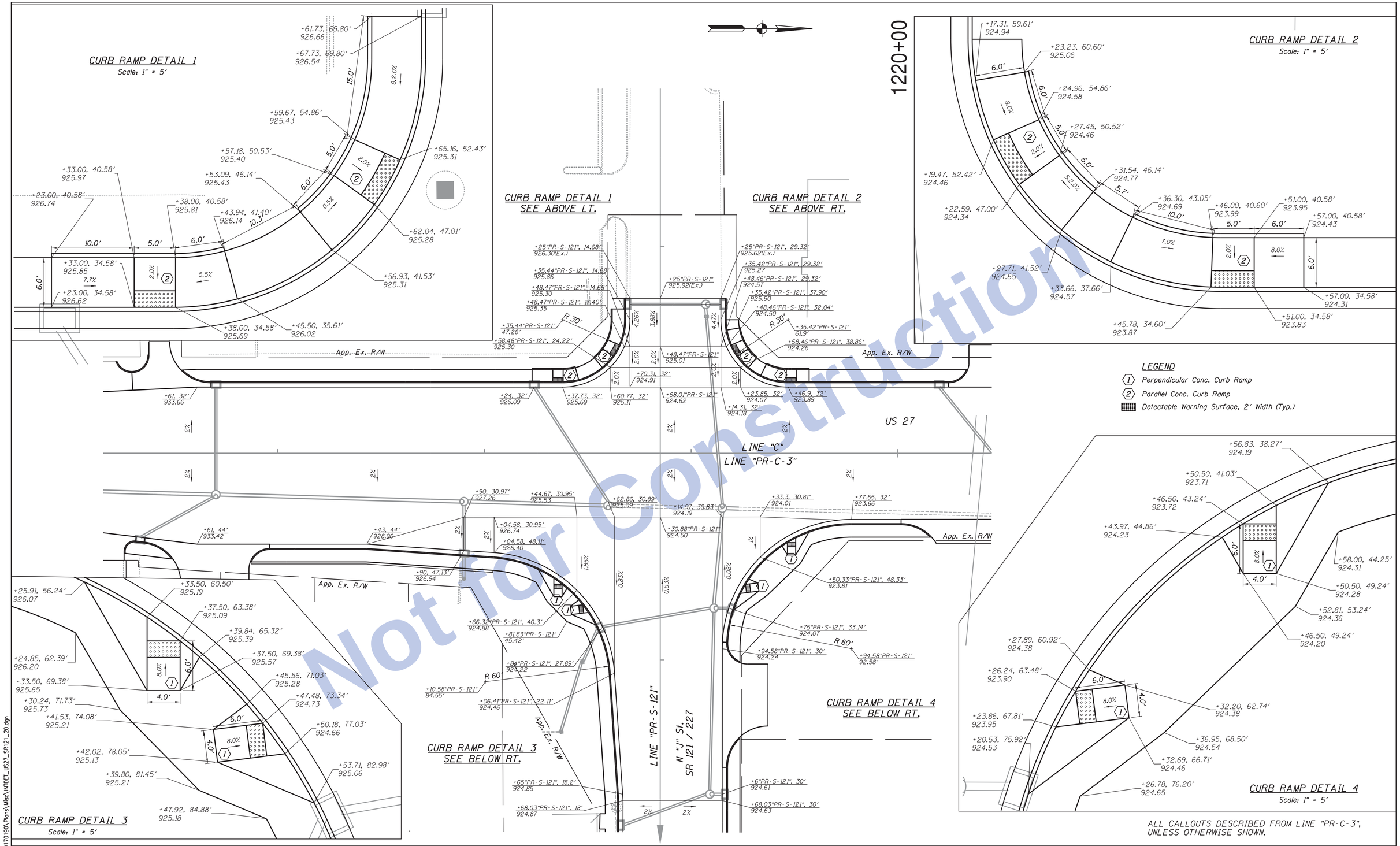

ALL CALLOUTS DESCRIBED FROM LINE "PR-C-3", UNLESS OTHERWISE SHOWN.

Not for Construction

Clark Dietz
ENGINEERS

RECOMMENDED FOR APPROVAL _____ DESIGN ENGINEER DATE

DESIGNED: JAL DRAWN: MP
CHECKED: RBI CHECKED: JAL

INDIANA
DEPARTMENT OF TRANSPORTATION

INTERSECTION, CURB RAMP DETAILS
&
SPOT ELEVATION

HORIZONTAL SCALE	BRIDGE FILE
1" = 20'	
VERTICAL SCALE	DESIGNATION
NONE	0100701
SURVEY BOOK	SHEETS
	147 of 278
CONTRACT	PROJECT
R-30397	0100701

12:12:26 PM 8/26/2016 P:\0170190\Plans\Misc\INTDET_US27_SR121_20.dgn

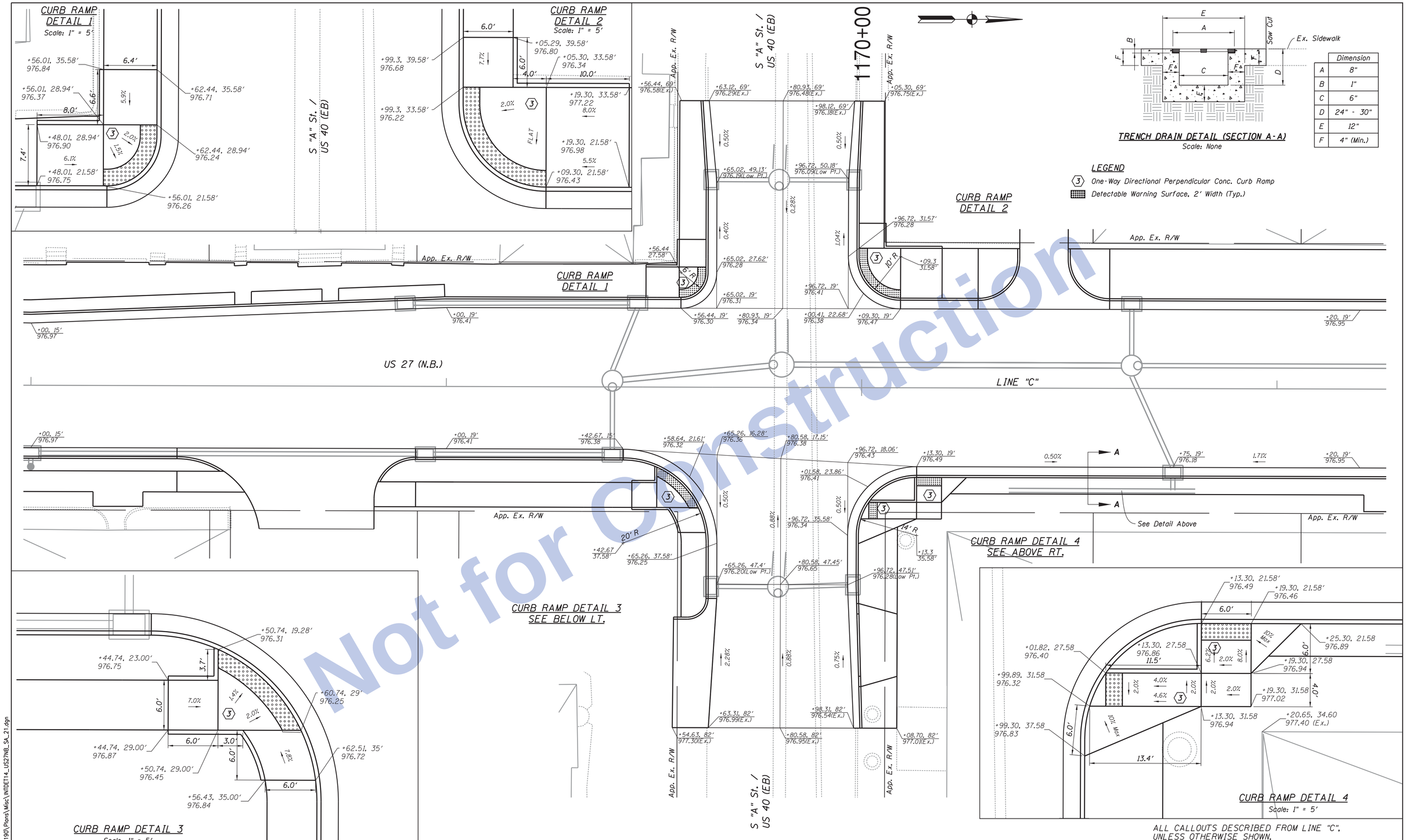

	Dimension
A	8"
B	1"
C	6"
D	24" - 30"
E	12"
F	4" (Min.)

Not for Construction

Clark Dietz
ENGINEERS

RECOMMENDED FOR APPROVAL _____ DESIGN ENGINEER DATE

DESIGNED: JAL DRAWN: MP
CHECKED: RBI CHECKED: JAL

INDIANA
DEPARTMENT OF TRANSPORTATION

INTERSECTION, CURB RAMP DETAILS
&
SPOT ELEVATION

HORIZONTAL SCALE	BRIDGE FILE
1" = 10'	
VERTICAL SCALE	DESIGNATION
NONE	0100701
SURVEY BOOK	SHEETS
	148 of 278
CONTRACT	PROJECT
R-30397	0100701

12:12:28 PM 8/26/2016 P:\0170190\Plans\Misc\INTDET14_US27NB_SA_21.dgn

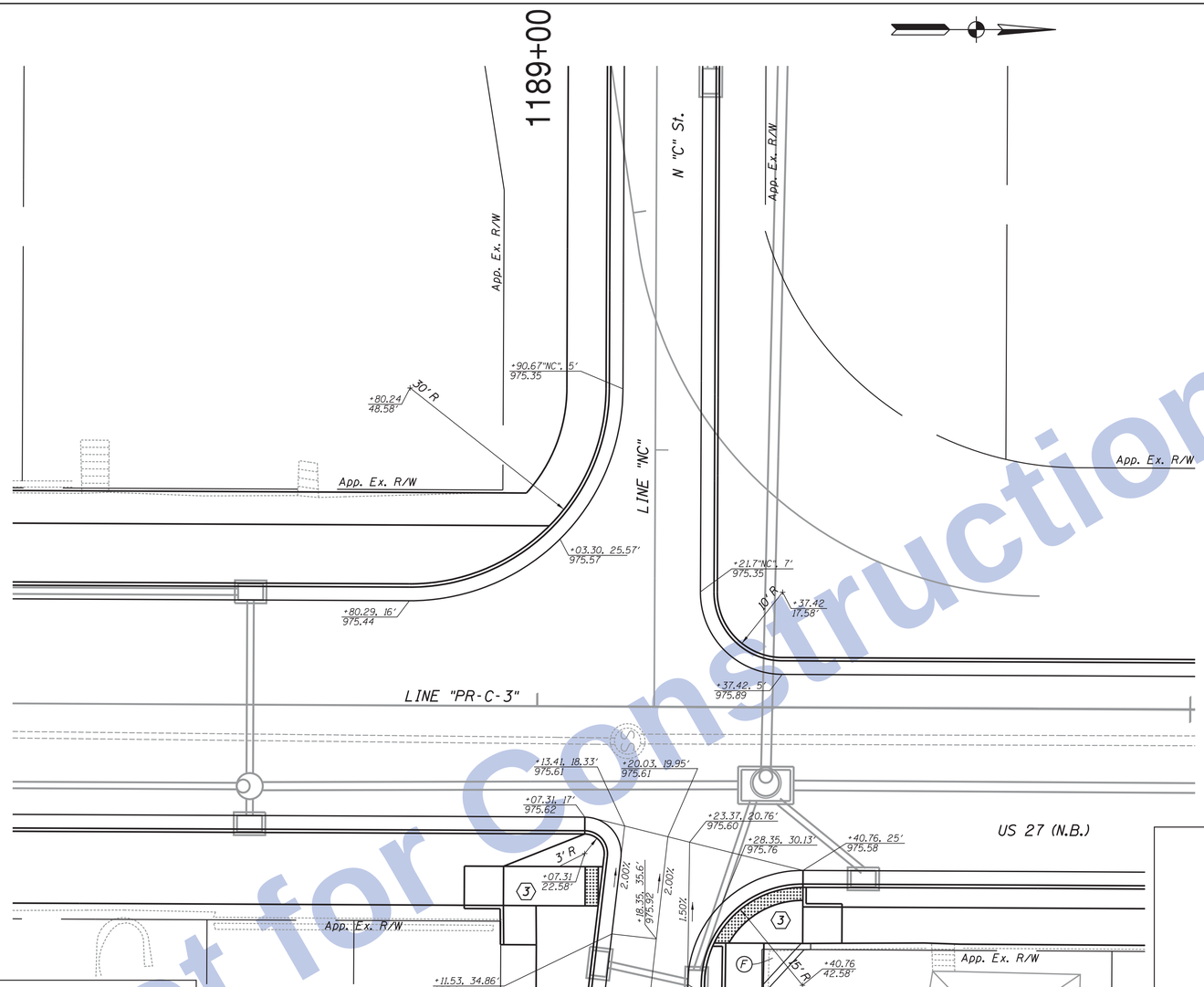

CURB RAMP DETAIL 1
SEE BELOW LT.

CURB RAMP DETAIL 2
SEE BELOW RT.

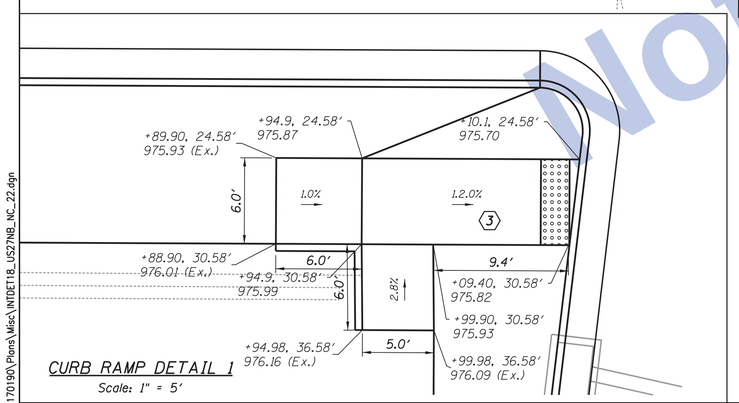

CURB RAMP DETAIL 1
Scale: 1" = 5'

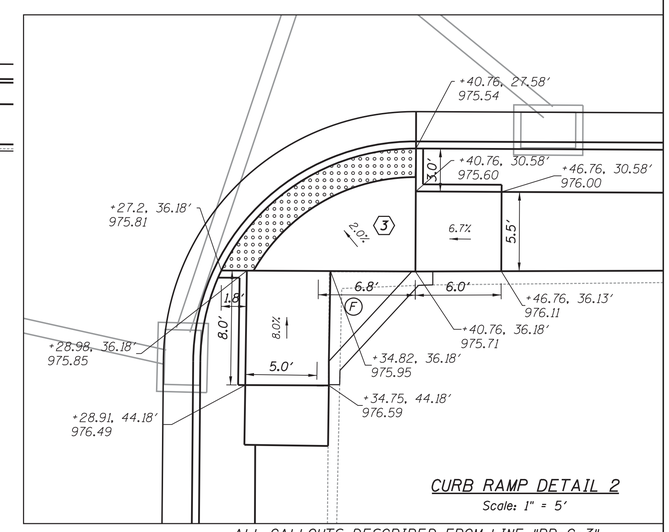

CURB RAMP DETAIL 2
Scale: 1" = 5'

ALL CALLOUTS DESCRIBED FROM LINE "PR-C-3", UNLESS OTHERWISE SHOWN.

LEGEND

(3) One-Way Directional Perpendicular Conc. Curb Ramp

Detectable Warning Surface, 2' Width (Typ.)

(F) Sidewalk, Concrete

Not for Construction

12:12:29 PM 8/26/2016 P:\0170190\Plans\Misc\INTDET18_US27NB_NC_22.dgn

Clark Dietz
ENGINEERS

RECOMMENDED FOR APPROVAL _____ DESIGN ENGINEER DATE

DESIGNED: JAL DRAWN: MP
CHECKED: RBI CHECKED: JAL

INDIANA
DEPARTMENT OF TRANSPORTATION

INTERSECTION, CURB RAMP DETAILS
&
SPOT ELEVATION

HORIZONTAL SCALE	BRIDGE FILE
1" = 10'	
VERTICAL SCALE	DESIGNATION
NONE	0100701
SURVEY BOOK	SHEETS
	149 of 278
CONTRACT	PROJECT
R-30397	0100701

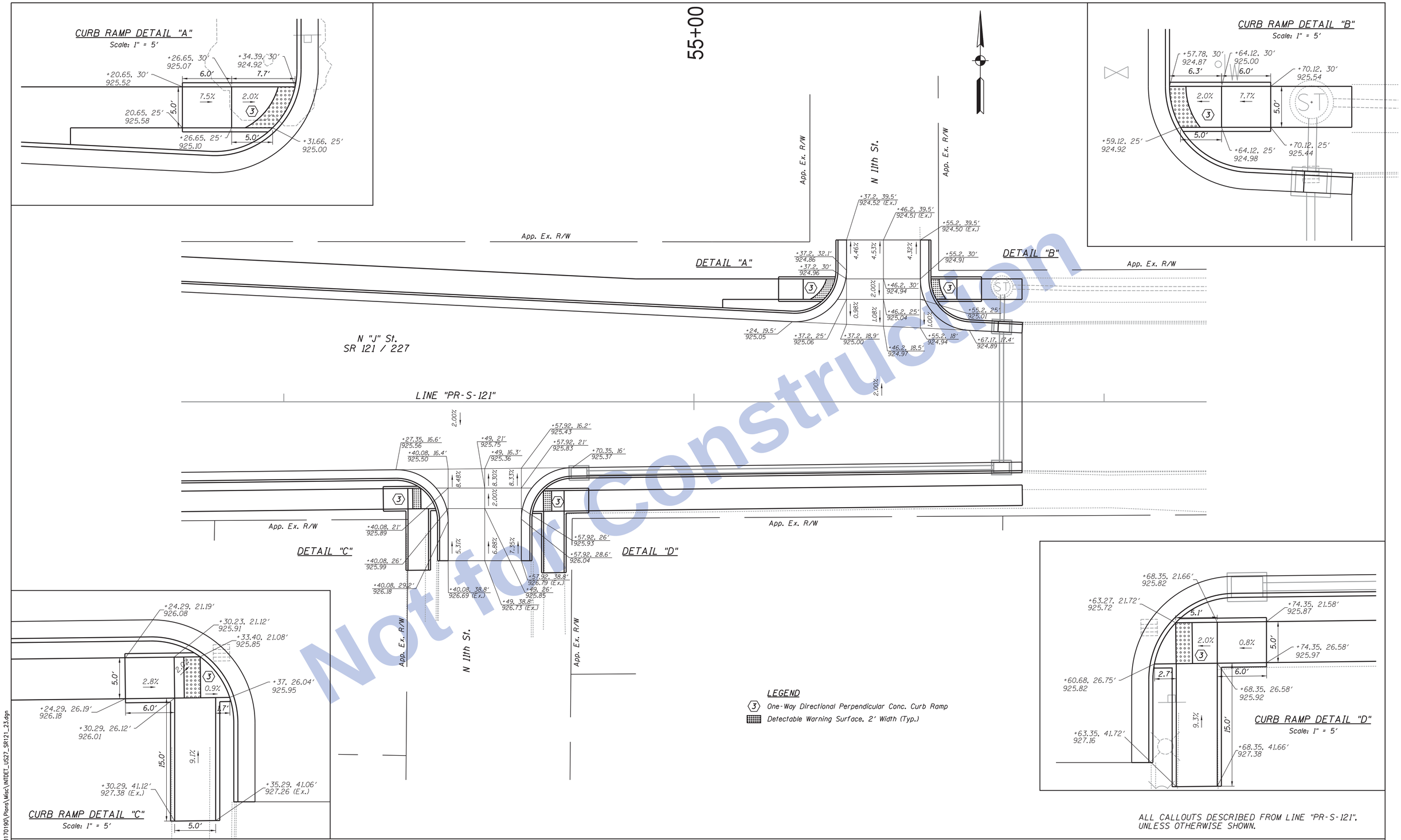

ALL CALLOUTS DESCRIBED FROM LINE "PR-S-121", UNLESS OTHERWISE SHOWN.

Not for Construction

Clark Dietz
ENGINEERS

RECOMMENDED FOR APPROVAL _____ DESIGN ENGINEER DATE

DESIGNED: JAL | DRAWN: MP
CHECKED: RBI | CHECKED: JAL

INDIANA
DEPARTMENT OF TRANSPORTATION

INTERSECTION, CURB RAMP DETAILS
&
SPOT ELEVATION

HORIZONTAL SCALE	BRIDGE FILE
1" = 10'	
VERTICAL SCALE	DESIGNATION
NONE	0100701
SURVEY BOOK	SHEETS
	150 of 278
CONTRACT	PROJECT
R-30397	0100701

12:12:31 PM 8/26/2016 P:\0170190\Plans\Misc\INTDET_US27_SR121_23.dgn

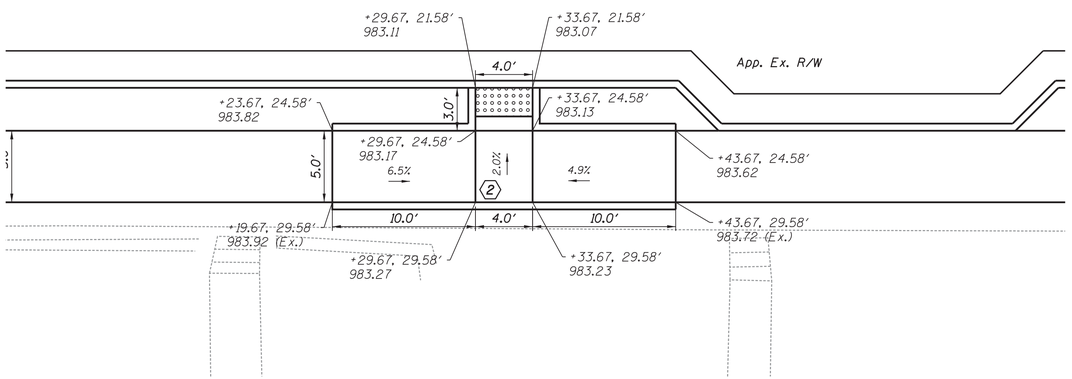

CURB RAMP DETAIL

STA. 1129+32"D" RT

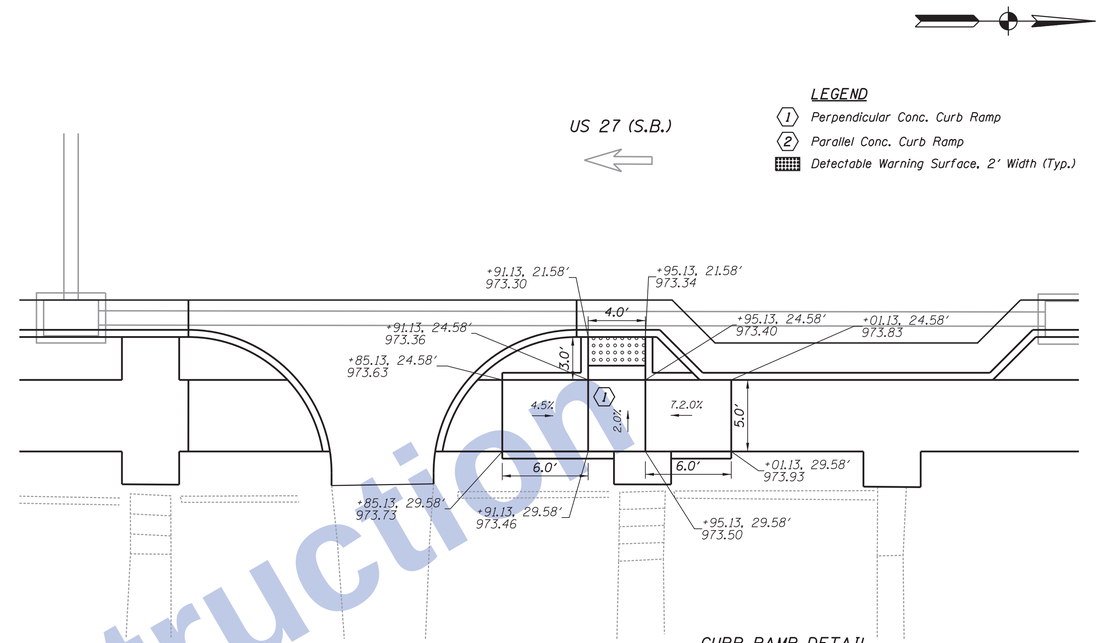

CURB RAMP DETAIL

STA. 1135+93"D" RT

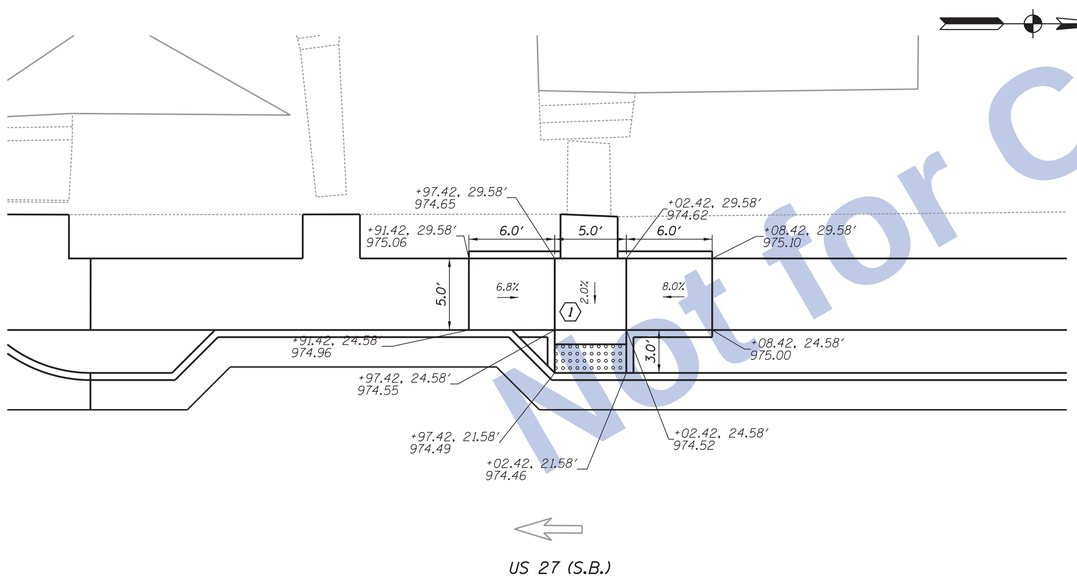

CURB RAMP DETAIL

STA. 1147+00"D" LT

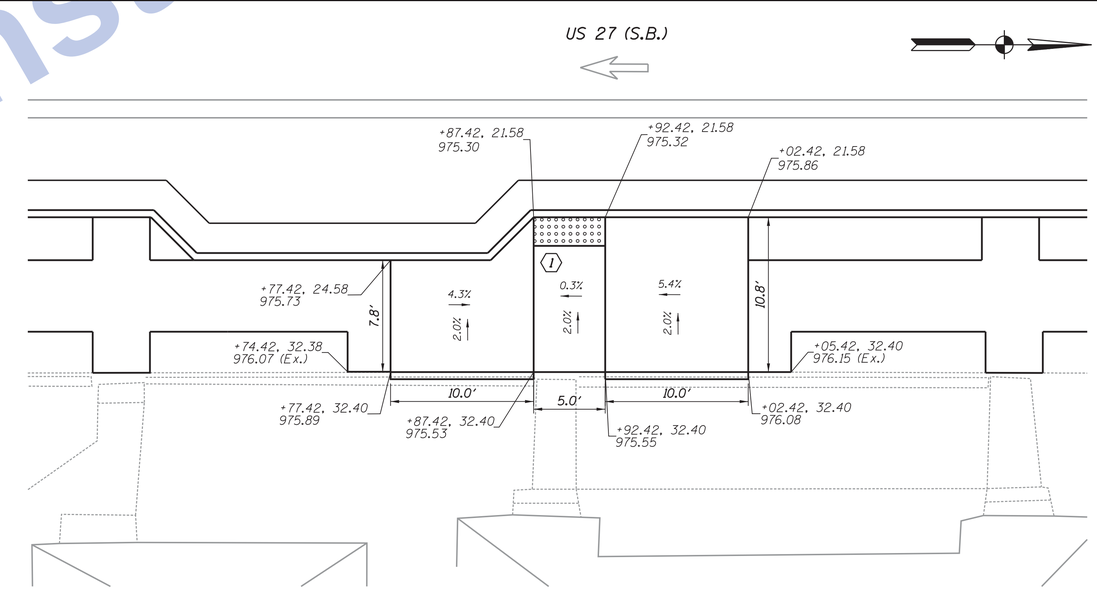

CURB RAMP DETAIL

STA. 1153+91"D" RT

ALL CALLOUTS DESCRIBED FROM LINE "D", UNLESS OTHERWISE SHOWN.

Not for Construction

Clark Dietz ENGINEERS

12:12:33 PM 8/26/2016 P:\0170190\Plans\Misc\INTDET_US27SB_MISC_CR_24.dgn

RECOMMENDED FOR APPROVAL _____ DESIGN ENGINEER DATE	INDIANA DEPARTMENT OF TRANSPORTATION	HORIZONTAL SCALE: 1" = 5′ / BRIDGE FILE
		VERTICAL SCALE: NONE / DESIGNATION: 0100701
DESIGNED: JAL / DRAWN: MP	INTERSECTION, CURB RAMP DETAILS & SPOT ELEVATION	SURVEY BOOK / SHEETS: 151 of 278
CHECKED: RBI / CHECKED: JAL		CONTRACT: R-30397 / PROJECT: 0100701

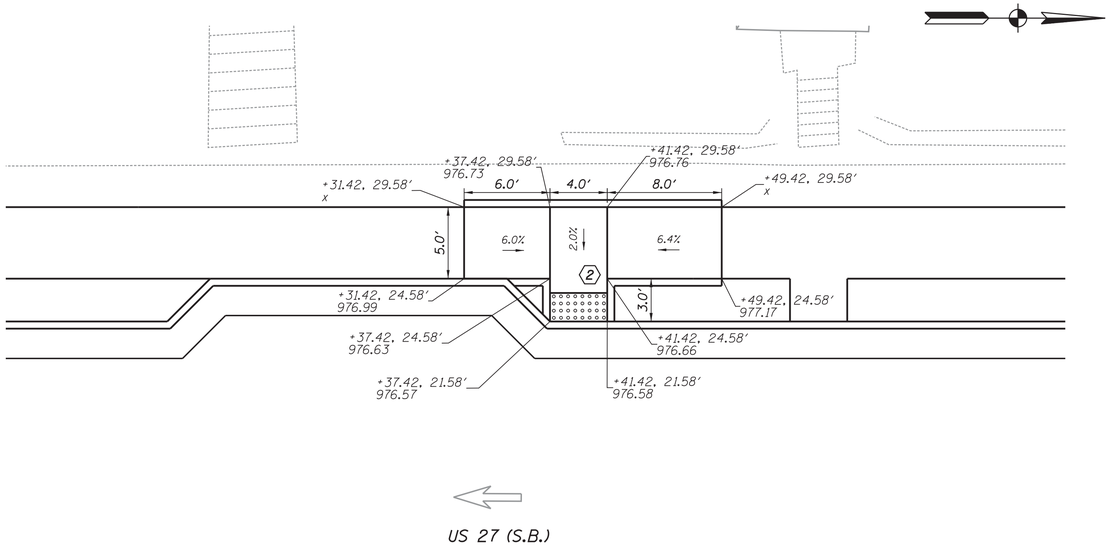

CURB RAMP DETAIL
STA. 1157+40"D" LT

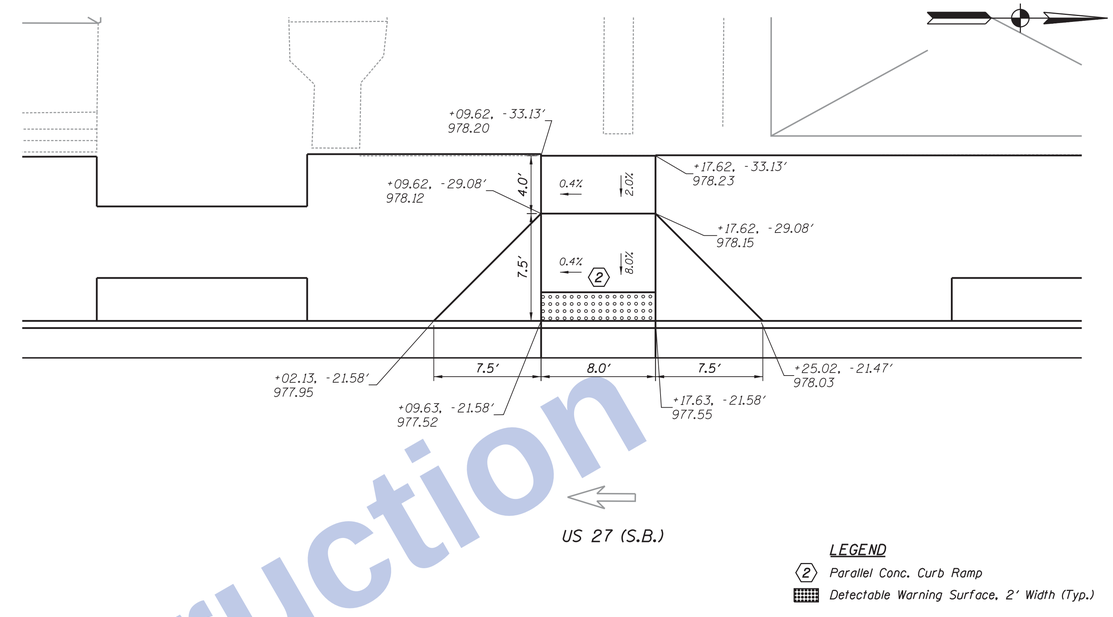

CURB RAMP DETAIL
STA. 1160+14"D" LT

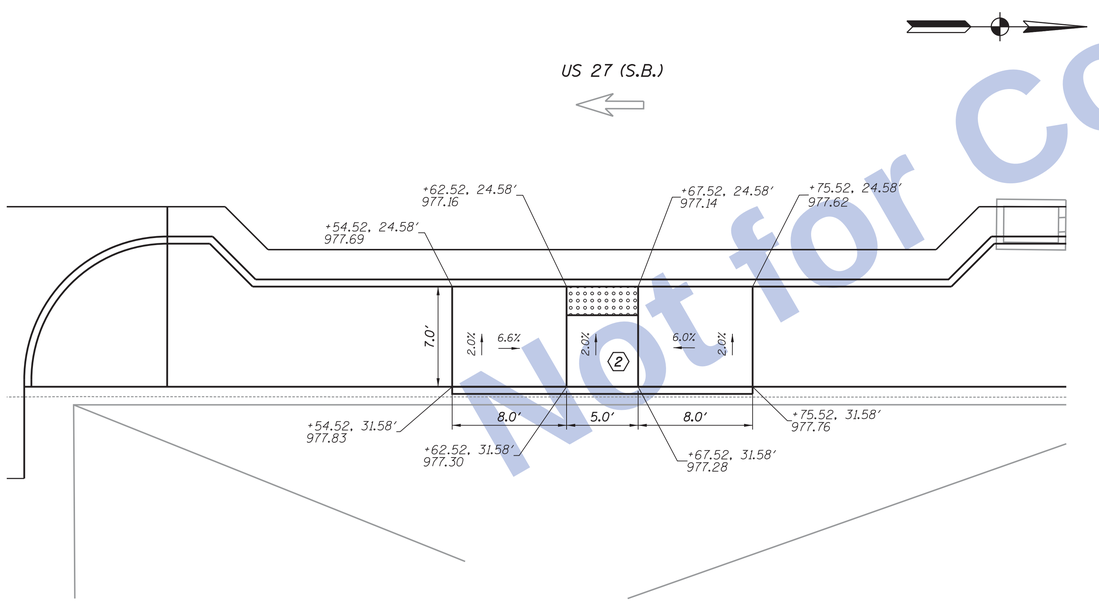

CURB RAMP DETAIL
STA. 1162+65"D" RT

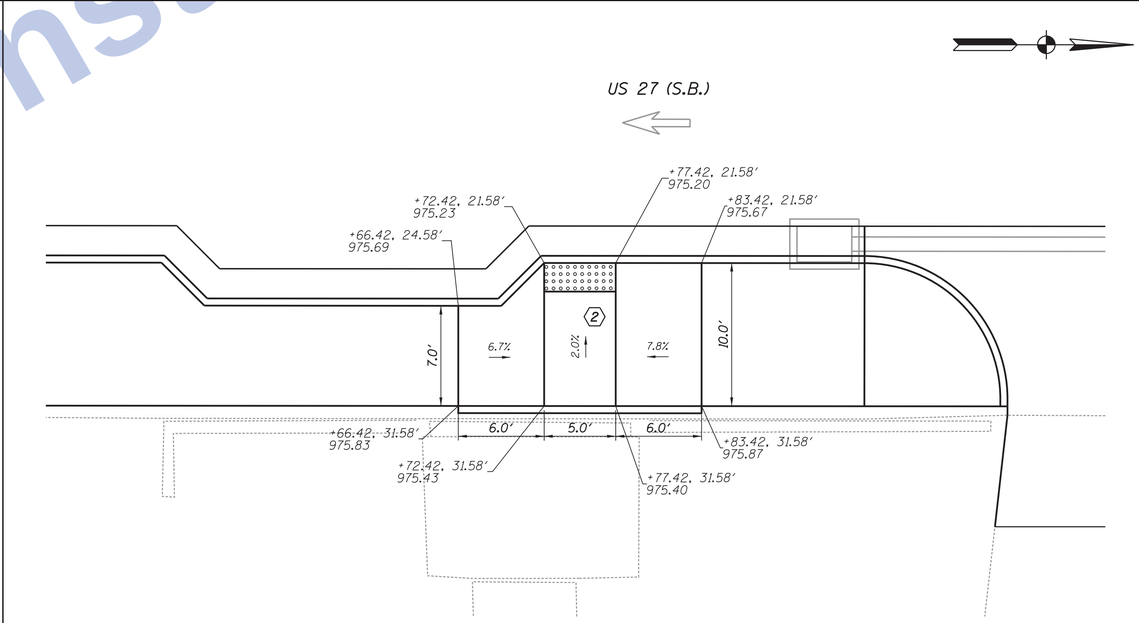

CURB RAMP DETAIL
STA. 1167+75"D" RT

ALL CALLOUTS DESCRIBED FROM LINE "D", UNLESS OTHERWISE SHOWN.

Not for Construction

12:12:35 PM 8/26/2016 P:\10170190\Plans\Misc\INTDET_US27SB_MISC_CR_25.dgn

Clark Dietz
ENGINEERS

RECOMMENDED FOR APPROVAL _____ DESIGN ENGINEER DATE

DESIGNED: JAL | DRAWN: MP
CHECKED: RBI | CHECKED: JAL

INDIANA
DEPARTMENT OF TRANSPORTATION

INTERSECTION, CURB RAMP DETAILS
&
SPOT ELEVATION

HORIZONTAL SCALE	BRIDGE FILE
1" = 5′	
VERTICAL SCALE	DESIGNATION
NONE	0100701
SURVEY BOOK	SHEETS
	152 of 278
CONTRACT	PROJECT
R-30397	0100701

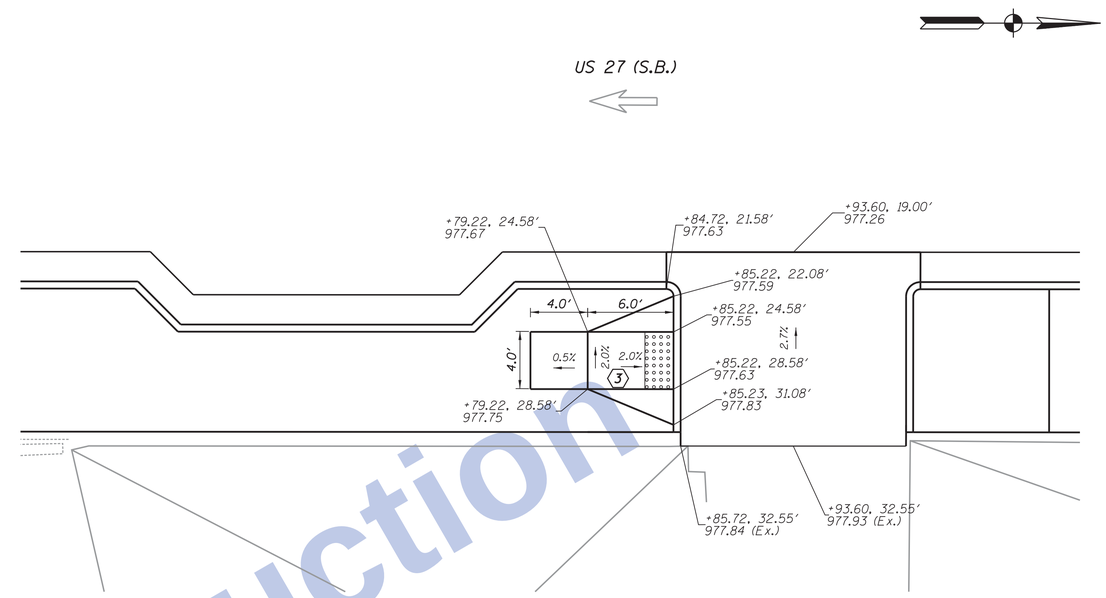

CURB RAMP DETAIL

STA. 1173+40"D" RT

LEGEND

3 One-Way Directional Perpendicular Conc. Curb Ramp

Detectable Warning Surface, 2' Width (Typ.)

ALL CALLOUTS DESCRIBED FROM LINE "D", UNLESS OTHERWISE SHOWN.

Not for Construction

12:12:56 PM 8/26/2016 P:\10170190\Plans\Misc\INTDET_US27SB_MISC_CR_26.dgn

Clark Dietz ENGINEERS

RECOMMENDED FOR APPROVAL _____ DESIGN ENGINEER DATE

DESIGNED: JAL DRAWN: MP

CHECKED: RBI CHECKED: JAL

INDIANA DEPARTMENT OF TRANSPORTATION

INTERSECTION, CURB RAMP DETAILS & SPOT ELEVATION

HORIZONTAL SCALE	BRIDGE FILE
1" = 5'	
VERTICAL SCALE	DESIGNATION
NONE	0100701
SURVEY BOOK	SHEETS
	153 of 278
CONTRACT	PROJECT
R-30397	0100701

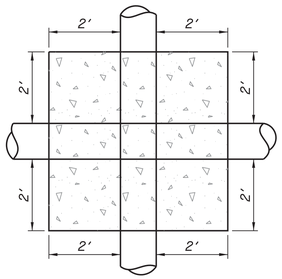

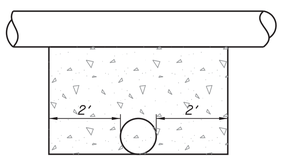

CONCRETE SADDLE BETWEEN STORM & SEWER PIPES

NOTE:
CONCRETE SADDLE IS TO BE USED WHENEVER FROM OUTSIDE BOTTOM OF STORM SEWER PIPE TO OUTSIDE TOP OF SANITARY SEWER PIPE HAS LESS THAN 18 IN. OF SEPARATION. THE COSTS FOR ALL LABOR AND MATERIALS ASSOCIATED WITH THE CONCRETE SADDLES SHALL BE INCLUDED IN THE COSTS OF OTHER 715 ITEMS.

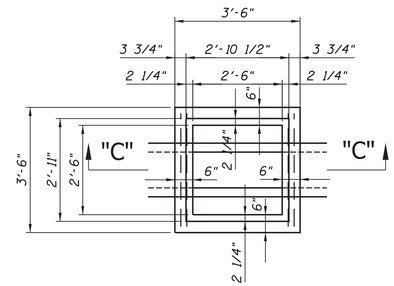

PLAN

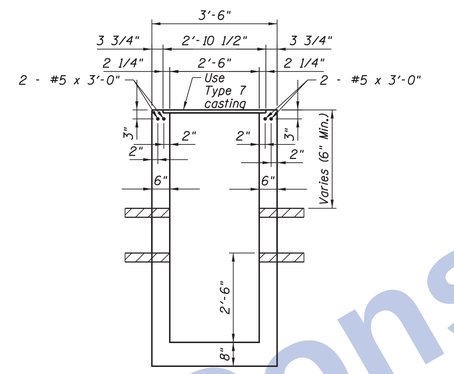

SECTION C-C

CATCH BASIN TYPE "F" DETAIL

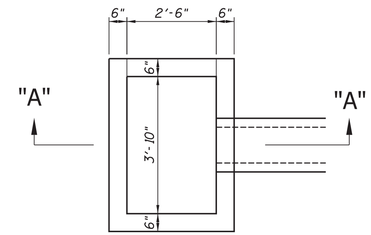

PLAN

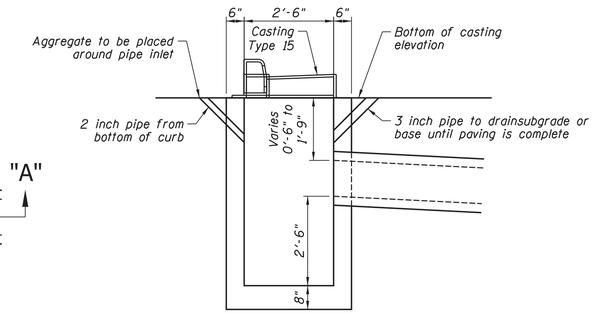

SECTION A-A

CATCH BASIN TYPE "B" DETAIL

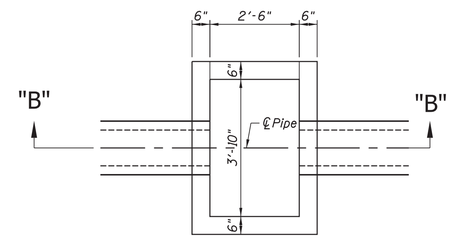

PLAN

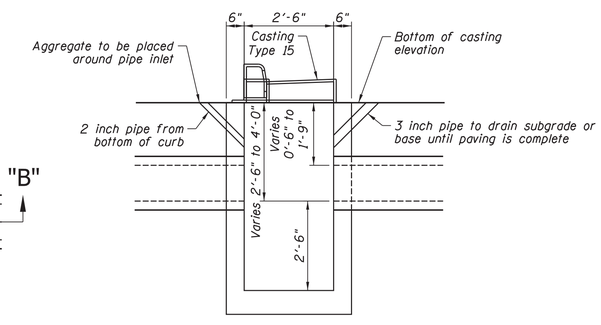

SECTION B-B

CATCH BASIN TYPE "C" DETAIL

Not for Construction

12:12:38 PM 8/26/2016 P:\0170190\Plans\Misc\Misc_Details.dgn

Clark Dietz
ENGINEERS

RECOMMENDED FOR APPROVAL _____ DESIGN ENGINEER DATE

DESIGNED: JAL DRAWN: MP
CHECKED: RBI CHECKED: JAL

INDIANA
DEPARTMENT OF TRANSPORTATION

MISCELLANEOUS DETAILS

HORIZONTAL SCALE	BRIDGE FILE
NONE	
VERTICAL SCALE	DESIGNATION
NONE	0100701
SURVEY BOOK	SHEETS
	154 of 278
CONTRACT	PROJECT
R-30397	0100701

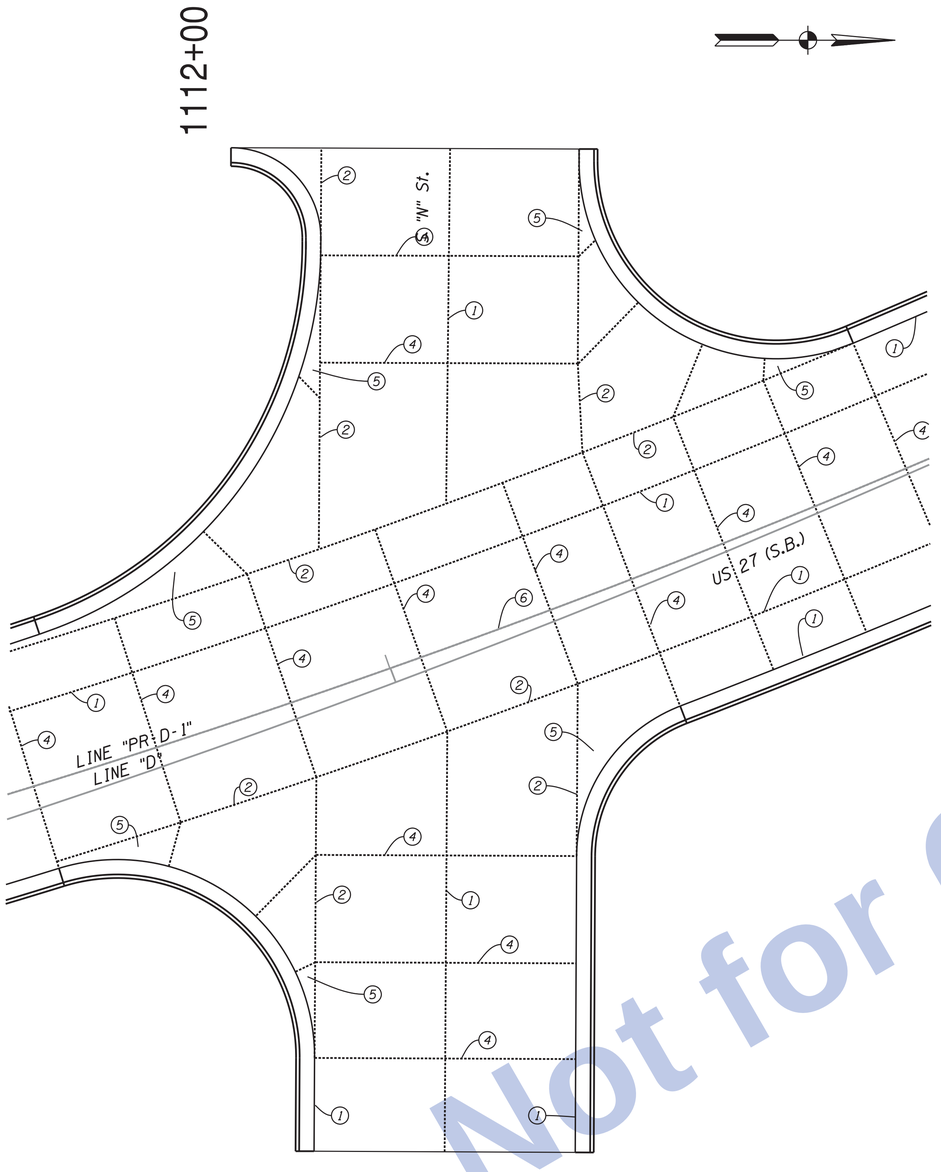

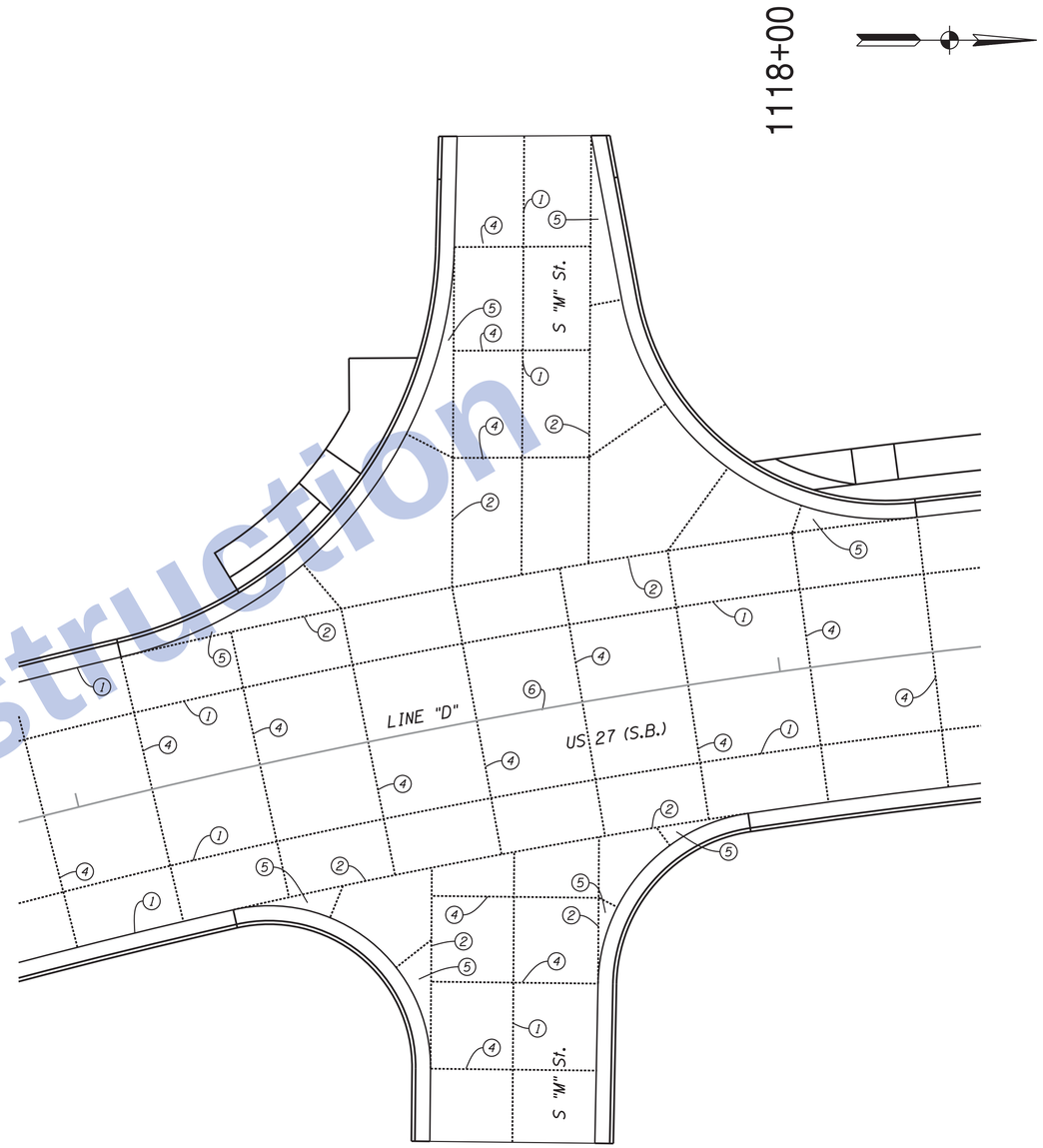

Not for Construction

LEGEND

1 Longitudinal Joint
2 Keyway Joint
4 D-1 Contraction Joint
5 Ear Construction
6 Longitudinal Construction Joint
20 Transverse Construction Joint
21 Retrofitted Tie Bars

Clark Dietz
ENGINEERS

RECOMMENDED FOR APPROVAL _____ DESIGN ENGINEER DATE

DESIGNED: JKH DRAWN: JKH
CHECKED: JAL CHECKED: JAL

INDIANA
DEPARTMENT OF TRANSPORTATION

CONCRETE PAVEMENT JOINT LAYOUT DETAILS

HORIZONTAL SCALE	BRIDGE FILE
1" = 10'	
VERTICAL SCALE	DESIGNATION
NONE	0100701
SURVEY BOOK	SHEETS
	155 of 278
CONTRACT	PROJECT
R-30397	0100701

12:12:40 PM 8/26/2016 P:\0170190\Plans\Details\JOINT_DET_01.dgn

1122+00

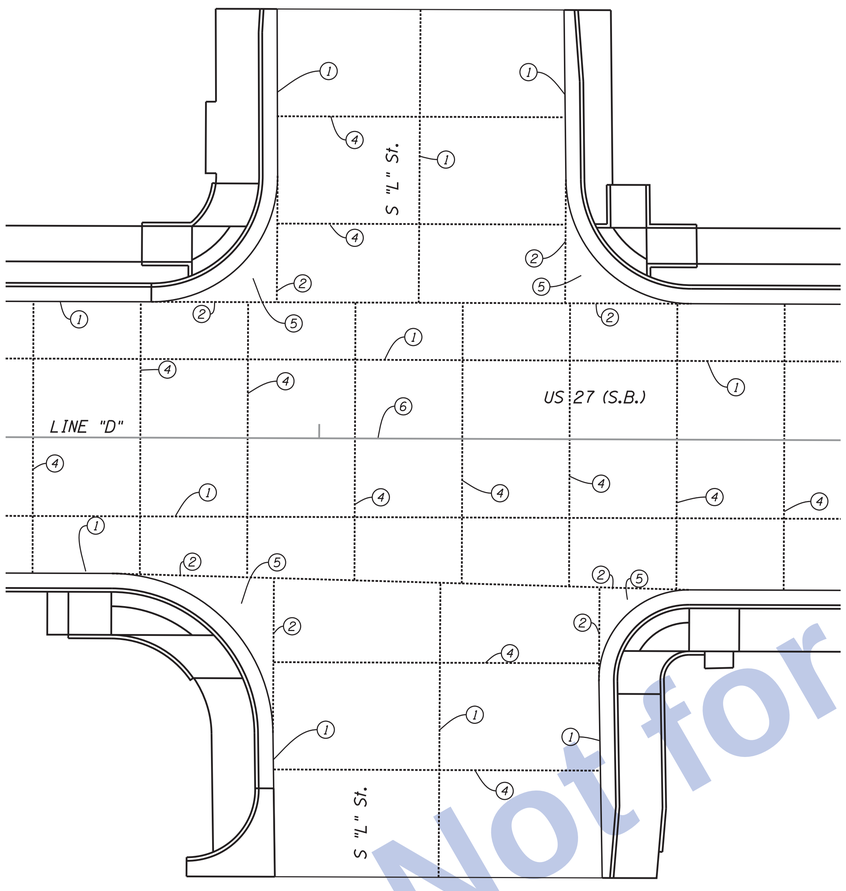

1129+00

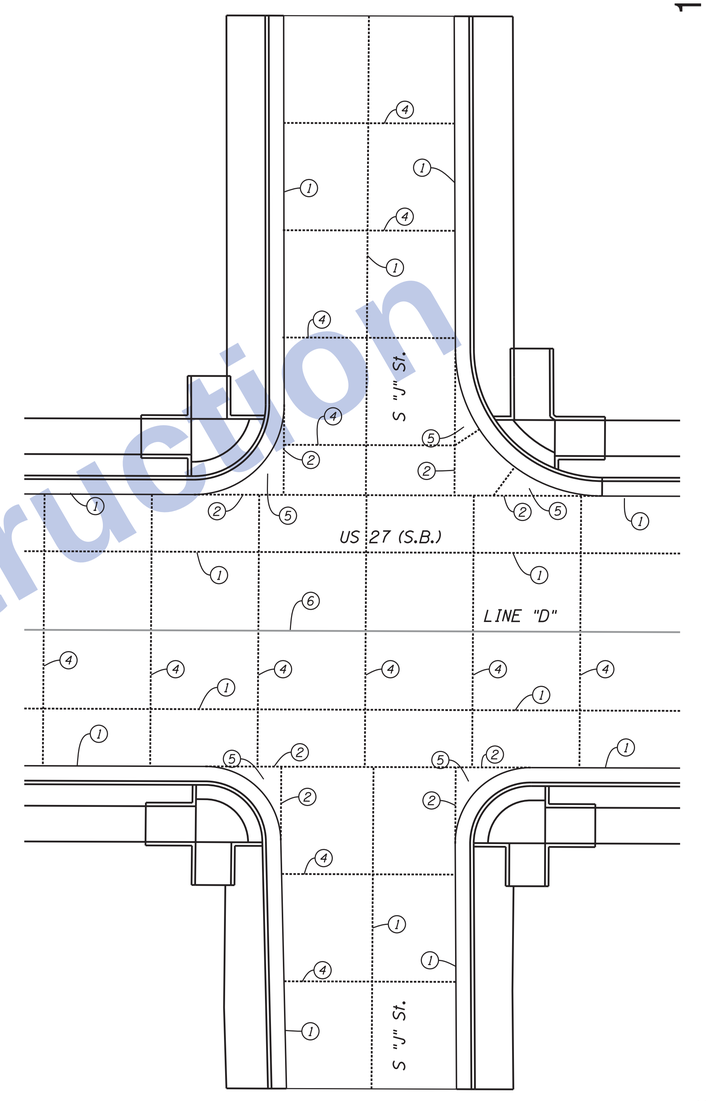

Not for Construction

LEGEND

1. Longitudinal Joint
2. Keyway Joint
4. D-1 Contraction Joint
5. Ear Construction
6. Longitudinal Construction Joint
20. Transverse Construction Joint
21. Retrofitted Tie Bars

Clark Dietz ENGINEERS

RECOMMENDED FOR APPROVAL _____ DESIGN ENGINEER DATE

DESIGNED: JKH DRAWN: JKH

CHECKED: JAL CHECKED: JAL

INDIANA
DEPARTMENT OF TRANSPORTATION

CONCRETE PAVEMENT JOINT LAYOUT DETAILS

HORIZONTAL SCALE	BRIDGE FILE
1" = 10'	
VERTICAL SCALE	DESIGNATION
NONE	0100701
SURVEY BOOK	SHEETS
	156 of 278
CONTRACT	PROJECT
R-30397	0100701

12:12:41 PM 8/26/2016 P:\0170190\Plans\Details\JOINT_DET_02.dgn

1132+00

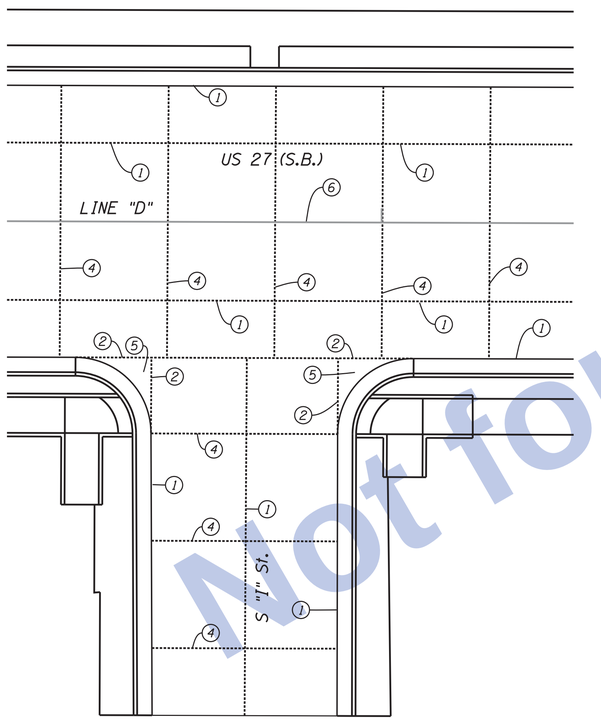

1135+00

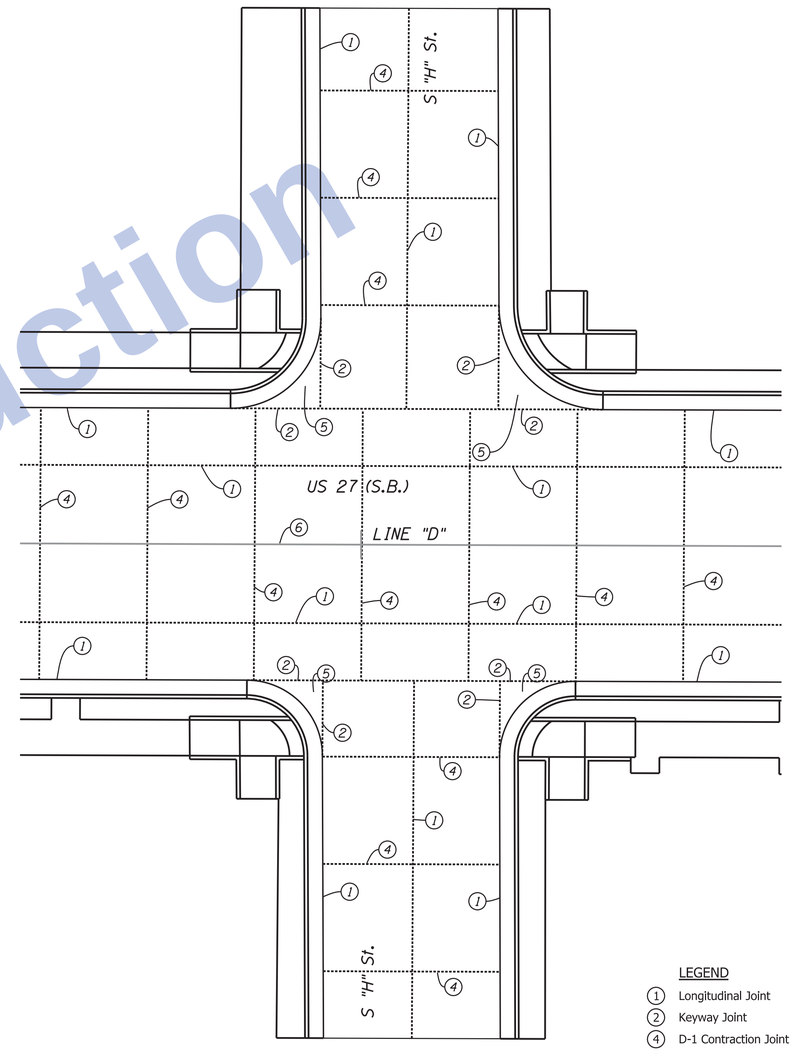

LEGEND

1 Longitudinal Joint
2 Keyway Joint
4 D-1 Contraction Joint
5 Ear Construction
6 Longitudinal Construction Joint
20 Transverse Construction Joint
21 Retrofitted Tie Bars

Not for Construction

Clark Dietz
ENGINEERS

RECOMMENDED FOR APPROVAL _____ DESIGN ENGINEER DATE

DESIGNED: JKH DRAWN: JKH
CHECKED: JAL CHECKED: MP

INDIANA
DEPARTMENT OF TRANSPORTATION

CONCRETE PAVEMENT JOINT LAYOUT DETAILS

HORIZONTAL SCALE	BRIDGE FILE
1" = 10'	
VERTICAL SCALE	DESIGNATION
NONE	0100701
SURVEY BOOK	SHEETS
	157 of 278
CONTRACT	PROJECT
R-30397	0100701

12:12:43 PM 8/26/2016 P:\0170190\Plans\Details\JOINT_DET_03.dgn

1141+00

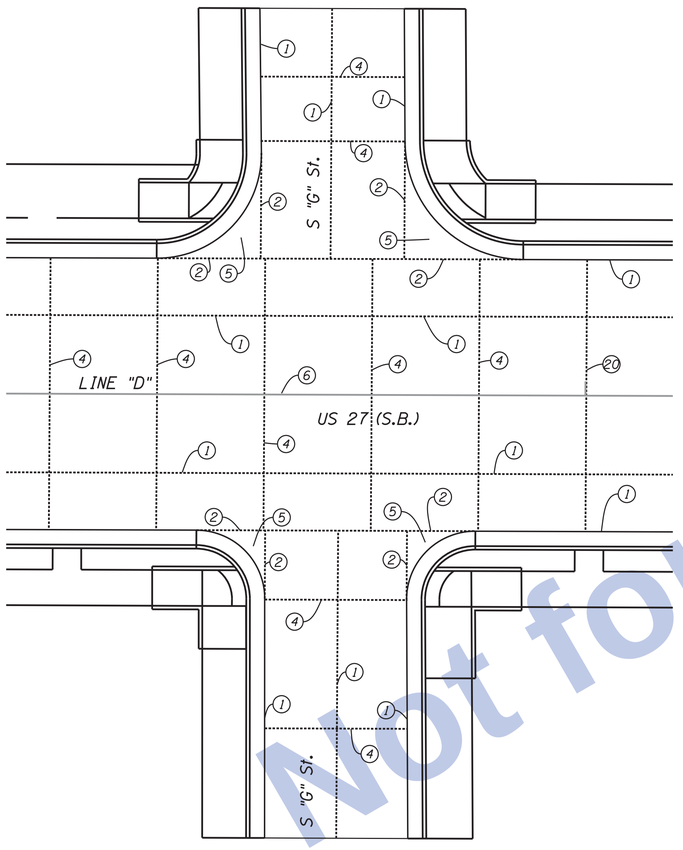

1145+00

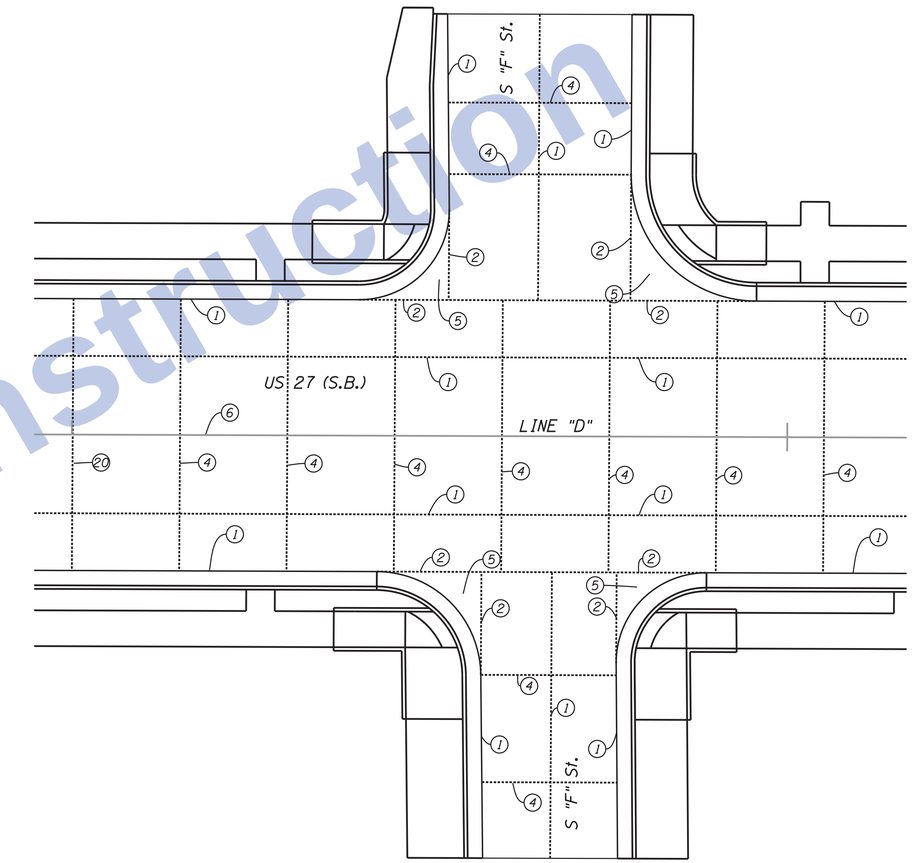

Not for Construction

LEGEND

1. Longitudinal Joint
2. Keyway Joint
4. D-1 Contraction Joint
5. Ear Construction
6. Longitudinal Construction Joint
20. Transverse Construction Joint
21. Retrofitted Tie Bars

Clark Dietz ENGINEERS

RECOMMENDED FOR APPROVAL _____ DESIGN ENGINEER DATE

DESIGNED: JKH DRAWN: JKH
CHECKED: JAL CHECKED: JAL

INDIANA
DEPARTMENT OF TRANSPORTATION

CONCRETE PAVEMENT JOINT LAYOUT DETAILS

HORIZONTAL SCALE	BRIDGE FILE
1" = 10'	
VERTICAL SCALE	DESIGNATION
NONE	0100701
SURVEY BOOK	SHEETS
	158 of 278
CONTRACT	PROJECT
R-30397	0100701

12:12:45 PM 8/26/2016 P:\0170190\Plans\Details\JOINT_DET_04.dgn

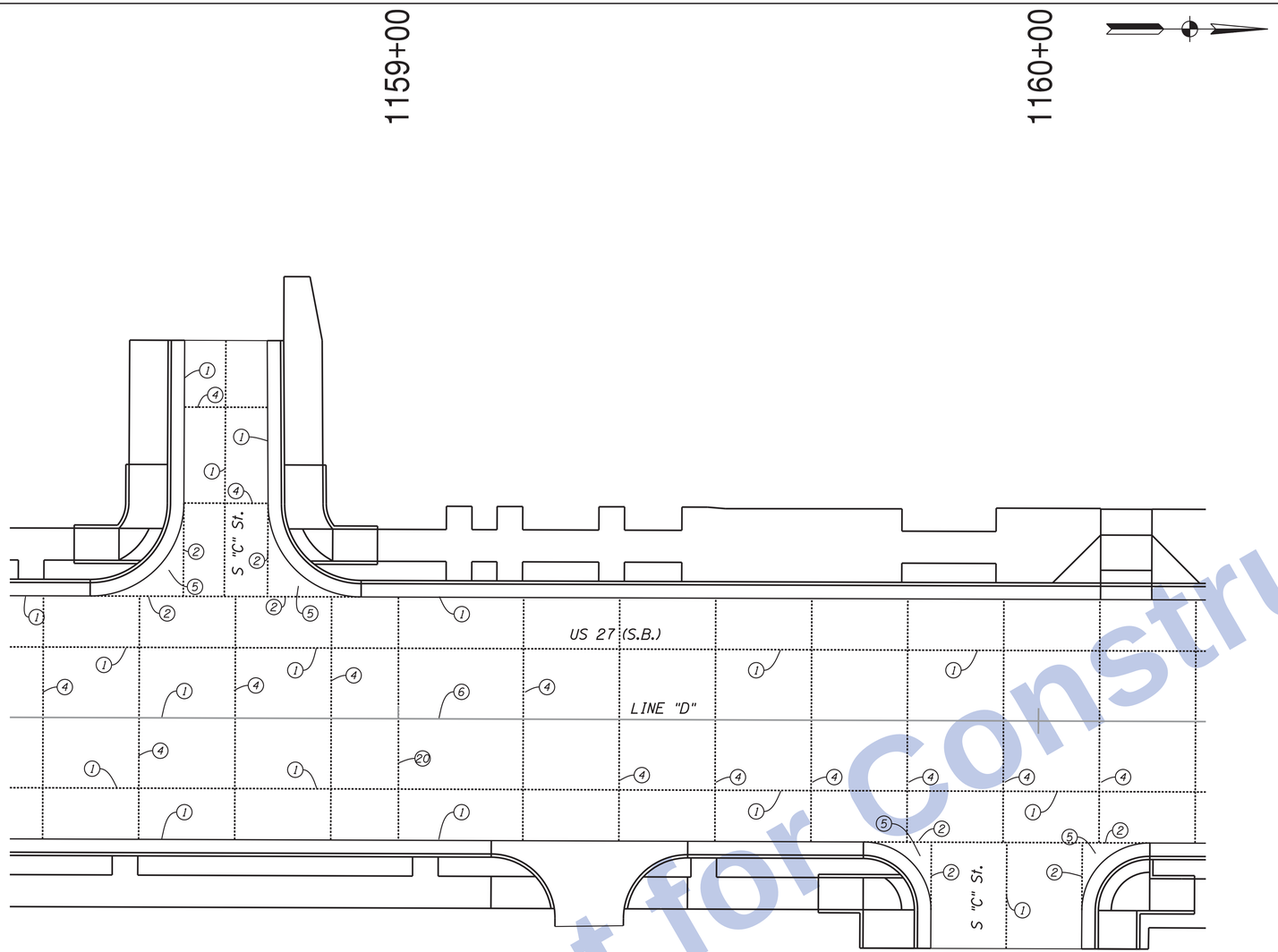

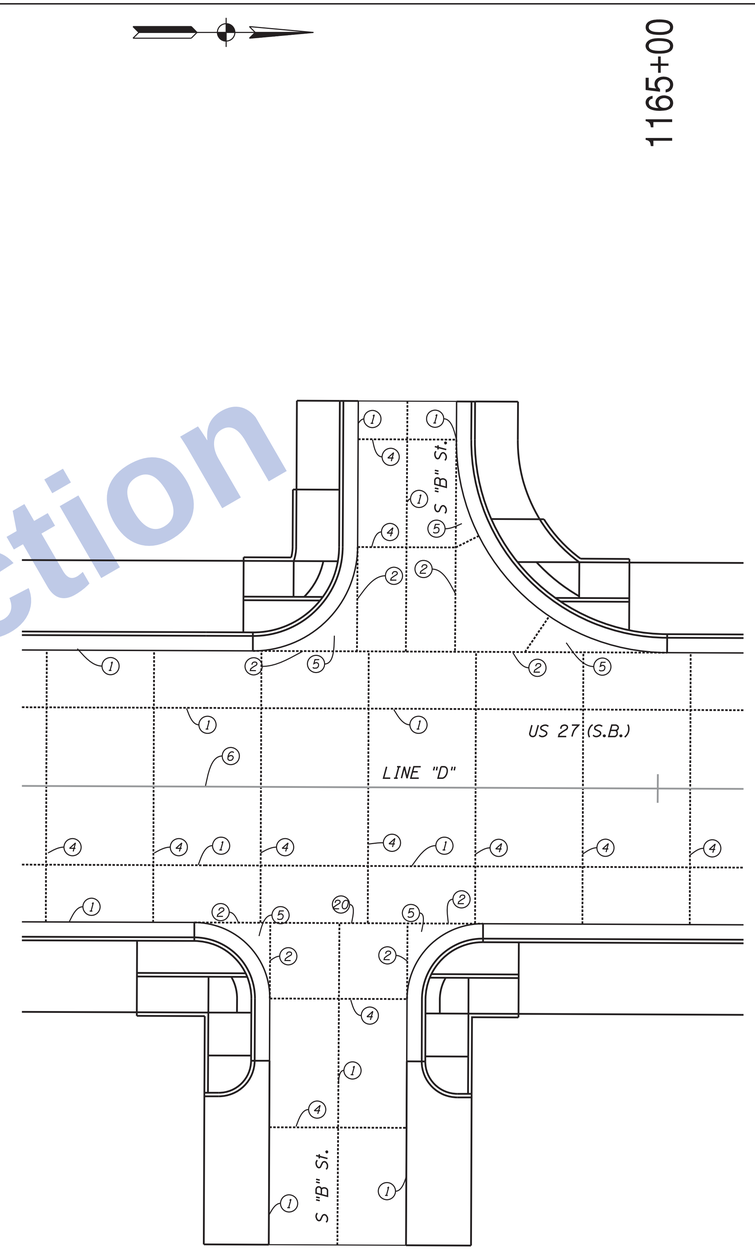

LEGEND

1. Longitudinal Joint
2. Keyway Joint
4. D-1 Contraction Joint
5. Ear Construction
6. Longitudinal Construction Joint
20. Transverse Construction Joint
21. Retrofitted Tie Bars

Not for Construction

12:12:46 PM 8/26/2016 P:\0170190\Plans\Details\JOINT_DET_05.dgn

Clark Dietz ENGINEERS

RECOMMENDED FOR APPROVAL _____ DESIGN ENGINEER DATE

DESIGNED: JKH DRAWN: JKH

CHECKED: JAL CHECKED: JAL

INDIANA
DEPARTMENT OF TRANSPORTATION

CONCRETE PAVEMENT JOINT LAYOUT DETAILS

HORIZONTAL SCALE	BRIDGE FILE
1" = 10'	
VERTICAL SCALE	DESIGNATION
NONE	0100701
SURVEY BOOK	SHEETS
	159 of 278
CONTRACT	PROJECT
R-30397	0100701

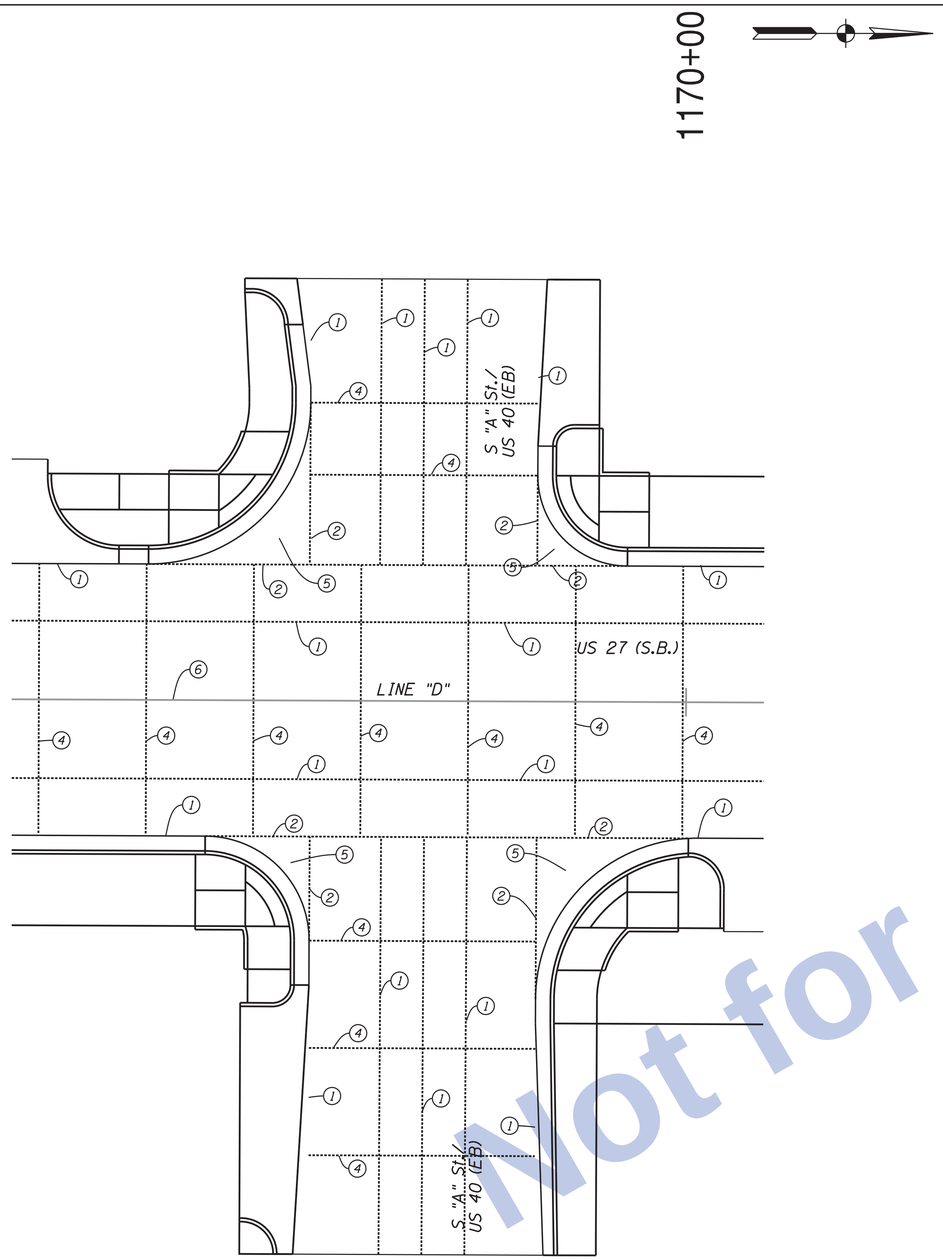

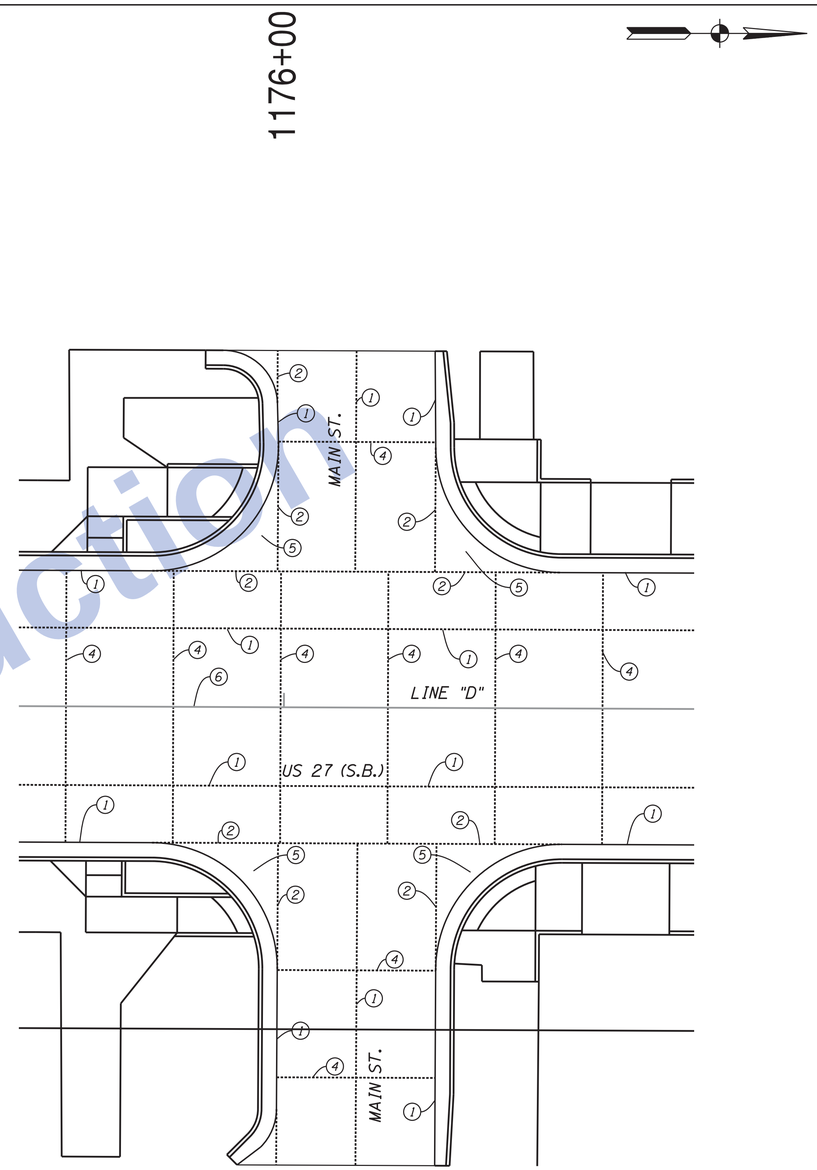

LEGEND

1. Longitudinal Joint
2. Keyway Joint
4. D-1 Contraction Joint
5. Ear Construction
6. Longitudinal Construction Joint
20. Transverse Construction Joint
21. Retrofitted Tie Bars

Not for Construction

12:12:48 PM 8/26/2016 P:\0170190\Plans\Details\JOINT_DET_06.dgn

Clark Dietz
ENGINEERS

RECOMMENDED FOR APPROVAL _____ DESIGN ENGINEER DATE

DESIGNED: JAL DRAWN: MP
CHECKED: RBI CHECKED: JAL

INDIANA
DEPARTMENT OF TRANSPORTATION

CONCRETE PAVEMENT JOINT LAYOUT DETAILS

HORIZONTAL SCALE	BRIDGE FILE
1" = 10'	
VERTICAL SCALE	DESIGNATION
NONE	0100701
SURVEY BOOK	SHEETS
	160 of 278
CONTRACT	PROJECT
R-30397	0100701

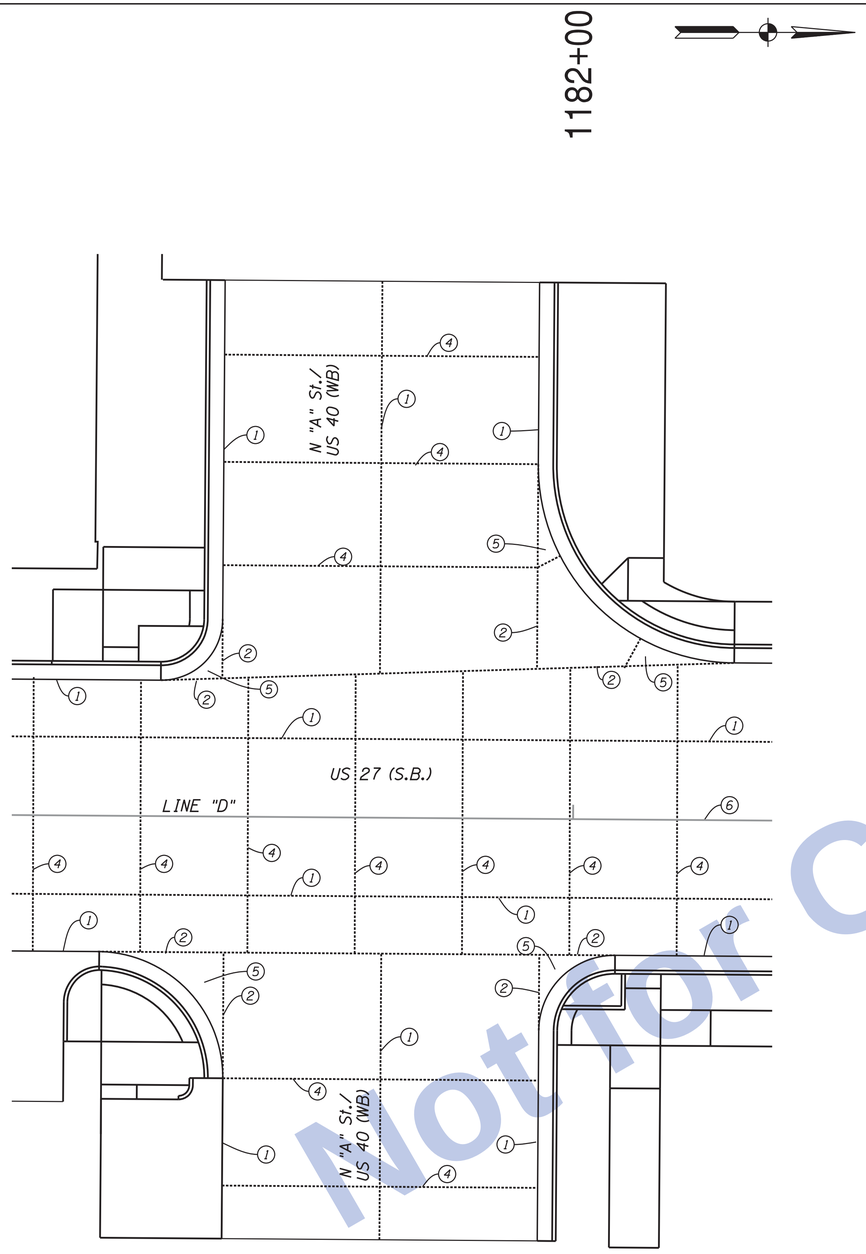

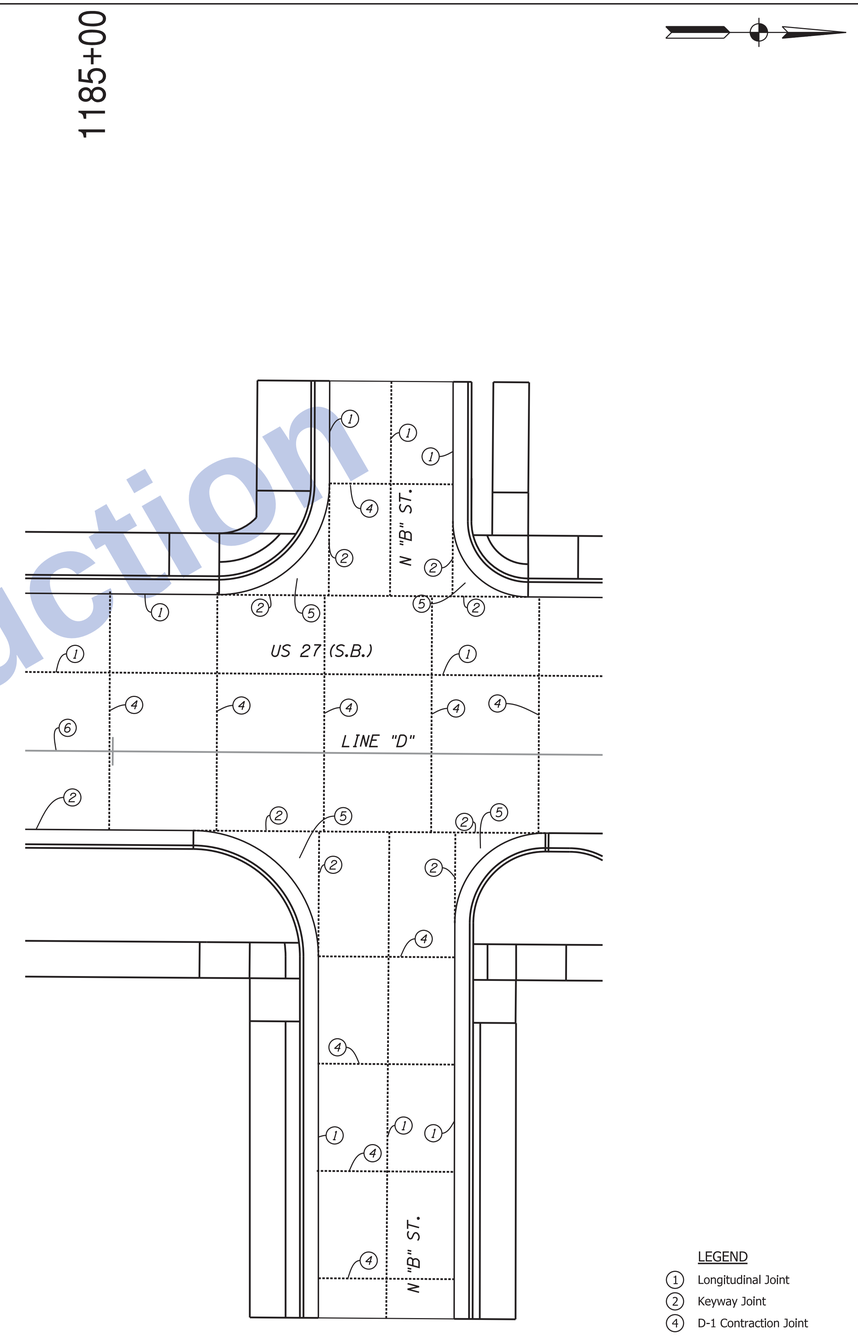

LEGEND

1. Longitudinal Joint
2. Keyway Joint
4. D-1 Contraction Joint
5. Ear Construction
6. Longitudinal Construction Joint
20. Transverse Construction Joint
21. Retrofitted Tie Bars

Not for Construction

Clark Dietz ENGINEERS

RECOMMENDED FOR APPROVAL _____ DESIGN ENGINEER DATE

DESIGNED: JAL DRAWN: MP
CHECKED: RBI CHECKED: JAL

INDIANA
DEPARTMENT OF TRANSPORTATION

CONCRETE PAVEMENT JOINT LAYOUT DETAILS

HORIZONTAL SCALE	BRIDGE FILE
1" = 10'	
VERTICAL SCALE	DESIGNATION
NONE	0100701
SURVEY BOOK	SHEETS
	161 of 278
CONTRACT	PROJECT
R-30397	0100701

12:12:49 PM 8/26/2016 P:\0170190\Plans\Details\JOINT_DET_07.dgn

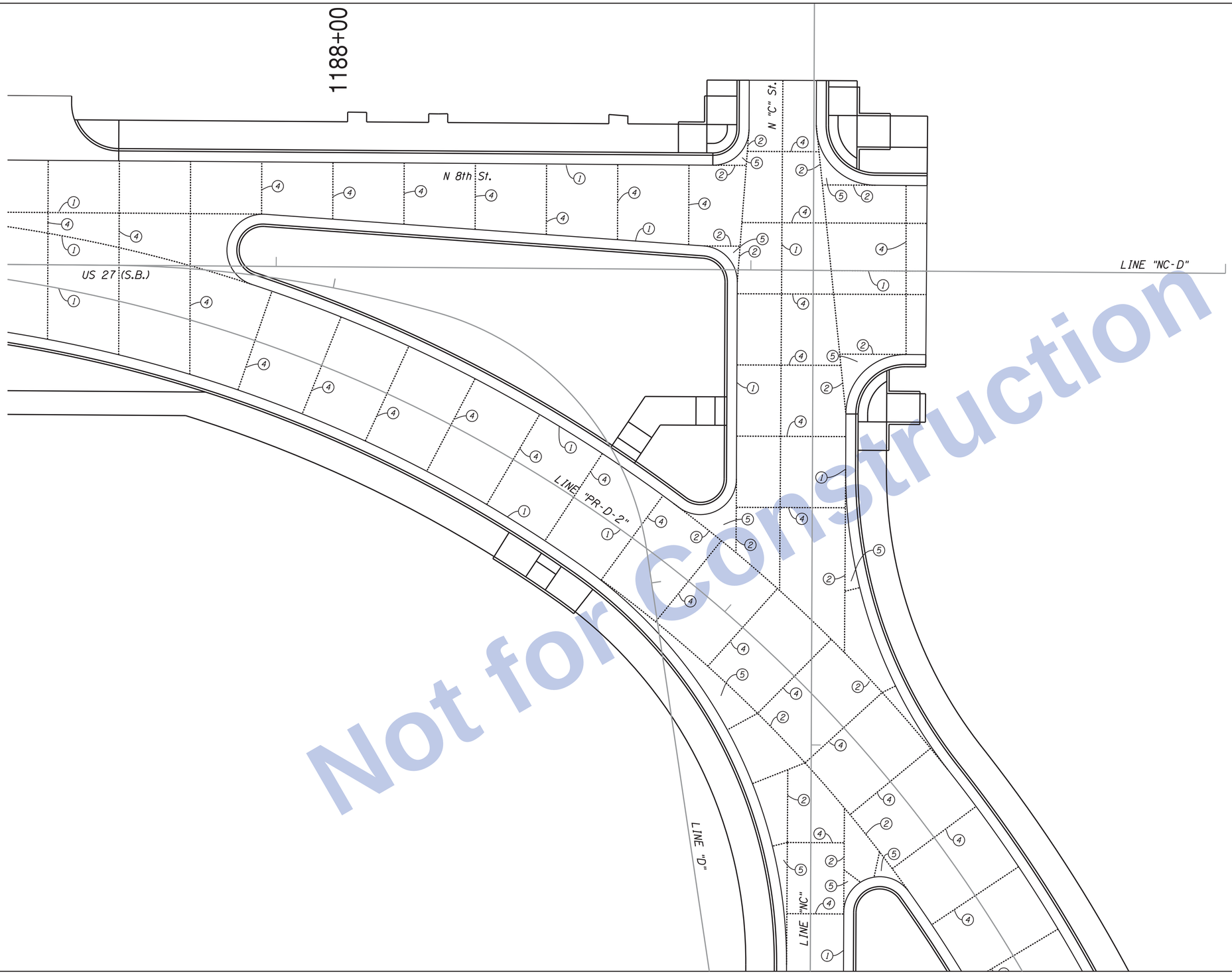

Not for Construction

LEGEND

1. Longitudinal Joint
2. Keyway Joint
4. D-1 Contraction Joint
5. Ear Construction
6. Longitudinal Construction Joint
20. Transverse Construction Joint
21. Retrofitted Tie Bars

Clark Dietz ENGINEERS

RECOMMENDED FOR APPROVAL _____ DESIGN ENGINEER DATE

DESIGNED: JKH DRAWN: JKH

CHECKED: JAL CHECKED: JAL

INDIANA
DEPARTMENT OF TRANSPORTATION

CONCRETE PAVEMENT JOINT LAYOUT DETAILS

HORIZONTAL SCALE	BRIDGE FILE
1" = 10'	
VERTICAL SCALE	DESIGNATION
NONE	0100701
SURVEY BOOK	SHEETS
	162 of 278
CONTRACT	PROJECT
R-30397	0100701

12:12:51 PM 8/26/2016 P:\0170190\Plans\Details\JOINT_DET_08.dgn

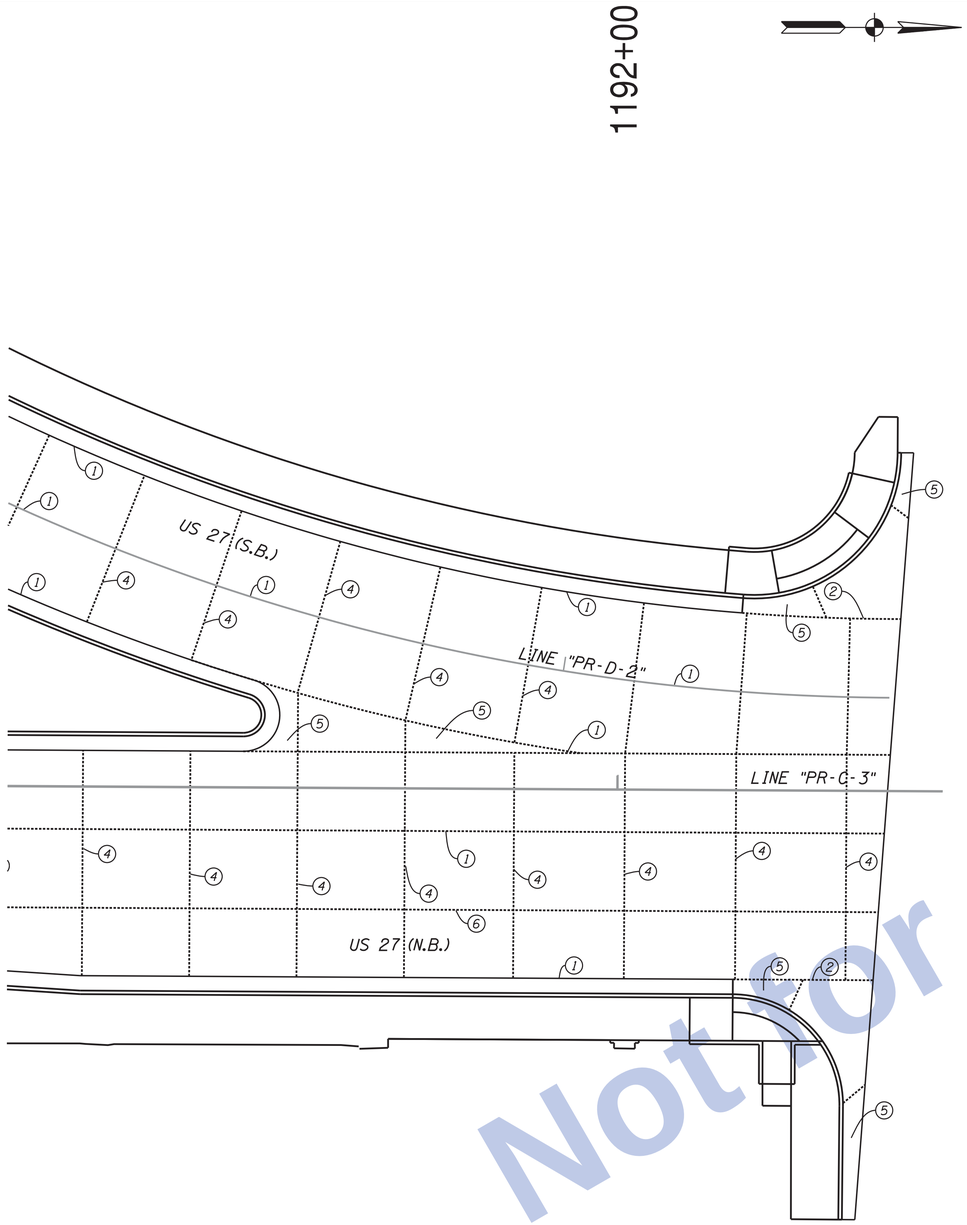

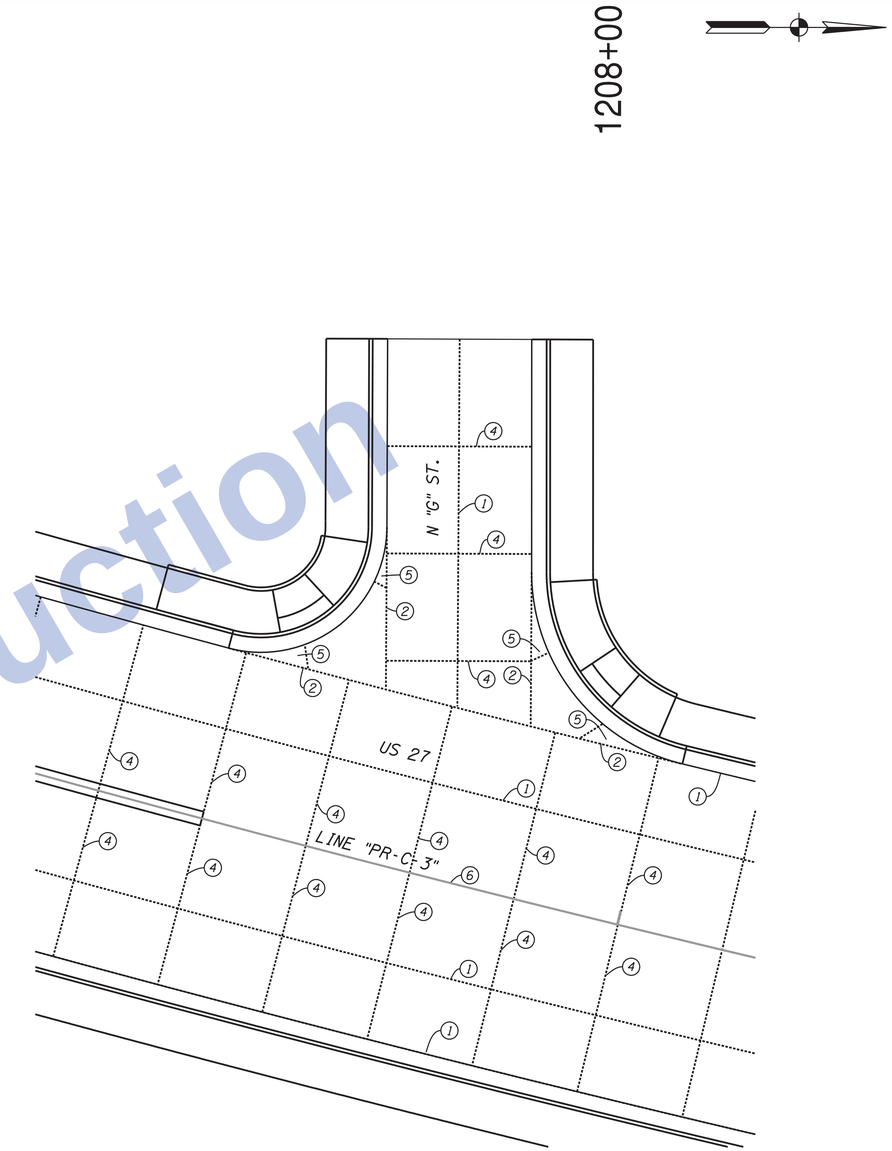

LEGEND

1. Longitudinal Joint
2. Keyway Joint
4. D-1 Contraction Joint
5. Ear Construction
6. Longitudinal Construction Joint
20. Transverse Construction Joint
21. Retrofitted Tie Bars

Not For Construction

Clark Dietz
ENGINEERS

RECOMMENDED FOR APPROVAL _____ DESIGN ENGINEER DATE

DESIGNED: JAL DRAWN: MP
CHECKED: RBI CHECKED: JAL

INDIANA
DEPARTMENT OF TRANSPORTATION

CONCRETE PAVEMENT JOINT LAYOUT DETAILS

HORIZONTAL SCALE	BRIDGE FILE
1" = 10'	
VERTICAL SCALE	DESIGNATION
NONE	0100701
SURVEY BOOK	SHEETS
	163 of 278
CONTRACT	PROJECT
R-30397	0100701

12:12:53 PM 8/26/2016 P:\10170190\Plans\Details\JOINT_DET_09.dgn

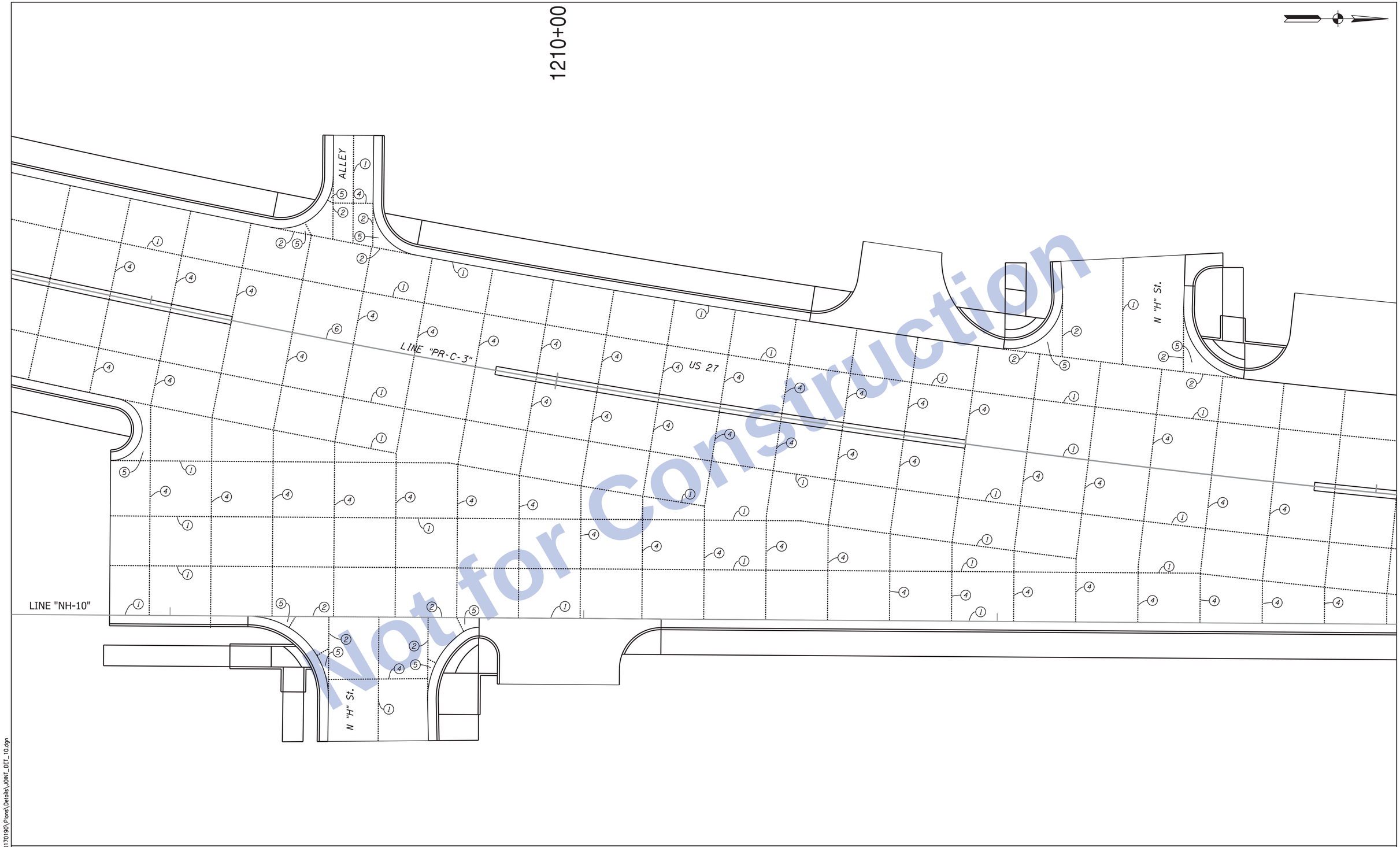

Not for Construction

Clark Dietz
ENGINEERS

RECOMMENDED FOR APPROVAL _____ DESIGN ENGINEER DATE

DESIGNED: JKH DRAWN: JKH
CHECKED: JAL CHECKED: JAL

INDIANA
DEPARTMENT OF TRANSPORTATION

CONCRETE PAVEMENT JOINT LAYOUT DETAILS

HORIZONTAL SCALE	BRIDGE FILE
1" = 10'	
VERTICAL SCALE	DESIGNATION
NONE	0100701
SURVEY BOOK	SHEETS
	164 of 278
CONTRACT	PROJECT
R-30397	0100701

12:12:54 PM 8/26/2016 P:\0170190\Plans\Details\JOINT_DET_10.dgn

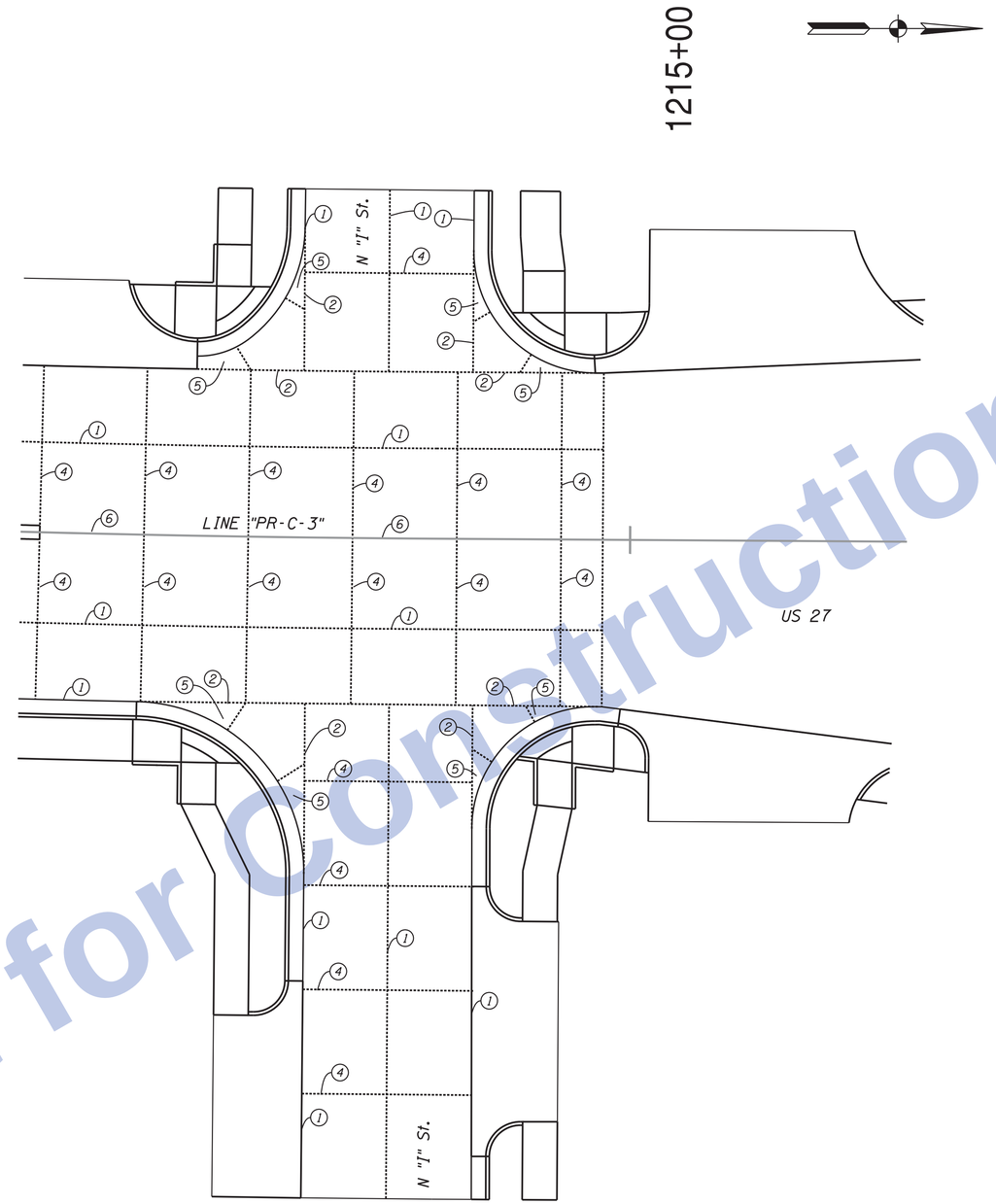

Not for Construction

LEGEND

1. Longitudinal Joint
2. Keyway Joint
4. D-1 Contraction Joint
5. Ear Construction
6. Longitudinal Construction Joint
20. Transverse Construction Joint
21. Retrofitted Tie Bars

Clark Dietz ENGINEERS

RECOMMENDED FOR APPROVAL _____ DESIGN ENGINEER DATE

DESIGNED: JKH DRAWN: JKH

CHECKED: JAL CHECKED: JAL

INDIANA
DEPARTMENT OF TRANSPORTATION

CONCRETE PAVEMENT JOINT LAYOUT DETAILS

HORIZONTAL SCALE	BRIDGE FILE
1" = 10'	
VERTICAL SCALE	DESIGNATION
NONE	0100701
SURVEY BOOK	SHEETS
	165 of 278
CONTRACT	PROJECT
R-30397	0100701

12:12:56 PM 8/26/2016 P:\0170190\Plans\Details\JOINT_DET_11.dgn

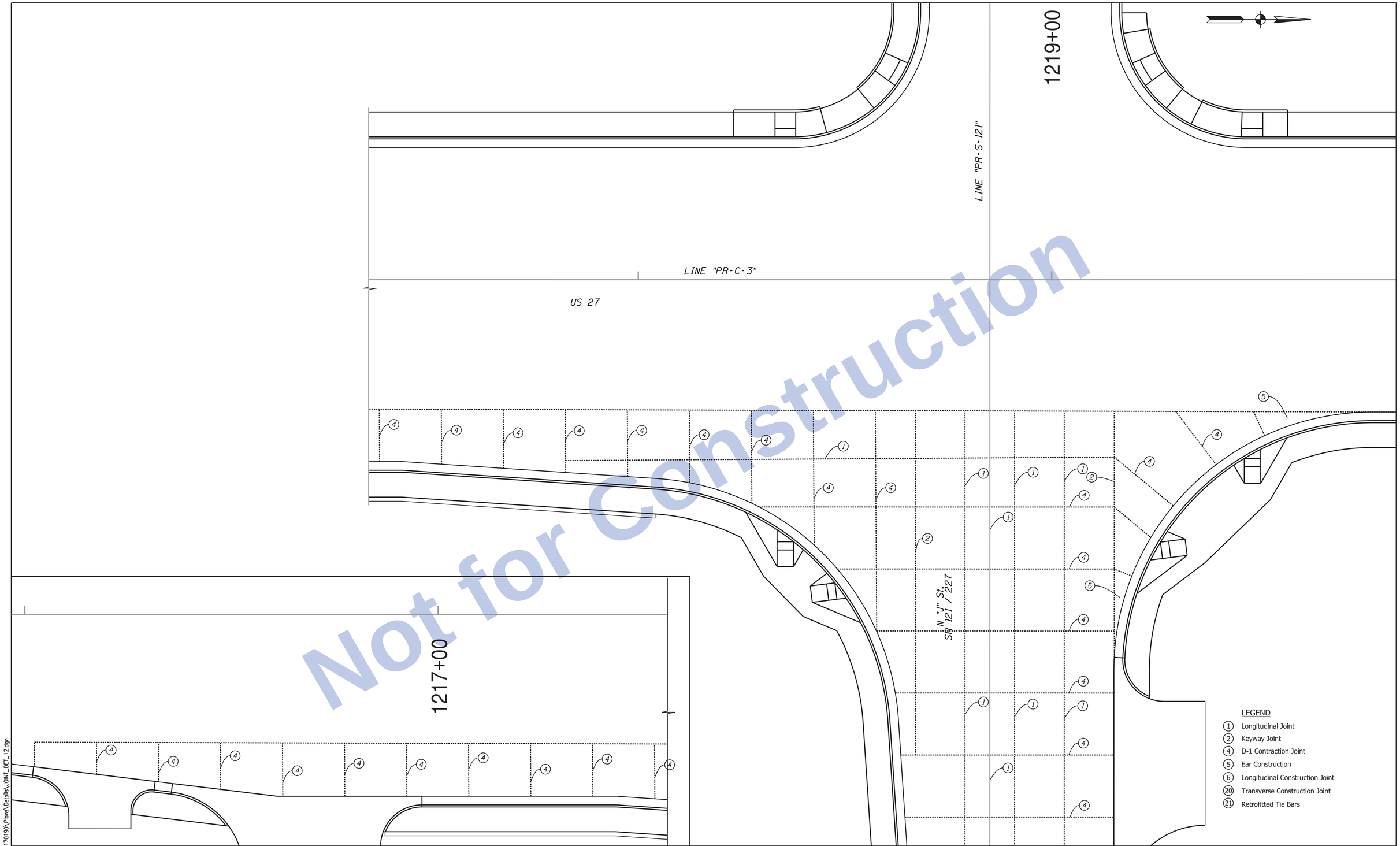

Not for Construction

12:12:57 PM 8/26/2016 P:\0170190\Plans\Details\JOINT_DET_12.dgn

Clark Dietz
ENGINEERS

RECOMMENDED FOR APPROVAL _____ DESIGN ENGINEER DATE

DESIGNED: JAL DRAWN: MP
CHECKED: RBI CHECKED: JAL

INDIANA
DEPARTMENT OF TRANSPORTATION

CONCRETE PAVEMENT JOINT LAYOUT DETAILS

HORIZONTAL SCALE	BRIDGE FILE
1" = 10'	
VERTICAL SCALE	DESIGNATION
NONE	0100701
SURVEY BOOK	SHEETS
	166 of 278
CONTRACT	PROJECT
R-30397	0100701

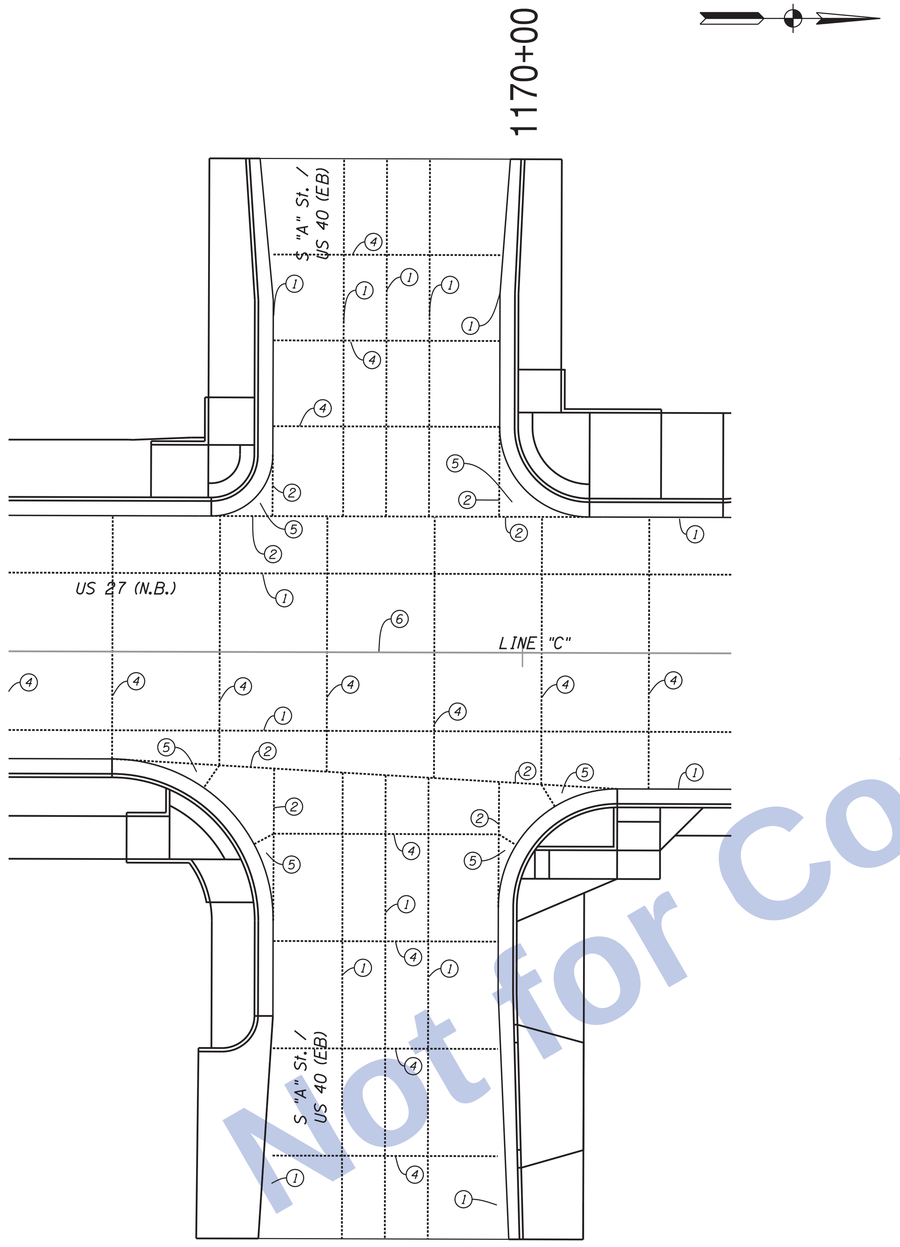

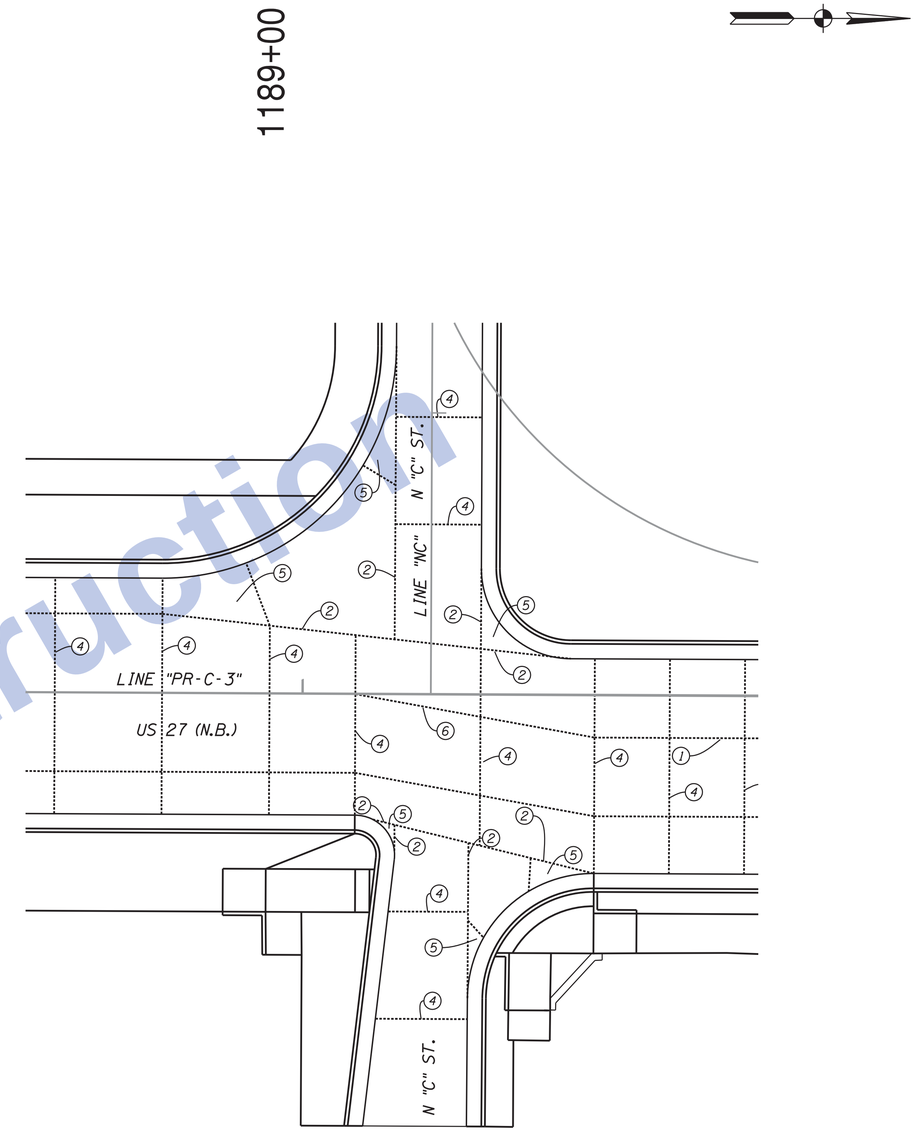

LEGEND

1. Longitudinal Joint
2. Keyway Joint
4. D-1 Contraction Joint
5. Ear Construction
6. Longitudinal Construction Joint
20. Transverse Construction Joint
21. Retrofitted Tie Bars

Not for Construction

Clark Dietz ENGINEERS

RECOMMENDED FOR APPROVAL _____ DESIGN ENGINEER DATE

DESIGNED: JKH DRAWN: JKH

CHECKED: JAL CHECKED: MP

INDIANA
DEPARTMENT OF TRANSPORTATION

CONCRETE PAVEMENT JOINT DETAILS

HORIZONTAL SCALE	BRIDGE FILE
1" = 20'	
VERTICAL SCALE	DESIGNATION
NONE	0100701
SURVEY BOOK	SHEETS
	167 of 278
CONTRACT	PROJECT
R-30397	0100701

12:12:59 PM 8/26/2016 P:\0170190\Plans\Details\JOINT_DET_13.dgn