CONTRACT NO. R-20970

BRIDGES OVER 20' SPAN					
FEDERAL ROAD REGION NO.	STATE	PROJECT NO.	FISCAL YEAR	SHEET NO.	TOTAL SHEETS
5	IND.	ACIM-70-2(072)		1	37

INDIANA DEPARTMENT OF TRANSPORTATION

BRIDGE PLANS
FOR SPANS OVER 20 FEET
ON
I-70 OVER MILL CREEK

PROJECT ACIM-70-2 (---)P.E. (---)R/W (072)CONST

BRIDGE DECK WIDENING AND REPLACEMENT AND APPROACH SLAB RECONSTRUCTION
STRUCTURE NO. I-70-51-5178C OVER MILL CREEK IN SECTION 17,
T-13-N, R-2-W, IN JEFFERSON TOWNSHIP, PUTNAM COUNTY, INDIANA, AT
R.P. 49+36.

INDEX

PROJECT	STRUCTURE	TYPE	SPAN	OVER	STATION
ACIM-70-2(072)	I-70-51-5178C	BRIDGE REHABILITATION	1@38'-5 1/8; 1@57'-3 5/8 1@79'-0; 1@57'-3 5/8 1@38'-5 1/8	MILL CREEK	982+00 "A"

SHEET NO.	SHEET DESIGNATION	SUBJECT	F.H.W.A. APPROVAL
1	ONE SHEET	TITLE SHEET	—
2	R1	GENERAL PLAN-EXISTING STRUCTURE	
3	R2	GENERAL PLAN-PROPOSED STRUCTURE	
4	R3	BENT NO. 1 W.B. & NO. 6 E.B.	
5	R4	BENT NO. 1 E.B. & NO. 6 W.B.	
6	R5	BENT NO. 1 & NO. 6 DETAILS	
7	R6	PIER NO. 2 W.B. & NO. 5 E.B.	
8	R7	PIER NO. 2 E.B. & NO. 5 W.B.	
9	R8	PIER NO. 3 & NO. 4 W.B.	
10	R9	PIER NO. 3 & NO. 4 E.B.	
11	R10	PIER FOOTING DETAILS	
12	R11	SUPERSTRUCTURE-SPAN A & E	
13	R12	SUPERSTRUCTURE-SPAN B,C & D	
14 & 15	R13 & R14	SUPERSTRUCTURE DETAILS	
16	R15	BEAM DETAILS-SPAN A & E	
17	R16	BEAM DETAILS-SPAN B,C & D	
18 & 19	R17 & R18	W.B. SCREED DATA	
20 & 21	R19 & R20	E.B. SCREED DATA	
22	R21	R.C. BRIDGE APPROACH SLAB DETAILS	
23	ONE SHEET	BRIDGE SUMMARY	

INDEX CONTINUED
SHEET DRAWINGS

SHEET NO.	SHEET DESIGNATION	SUBJECT	F.H.W.A. APPROVAL	ADOPTED "A" REVISION "R"
24	BRIDGE STD. BR-1	CONCRETE BRIDGE RAILING TRANSITION TYPE TGB	3-9-93	A AUG 1992
25	BRIDGE STD. BR-1A	CONCRETE BRIDGE RAILING TRANSITION TYPE TGB	3-9-93	A AUG 1992
26	BRIDGE STD. C-1	MISCELLANEOUS BRIDGE STANDARDS	1-26-93	A DEC 1992
27	BRIDGE STD. C-3	MISCELLANEOUS BRIDGE STANDARDS	1-26-93	A NOV 1992
28	BRIDGE STD. C-5	PRECAST DECK PANEL DETAILS	7-13-88	A JUN 1988
29	BRIDGE STD. D	CASTING DETAILS ROADWAY DRAINS	1-11-89	R 9-1-88
30	BRIDGE STD. PB-1	PRESTRESSED CONCRETE TYPE I I-BEAMS	4-16-62	A JAN 1962
31	BRIDGE STD. PB-3	PRESTRESSED CONCRETE TYPE III I-BEAMS	4-16-62	A JAN 1962
32	BRIDGE STD. PB-10	TOLERANCES FOR FABRICATION OF PRESTRESSED BEAMS	8-14-63	A NOV 1962
33	BRIDGE STD. PB-11	ELASTOMERIC BEARING PAD DETAILS: CONCRETE BEAMS	2-3-87	R 2-2-87
34	BRIDGE STD. S-1	MISCELLANEOUS DETAILS	1-22-87	R 12-1-86
35	ROAD STD. SHEET A JOINTS	STANDARD PAVEMENT JOINTS	*	R 3-1-90
36	ROAD STD. SHEET B JOINTS	STANDARD PAVEMENT JOINTS	1-26-93	A NOV 1992
37	ROAD STD. MT19 TRAFFIC	MISCELLANEOUS TRAFFIC STANDARDS	1-6-88	A NOV 1987

* F.H.W.A. Approved Pending

NOTE: WHENEVER IM-70-2(072) APPEARS ON THESE PLANS OR CONTRACT DOCUMENTS IT SHALL BE INTERPRETED AS ACIM-70-2(072)

BRIDGE LENGTH: MI.
ROADWAY LENGTH: MI.
TOTAL LENGTH: MI.
MAX. GRADE: %

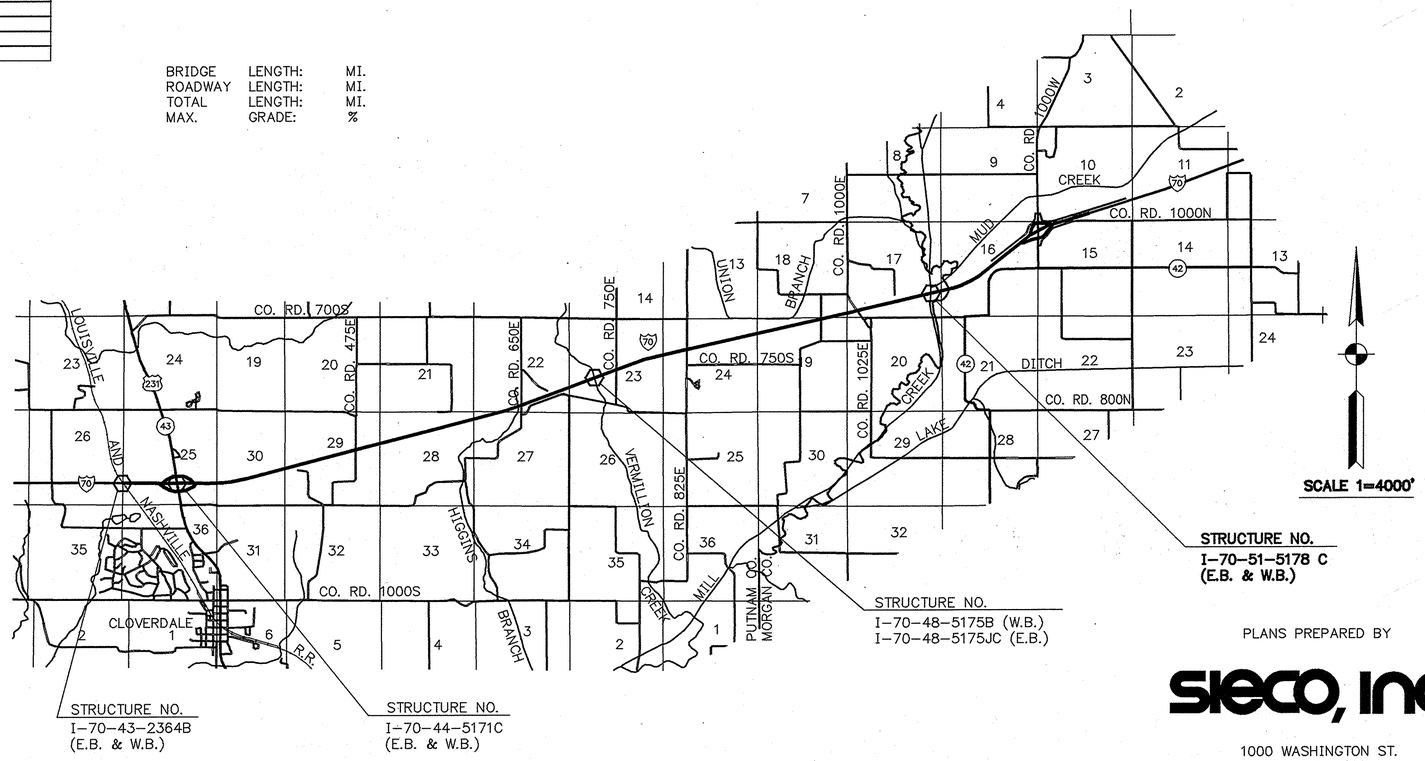

TRAFFIC DATA		
A.D.T. (1993)		35,000 V.P.D.
A.D.T. (2013 PROJECTED)		56,600 V.P.D.
D.H.V. (2013 PROJECTED)		3,962 V.P.H.
TRUCKS		D.H.V.28% A.D.T.32%
DESIGN SPEED		70 M.P.H.
ACCESS CONTROL		FULL
TERRAIN		ROLLING
FUNCTIONAL CLASSIFICATION		INTERSTATE

PLANS PREPARED BY

sieco, inc.

1000 WASHINGTON ST.
P.O. BOX 420
MICHIGAN CITY, IN 46360

THOMAS S. SHARP REGISTERED 19806 STATE OF INDIANA PROFESSIONAL ENGINEER

CERTIFIED BY: Thomas S. Sharp 10/21/93
PHONE (219) 874-6238 DATE

APPROVED FOR LETTING: Phillip H. Koch 11/4/93
CHIEF, DIVISION OF DESIGN DATE

REVISION	
DATE	SHEET NO.
—	—

REVISION	
DATE	SHEET NO.
—	—

INDIANA DEPARTMENT OF TRANSPORTATION
STANDARD SPECIFICATIONS DATED 1993
TO BE USED WITH THESE PLANS.

DES. NO. 9139466

BRIDGE FILE: I-70-51-5178C

R 20970 PART 7 OF 7

SHEET REVISED: MARCH 10, 1993

4:09

5178TITL/4000

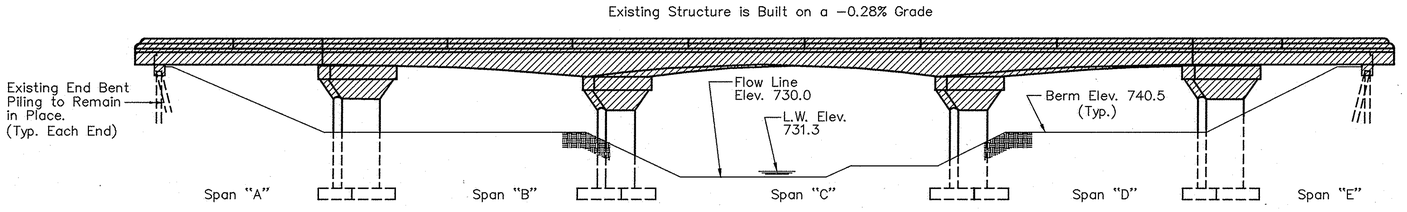

ELEVATION

Scale: 1/16"=1'−0

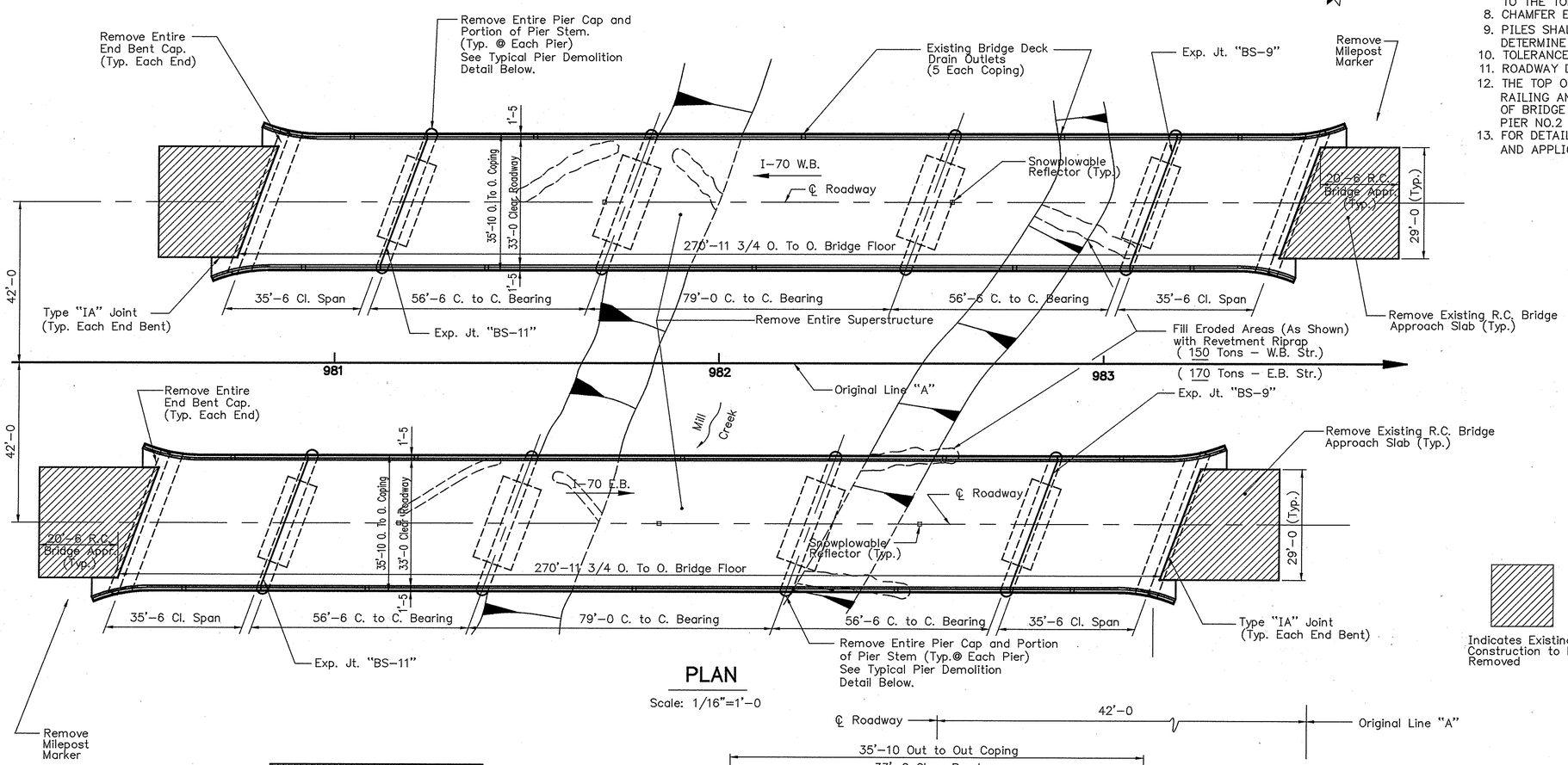

PLAN

Scale: 1/16"=1'−0

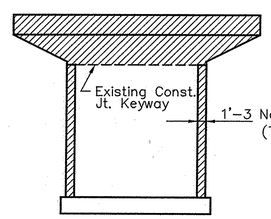

TYPICAL PIER DEMOLITION DETAIL

No Scale

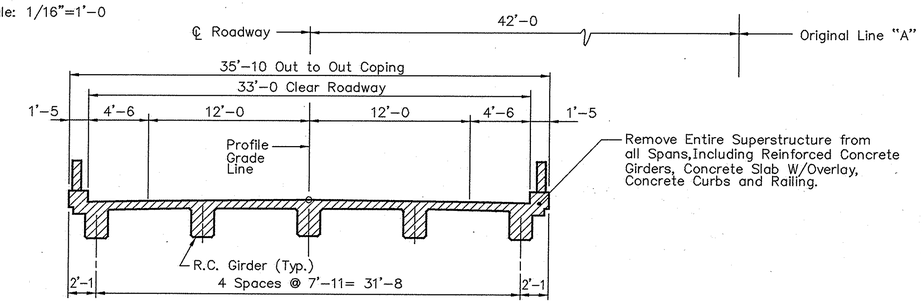

TYPICAL SECTION

Scale: 3/16"=1'−0

GENERAL NOTES

1. PLANS FOR THE EXISTING STRUCTURE ARE ON FILE IN THE CENTRAL OFFICE AS BRIDGE FILE NUMBERS I−70−51−5178, 5178A AND 5178B. THESE PLANS ARE AVAILABLE ON REQUEST.
2. REINFORING STEEL COVER SHALL BE 2 1/2" IN TOP AND 1" MIN. IN BOTTOM OF FLOOR SLABS, 3" IN FOOTINGS, EXCEPT BOTTOM STEEL WHICH SHALL BE 4", AND 2" IN ALL OTHER PARTS, UNLESS NOTED OTHERWISE.
3. CONCRETE IN FOOTINGS TO BE CLASS"B".
4. CONCRETE IN STEEL ENCASED CONCRETE PILES, PIER CAPS AND STEMS TO BE CLASS "A".
5. CONCRETE IN SUPERSTRUCTURE SLAB, INTEGRAL END BENTS AND BARRIER RAILING TO BE CLASS "C".
6. CONTINUOUS CONCRETE POURS SHALL BE REQUIRED BETWEEN CONSTRUCTION JOINTS AS SHOWN IN DETAIL PLANS.
7. THE BOUNDARIES OF FULL DEPTH REMOVAL AREAS SHALL BE SAW CUT. ALL SAW CUTS SHALL BE A MINIMUM DEPTH OF 1 INCH BELOW THE ORIGINAL SURFACE OR TO THE TOP OF REINFORCING STEEL IF COVER IS LESS THAN 1 INCH.
8. CHAMFER EXPOSED CORNERS OF CONCRETE 1 INCH, UNLESS NOTED.
9. PILES SHALL HAVE MINIMUM BEARING VALUE SHOWN ON DETAIL DRAWINGS. DETERMINE PILE LENGTHS BY SECTION 701 OF THE SPECIFICATIONS.
10. TOLERANCE IN POSITION OF PILE HEAD MAXIMUM 2" IN END BENTS.
11. ROADWAY DRAINS TYPE "OS−D" TO BE PLACED AS SHOWN ON DRAWING R2.
12. THE TOP OF BRIDGE DECK, ALL EXPOSED AREAS OF CONCRETE BARRIER RAILING AND TRANSITIONS, FACE AND END OF DECK COPINGS, UNDERSIDE OF BRIDGE DECK FROM COPING TO FACE OF EXTERIOR BEAM AND TOP OF PIER NO.2 AND PIER NO.5 CAPS TO BE SURFACE SEALED.
13. FOR DETAILS OF STEEL ENCASED CONCRETE PILES, SEE BRIDGE STANDARD C1 AND APPLICABLE ARTICLES IN THE SPECIFICATIONS.

STANDARD DRAWINGS

BRIDGE	ROAD	PURPOSE
BR−1		CONCRETE BRIDGE RAILING TRANSITION TYPE "TGB"
BR−1A		CONCRETE BRIDGE RAILING TRANSITION TYPE "TGB"
C1		REINFORCING BAR NOTES, BAR BENDING
		DETAILS AND PILE SHELL FIELD SPLICES
C3		TYPE "IA" JOINT, CONST. JOINT TYPE "A" AND
		OPTIONAL RAILING VERTICAL REINFORCING SPLICE
C5		PRECAST DECK PANEL DETAILS
D		ROADWAY DRAINS TYPE "OS−D"
PB1		TYPE I PRESTRESSED CONCRETE I−BEAM
PB3		TYPE III PRESTRESSED CONCRETE I−BEAM
PB10		TOLERANCES FOR PRESTRESSED BEAMS
PB11		ELASTOMERIC BEARING PADS
S1		"B"BORROW FOR STRUCTURE BACKFILL
		AND 6"ø F.B.C.P.C.S. PIPE
	A−JOINTS	WIRE FABRIC & LONGITUDINAL JOINT DETAIL
	B−JOINTS	TERMINAL JOINT DETAIL
	MT 19 TRAFFIC	SNOWPLOWABLE RAISED PAVEMENT MARKERS

Indicates Existing Construction to be Removed

EXISTING STRUCTURE GENERAL PLAN

CONTINUOUS R.C. GIRDER BRIDGE − TWIN STRUCTURES
5 SPANS: 1 @ 35'−6, 1 @ 56'−6, 1 @ 79'−0, 1 @ 56'−6, 1 @ 35'−6
33'−0 CLEAR ROADWAY SKEW: 20° 00' 00" RT.

I−70 OVER MILL CREEK

INDIANA DEPARTMENT OF TRANSPORTATION

PUTNAM COUNTY

SCALE: As Noted DATE: 10/21 1993

Thomas S. Sharp

DRAWING: R1 OF R21 SHEET: 2 OF 37
PROJECT: IM−70−2(072)
BRIDGE CONTRACT NO. R-20970
BRIDGE FILE: I−70−51−5178C

REGISTERED THOMAS S. SHARP 16806 STATE OF INDIANA PROFESSIONAL ENGINEER

5178EXGP/192

DESIGNED: MP 9/93 CHECKED: TS 10/93
DRAWN: MKM 9/93 CHECKED: LS 10/93
REVISED: CHECKED:
SHEET REVISED: JUNE 30, 1992

PLOT DATE & TIME: OCT 13, 1993 − 13:31:35

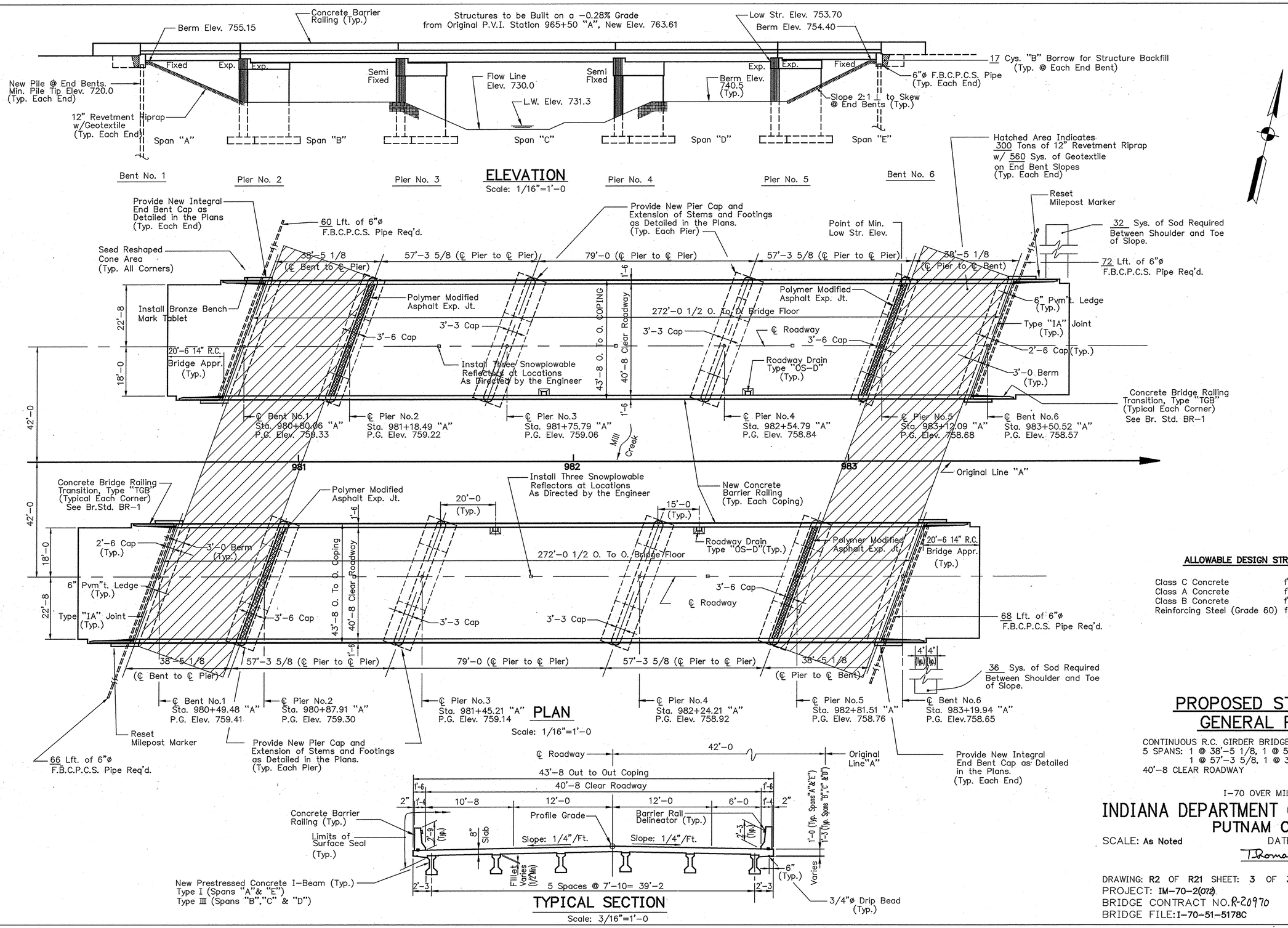

ALLOWABLE DESIGN STRESSES

Class C Concrete	f'_c = 4000 psi
Class A Concrete	f'_c = 3500 psi
Class B Concrete	f'_c = 3000 psi
Reinforcing Steel (Grade 60)	f_y = 60000 psi

PROPOSED STRUCTURE GENERAL PLAN

CONTINUOUS R.C. GIRDER BRIDGE – TWIN STRUCTURES
5 SPANS: 1 @ 38'-5 1/8, 1 @ 57'-3 5/8, 1 @ 79'-0, 1 @ 57'-3 5/8, 1 @ 38'-5 1/8
40'-8 CLEAR ROADWAY SKEW: 20° 00' 00" RT.

I-70 OVER MILL CREEK

INDIANA DEPARTMENT OF TRANSPORTATION
PUTNAM COUNTY

SCALE: As Noted DATE: 10/21 1993

Thomas S. Sharp

THOMAS S. SHARP REGISTERED 16806 STATE OF INDIANA PROFESSIONAL ENGINEER

DRAWING: R2 OF R21 SHEET: 3 OF 37
PROJECT: IM-70-2(072)
BRIDGE CONTRACT NO. R-20970
BRIDGE FILE: I-70-51-5178C

5178NWGP/192

DESIGNED MP 9/93 CHECKED TS 10/93
DRAWN MDL 8/93 CHECKED LS 10/93
REVISED CHECKED

SHEET REVISED: JUNE 30, 1992

PLOT DATE & TIME: OCT 13, 1993 – 13:28:34

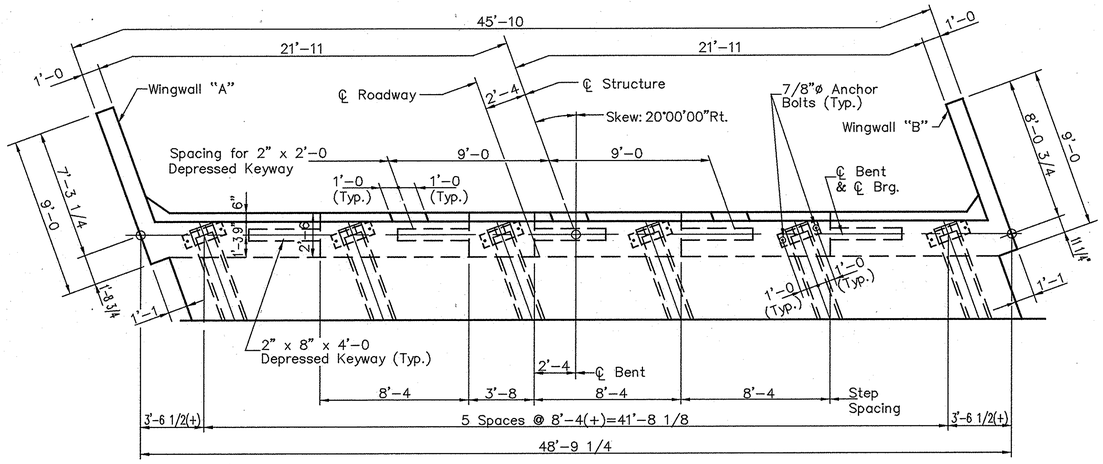

PLAN

(THIS VIEW SHOWS CONCRETE DIMENSIONS AND ELEVATION CALL-OUTS)

NOTE:

SOUTH END-BENT NO. 1 W.B.
NORTH END-BENT NO. 6 E.B.

NOTE:

NORTH END-BENT NO. 1 W.B.
SOUTH END-BENT NO. 6 E.B.

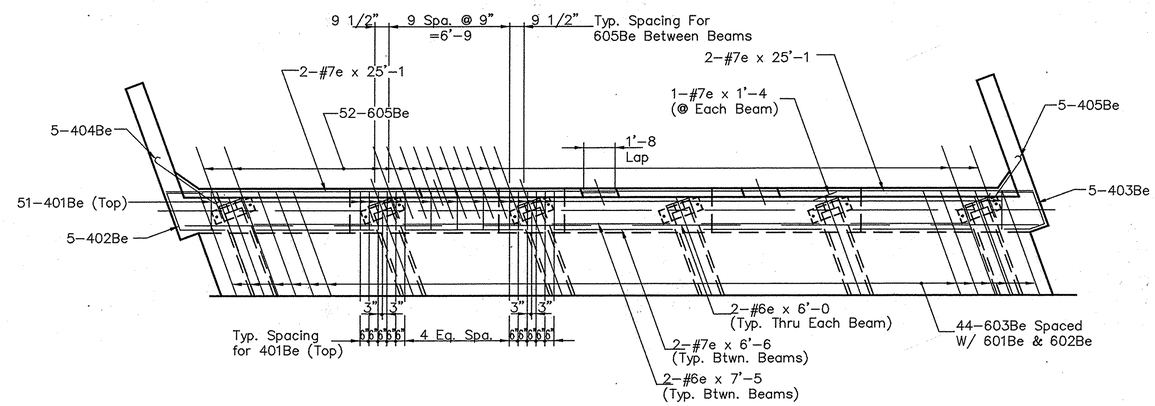

PLAN

(THIS VIEW SHOWS STEEL SPACING AND CALL-OUTS)

NOTE:

402Be, 403Be, 404Be & 405Be to be spaced with rear face horizontal reinforcing steel (See Section "A-A")

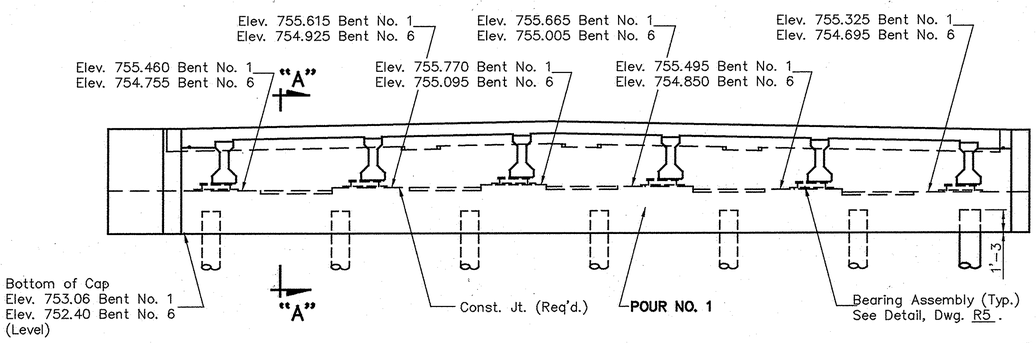

ELEVATION

(THIS VIEW SHOWS CONCRETE DIMENSIONS AND ELEVATION CALL-OUTS)

PILING:

1-14"ø, 0.203" Thick, Steel Encased Concrete Pile x 35'-0 Driven To 35 Ton Minimum Bearing.

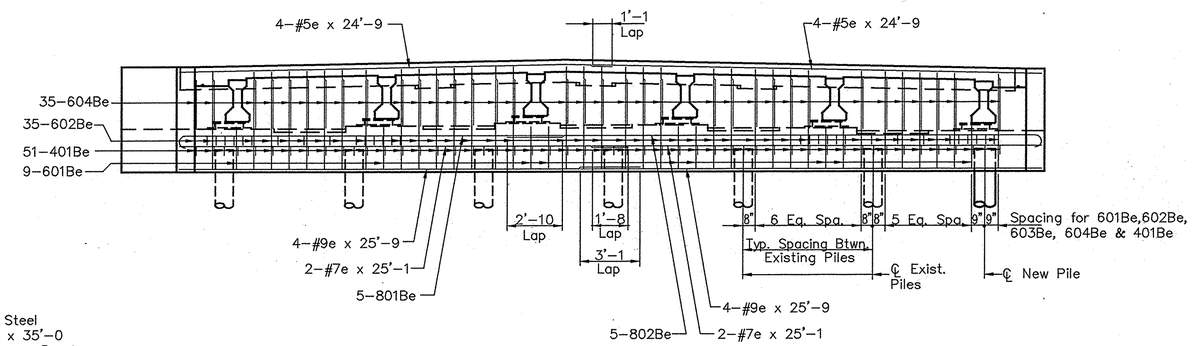

ELEVATION

(THIS VIEW SHOWS STEEL SPACING AND CALL-OUTS)

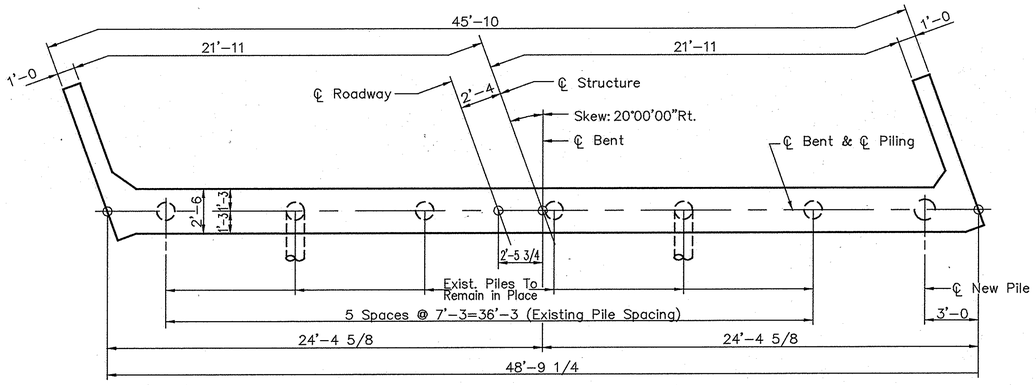

PILE PLAN LAYOUT

Scale: 1/4"=1'-0

NOTES:

1. For reinforcing bar notes, see Br. Std. C1.
2. For general notes, see Dwg. R1 .
3. For Bill of Materials and additional details, see Dwg. R5 .
4. 7/8ø Anchor Bolts to be preset in concrete pour no. 1.
5. Concrete pour above required construction joint to be poured with superstructure slab.

BENT NO. 1 W.B. & NO. 6 E.B.
INDIANA DEPARTMENT OF TRANSPORTATION

SCALE: 1/4"=1'-0 DATE: 10/21 1993

Thomas S. Sharp

DRAWING: R3 OF R21 SHEET: 4 OF 37
PROJECT: IM-70-2(072)
BRIDGE CONTRACT NO. R-20970
BRIDGE FILE: I-70-51-5178C

THOMAS S. SHARP REGISTERED 16806 STATE OF INDIANA PROFESSIONAL ENGINEER

5178WBT1/48

DESIGNED: MP 8/93 CHECKED: TS 10/93
DRAWN: SLO 8/93 CHECKED: MP 10/93
REVIEWED: SHEET REVISED: SEPTEMBER 24, 1992

PLOT DATE & TIME: OCT 08, 1993 - 12:19:34

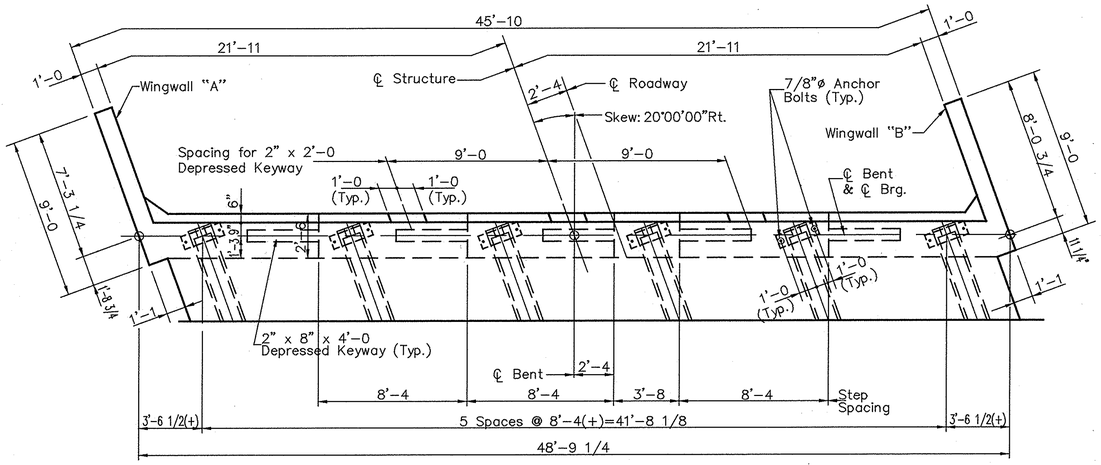

PLAN

(THIS VIEW SHOWS CONCRETE DIMENSIONS AND ELEVATION CALL-OUTS)

NOTE:

SOUTH END-BENT NO. 1 E.B.
NORTH END-BENT NO. 6 W.B.

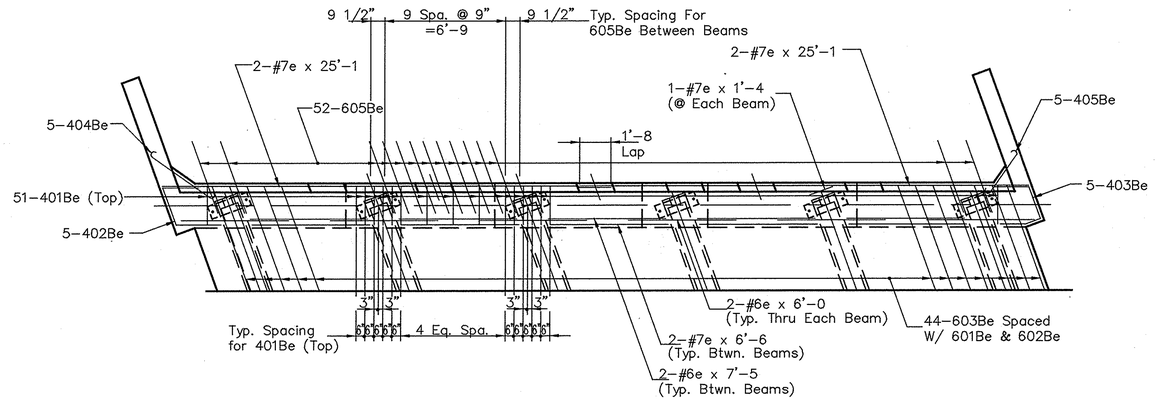

PLAN

(THIS VIEW SHOWS STEEL STEEL SPACING AND CALL-OUTS)

NOTE:

NORTH END-BENT NO. 1 E.B.
SOUTH END-BENT NO. 6 W.B.

NOTE:

402Be, 403Be, 404Be & 405Be to be spaced with rear face cap horizontal reinforcing steel. (See Section "A-A")

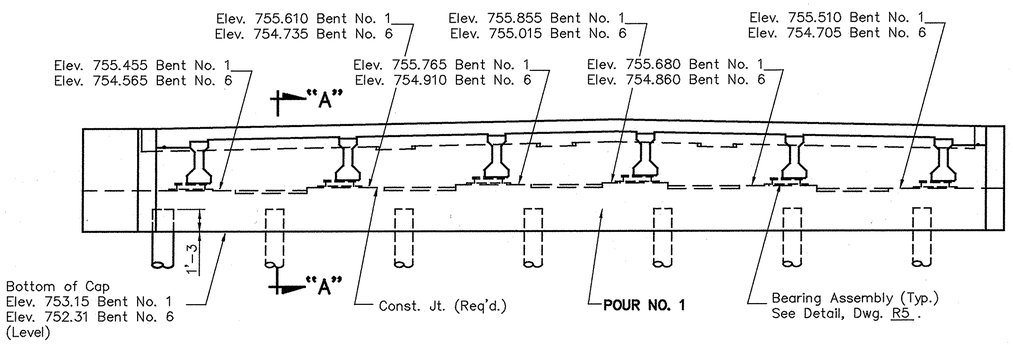

ELEVATION

(THIS VIEW SHOWS CONCRETE DIMENSIONS AND ELEVATION CALL-OUTS)

PILING:

1-14"ø, 0.203" Thick, Steel Encased Concrete Piles x 35'-0 Driven To 35 Ton Minimum Bearing.

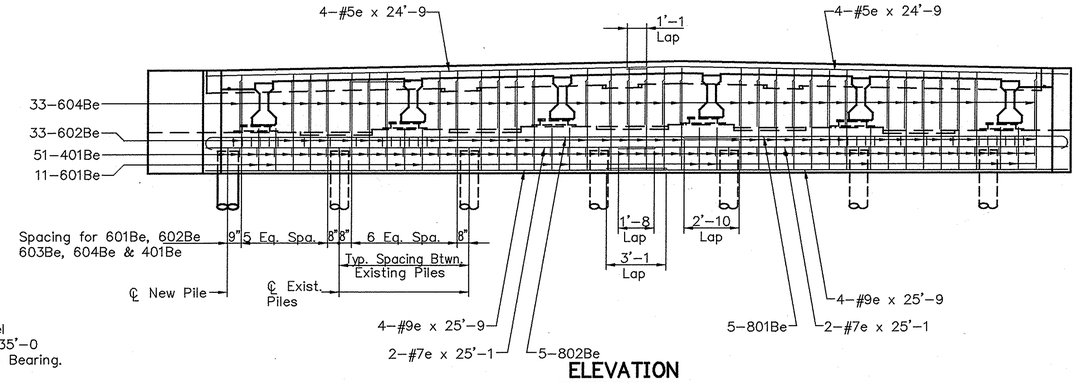

ELEVATION

(THIS VIEW SHOWS STEEL STEEL SPACING AND CALL-OUTS)

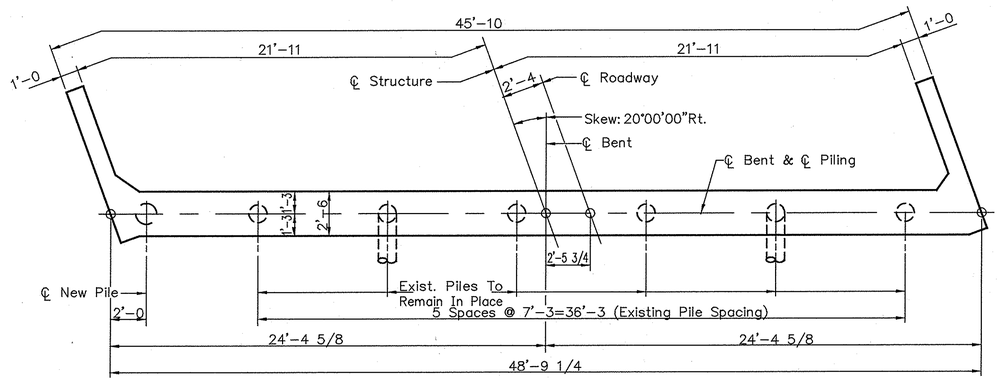

PILE PLAN LAYOUT

Scale: 1/4"=1'-0

NOTES:

1. For Notes, See Dwg. R3 .

BENT NO. 1 E.B. & NO. 6 W.B.
INDIANA DEPARTMENT OF TRANSPORTATION

SCALE: 1/4"=1'-0 DATE: 10/21 1993

Thomas S. Sharp

DRAWING: R4 OF R21 SHEET: 5 OF 37
PROJECT: IM-70-2(072)
BRIDGE CONTRACT NO. R-20970
BRIDGE FILE: I-70-51-5178C

THOMAS S. SHARP REGISTERED 16806 STATE OF INDIANA PROFESSIONAL ENGINEER

5178EBT1/48

PLOT DATE & TIME: OCT 13, 1993 - 13:27:36

DESIGNED: MP 9/93 CHECKED: TS 10/93
DRAWN: SLG 9/93 CHECKED: MP 10/93
REVISED: CHECKED:
SHEET REVISED: SEPTEMBER 24, 1992

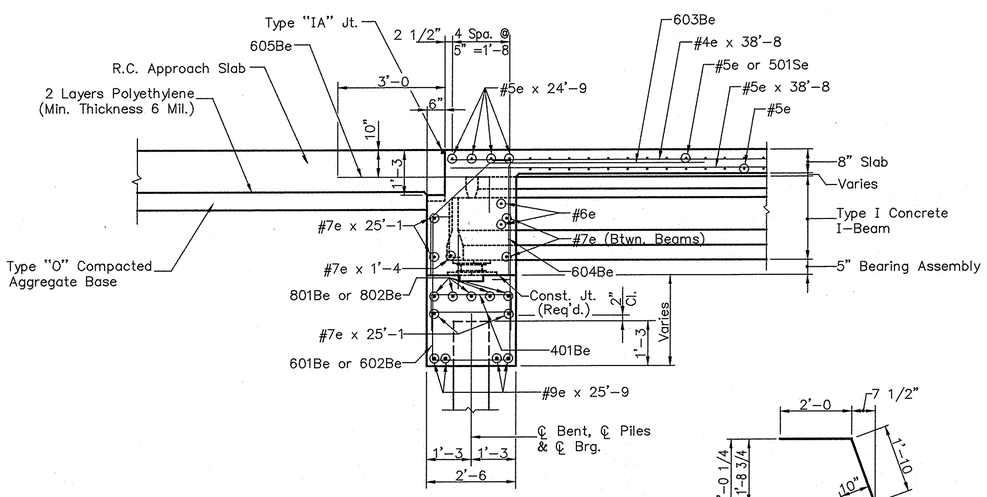

SECTION "A-A"

SCALE: 1/2"=1'-0

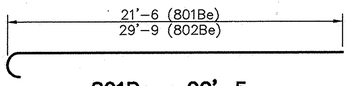

801Be x 22'-5
802Be x 30'-8

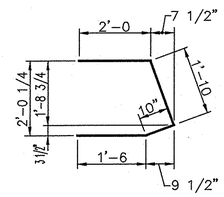

403Be x 6'-2

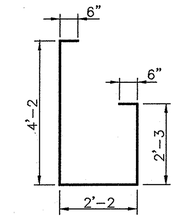

601Be x 9'-7

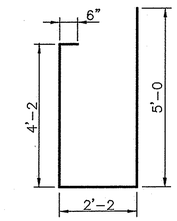

602Be x 11'-10

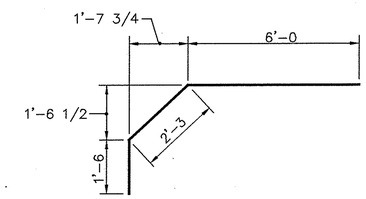

603Be x 9'-9

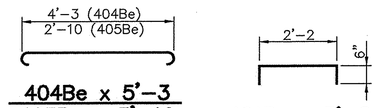

404Be x 5'-3
405Be x 3'-10

401Be x 3'-2

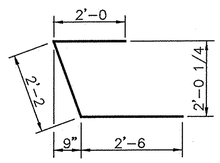

402Be x 6'-8

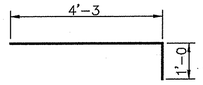

605Be x 5'-3

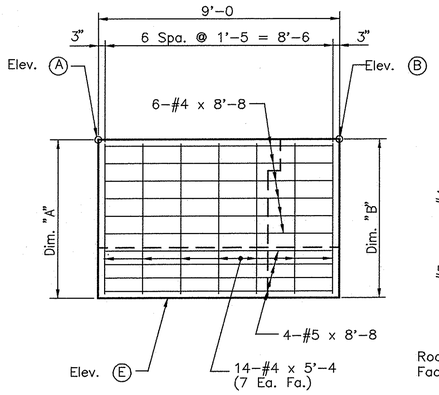

WINGWALL "A"

(SHOWING REINFORCING IN ROADWAY FACE)

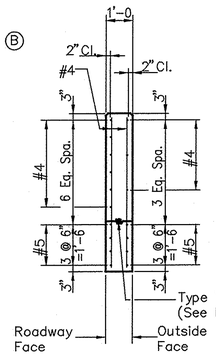

TYPICAL SECTION

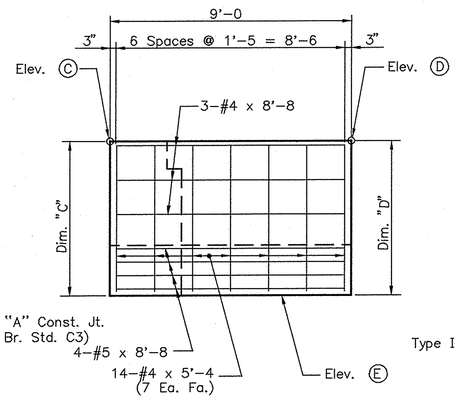

WINGWALL "B"

(SHOWING REINFORCING IN OUTSIDE FACE)

WINGWALL DETAILS

Scale: 3/8"=1'-0

TABLE OF WINGWALL ELEVATIONS & DIMENSIONS									
Location	Elev. A	Elev. B	Elev. C	Elev. D	Elev. E	Dim. "A"	Dim. "B"	Dim. "C"	Dim. "D"
Bent No. 1 W.B.	758.96	758.94	758.79	758.82	753.06	5'-10 3/4	5'-10 1/2	5'-8 3/4	5'-9 1/8
Bent No. 1 E.B.	758.95	758.93	758.98	759.01	753.15	5'-9 5/8	5'-9 3/8	5'-10	5'-10 3/8
Bent No. 6 W.B.	758.02	758.04	758.19	758.16	752.31	5'-8 1/2	5'-8 3/4	5'-10 1/2	5'-10 1/4
Bent No. 6 E.B.	758.21	758.23	758.18	758.15	752.40	5'-9 3/4	5'-10	5'-9 3/8	5'-9

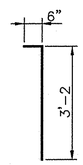

604Be x 3'-8

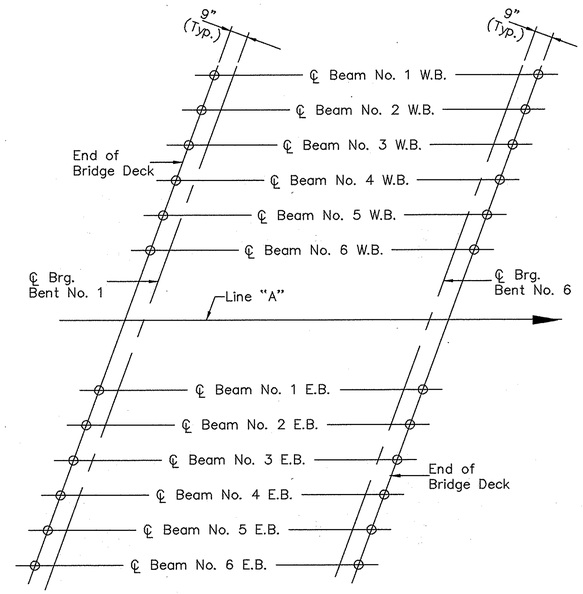

END OF BRIDGE DECK ELEVATIONS

No Scale

END OF BRIDGE DECK ELEVATIONS						
Location	Bm. No.1	Bm. No.2	Bm. No.3	Bm. No.4	Bm. No.5	Bm. No.6
Bent No. 1 W.B.	758.84	759.01	759.18	759.29	759.13	758.98
Bent No. 1 E.B.	759.03	759.20	759.37	759.28	759.12	758.97
Bent No. 6 W.B.	758.08	758.25	758.42	758.52	758.37	758.21
Bent No. 6 E.B.	758.26	758.44	758.61	758.52	758.36	758.21

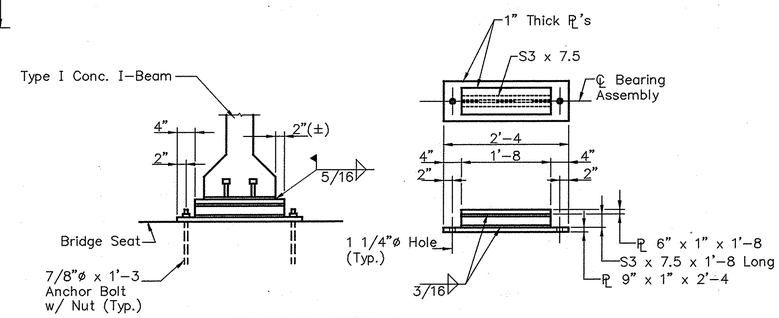

BEARING ASSEMBLY DETAIL

Scale: 3/4"=1'-0

BILL of MATERIALS

Bent No.1 W.B. & No.6 E.B.
(ONE BENT ONLY)

SIZE or MK	NO.of BARS	LENGTH	WEIGHT
#9e	8	25'-9	
TOTAL #9e			700#
801Be	5	22'-5	
802Be	5	30'-8	
TOTAL #8e			709#
#7e	8	25'-1	
#7e	10	6'-6	
#7e	6	1'-4	
TOTAL #7e			560#
601Be	9	9'-7	
602Be	35	11'-10	
603Be	44	9'-9	
604Be	35	3'-8	
605Be	52	5'-3	
#6e	10	7'-5	
#6e	12	6'-0	
TOTAL #6e			2218#
#5e	8	24'-9	
#5e	16	8'-8	
TOTAL #5e			351#
401Be	102	3'-2	
402Be	5	6'-8	
403Be	5	6'-2	
404Be	5	5'-3	
405Be	5	3'-10	
#4e	18	8'-8	
#4e	28	5'-4	
TOTAL #4e			492#
TOTAL EPOXY COATED REINF.			5030#
CONCRETE			
POUR NO. 1 (CLASS C)			12.2 C.Y.
MISCELLANEOUS			
1-14"ø,0.203" THICK, STEEL			
ENCASED CONCRETE PILE x			
35'-0 LONG			35 L.F.

BILL of MATERIALS

Bent No.1 E.B. & No.6 W.B.
(ONE BENT ONLY)

SIZE or MK	NO.of BARS	LENGTH	WEIGHT
#9e	8	25'-9	
TOTAL #9e			700#
801Be	5	22'-5	
802Be	5	30'-8	
TOTAL #8e			709#
#7e	8	25'-1	
#7e	10	6'-6	
#7e	6	1'-4	
TOTAL #7e			560#
601Be	11	9'-7	
602Be	33	11'-10	
603Be	44	9'-9	
604Be	33	3'-8	
605Be	52	5'-3	
#6e	10	7'-5	
#6e	12	6'-0	
TOTAL #6e			2201#
#5e	8	24'-9	
#5e	16	8'-8	
TOTAL #5e			351#
401Be	102	3'-2	
402Be	5	6'-8	
403Be	5	6'-2	
404Be	5	5'-3	
405Be	5	3'-10	
#4e	18	8'-8	
#4e	28	5'-4	
TOTAL #4e			492#
TOTAL EPOXY COATED REINF.			5013#
CONCRETE			
POUR NO. 1 (CLASS C)			12.2 C.Y.
MISCELLANEOUS			
1-14"ø,0.203" THICK, STEEL			
ENCASED CONCRETE PILE x			
35'-0 LONG	35 L.F.		

BENT NO. 1 & NO. 6 DETAILS
INDIANA DEPARTMENT OF TRANSPORTATION

SCALE: AS NOTED

DATE: 10/21 1993

Thomas S. Sharp

DRAWING: R5 OF R21 SHEET: 6 OF 37
PROJECT: IM-70-2(072)
BRIDGE CONTRACT NO. R-20970
BRIDGE FILE: I-70-51-5178C

THOMAS S. SHARP REGISTERED 16806 STATE OF INDIANA PROFESSIONAL ENGINEER

5178BTDT/48

PLOT DATE & TIME: OCT 08, 1993 - 11:47:30

DESIGNED: MP 9/93 CHECKED: TS 10/93
DRAWN: SLG 9/93 CHECKED: MP 10/93
REVISED: CHECKED:
SHEET REVISED: SEPTEMBER 24, 1992

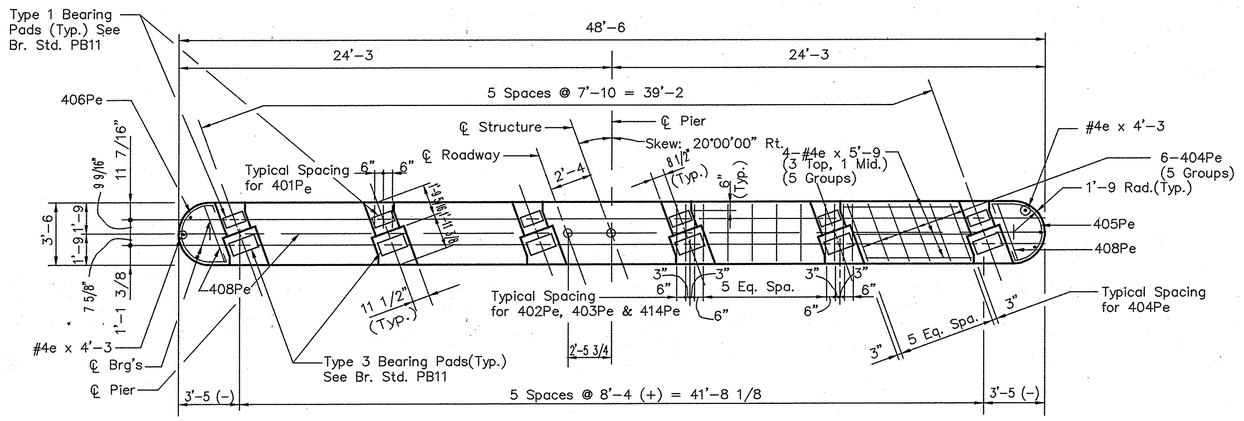

CAP PLAN

Scale: 1/4" = 1'-0

TABLE OF BRIDGE SEAT ELEVATIONS						
LOCATION	A	B	C	D	E	F
PIER NO.2 W.B.	755.605	755.760	755.915	755.810	755.640	755.470
PIER NO.5 E.B.	755.085	755.255	755.425	755.335	755.180	755.025
LOCATION	G	H	I	J	K	L
PIER NO.2 W.B.	754.135	754.290	754.450	754.340	754.170	754.000
PIER NO.5 E.B.	753.650	753.820	753.990	753.900	753.745	753.590

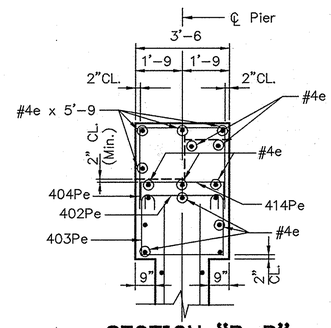

SECTION "B-B"

Scale: 3/8" = 1'-0

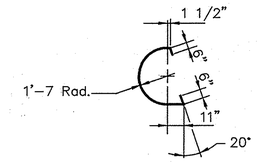

406Pe x 7'-0

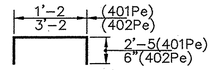

401Pe x 6'-0

402Pe x 4'-2

BILL of MATERIALS

(ONE PIER ONLY)

SIZE or MK	NO.of BARS	LENGTH	WEIGHT
601Pe	52	5'-3	
#6e	64	26'-7	(#5 ONLY)
#6e	64	25'-7	(#2 ONLY)
#6e	8	3'-5	
TOTAL #6e (#2)			2911#
TOTAL #6e (#5)			3007#
502Pe	34	4'-10	
#5e	6	30'-0	
#5e	6	16'-1	
#5e	28	15'-8	
#5e	28	10'-9	
TOTAL #5e			1232#
401Pe	18	6'-0	
402Pe	36	4'-2	
403Pe	44	8'-6	
404Pe	30	9'-4	
405Pe	2	7'-0	
406Pe	2	7'-0	
407Pe	6	6'-10	
408Pe	2	9'-0	
414Pe	12	5'-2	
#4e	9	30'-0	
#4e	9	19'-2	
#4e	3	10'-4	
#4e	20	5'-9	
#4e	6	4'-3	
TOTAL #4e			1119#
TOTAL EPOXY COATED REINF. (PIER #2)			5262#
TOTAL EPOXY COATED REINF. (PIER #5)			5358#
501P	32	8'-8	
#5	12	2'-0	
TOTAL #5			315#
#4	9	15'-2	
#4	9	10'-3	
TOTAL #4			153#
TOTAL UNCOATED REINF.			468#
CONCRETE			
POUR NO. 1 FOOTING CL. B			11.4 C.Y.
POUR NO. 2 FOOTING CL. B			7.7 C.Y.
Total CL. B			19.1 C.Y.
POUR NO. 3 STEM CL. A			
PIER NO. 2			24.5 C.Y.
POUR NO. 3 STEM CL. A			
PIER NO. 5			25.8 C.Y.
POUR NO. 4 STEM CL. A			
PIER NO. 2			17.2 C.Y.
POUR NO. 4 STEM CL. A			
PIER NO. 5			18.0 C.Y.
POUR NO. 5 STEM CL.A			
PIER NO. 2			40.0 C.Y.
POUR NO. 5 STEM CL.A			
PIER NO. 5			39.7 C.Y.
TOTAL CL. A PIER NO. 2 W.B.			81.7 C.Y.
TOTAL CL. A PIER NO. 5 E.B.			83.5 C.Y.
MISCELLANEOUS			
SURFACE SEAL			246 S.F.
FIELD DRILLED HOLES IN CONCRETE			20 EACH

NOTE:

SOUTH END – PIER NO.2 W.B.
NORTH END – PIER NO.5 E.B.

NOTE:

NORTH END – PIER NO.2 W.B.
SOUTH END – PIER NO.5 E.B.

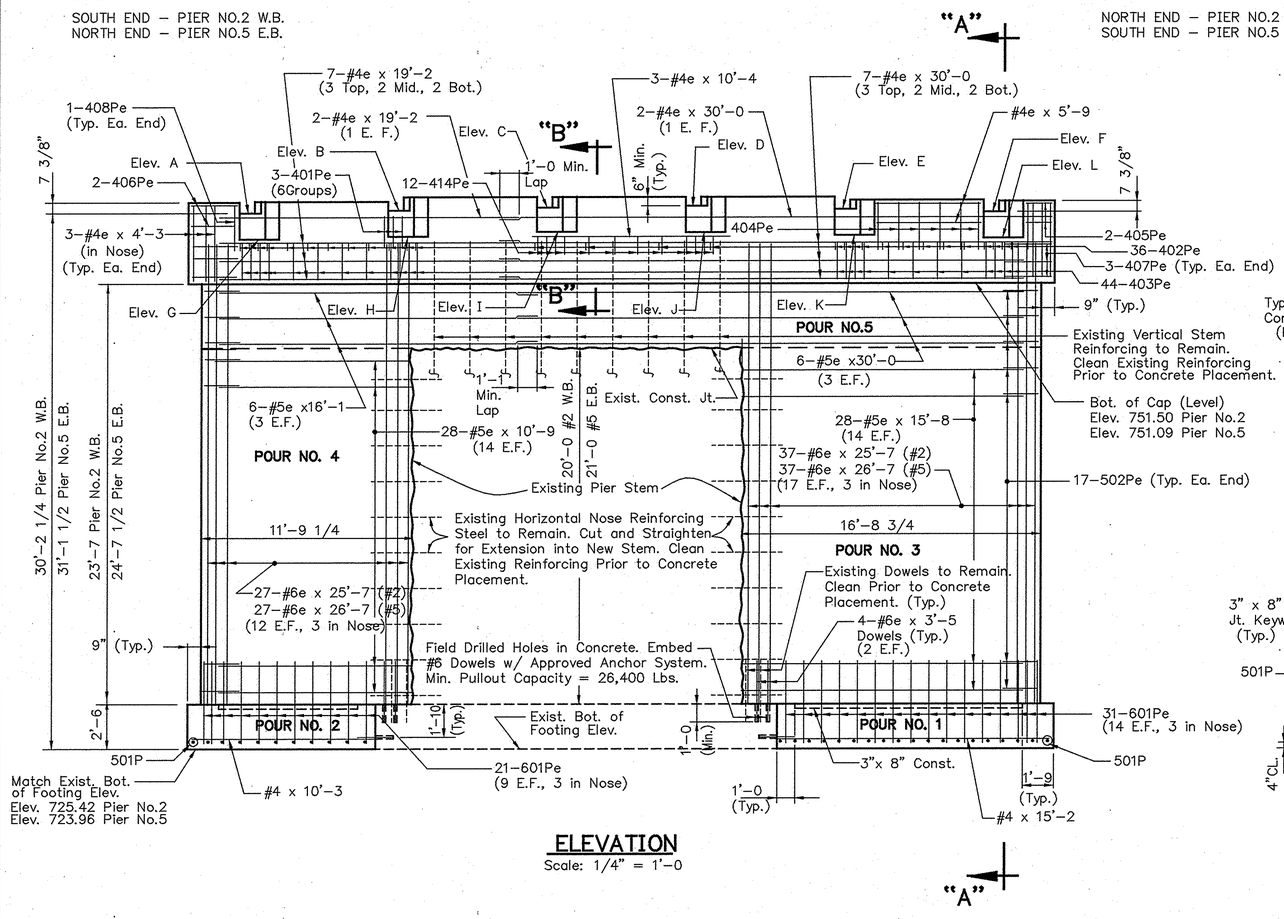

ELEVATION

Scale: 1/4" = 1'-0

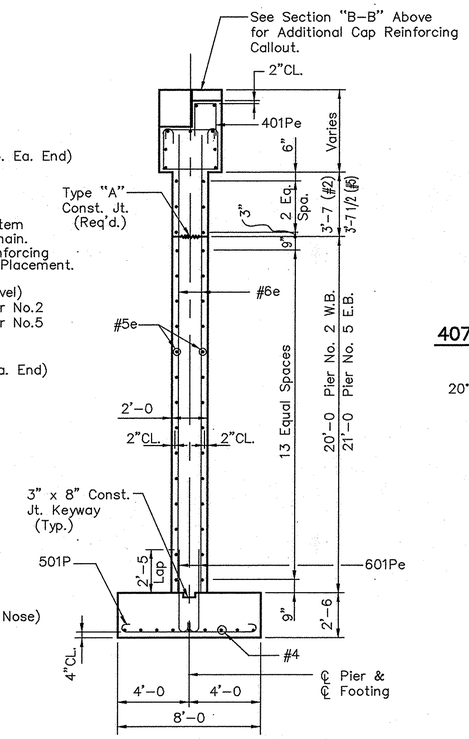

SECTION "A-A"

Scale: 1/4" = 1'-0

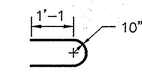

502Pe x 4'-10

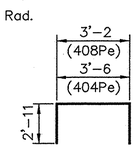

404Pe x 9'-4

408Pe x 9'-0

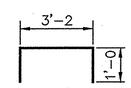

414Pe x 5'-2

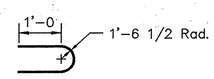

407Pe x 6'-10

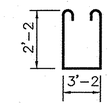

403Pe x 8'-6

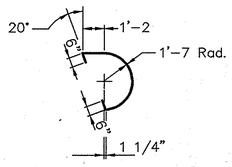

405Pe x 7'-0

NOTES:

1. For Notes, See Dwg. R7.

PIER NO.2 W.B. & NO.5 E.B.
INDIANA DEPARTMENT OF TRANSPORTATION

SCALE: AS NOTED DATE: 10/21 1993

Thomas S. Sharp

DRAWING: R6 OF R21 SHEET: 7 OF 37
PROJECT: IM-70-2(072)
BRIDGE CONTRACT NO. R-20970
BRIDGE FILE: I-70-51-5178C

REGISTERED THOMAS S. SHARP 16806 STATE OF INDIANA PROFESSIONAL ENGINEER

5178P2W5/48

PLOT DATE & TIME: OCT 08, 1993 - 12:16:40

DESIGNED: MP 8/93 CHECKED: TS 10/93
DRAWN: MKM 8/93 CHECKED: MP 10/93
REVISED: CHECKED:
SHEET REVISED: SEPTEMBER 24, 1992

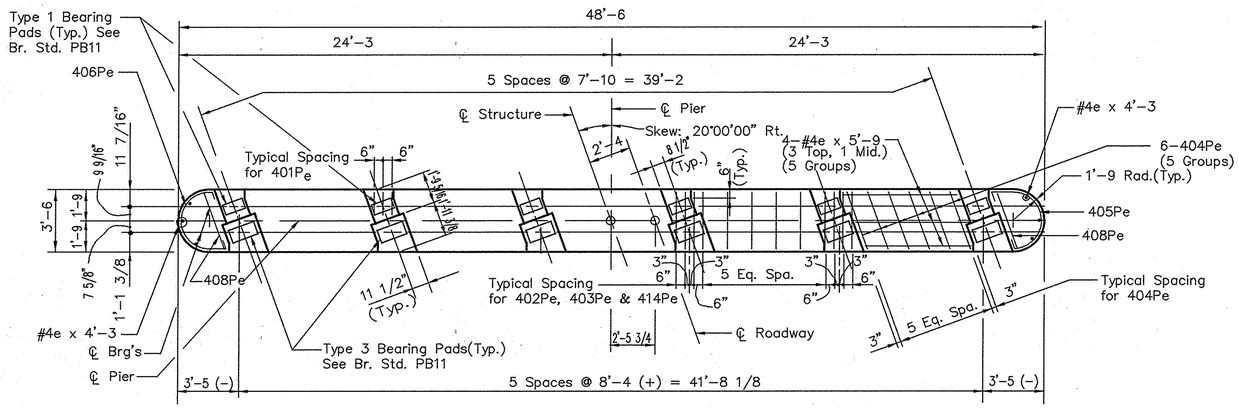

CAP PLAN

Scale: 1/4" = 1'-0

TABLE OF BRIDGE SEAT ELEVATIONS						
LOCATION	A	B	C	D	E	F
PIER NO.2 E.B.	755.600	755.755	755.910	756.000	755.825	755.655
PIER NO.5 W.B.	754.895	755.065	755.235	755.345	755.185	755.030
LOCATION	G	H	I	J	K	L
PIER NO.2 E.B.	754.130	754.285	754.440	754.530	754.360	754.190
PIER NO.5 W.B.	753.460	753.635	753.805	753.910	753.755	753.600

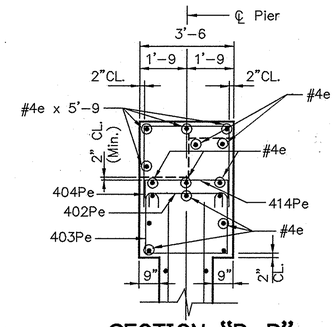

SECTION "B-B"

Scale: 3/8" = 1'-0

BILL of MATERIALS
(ONE PIER ONLY)

SIZE or MK	NO.of BARS	LENGTH	WEIGHT
601Pe	52	5'-3	
#6e	64	25'-7	
#6e	8	3'-5	
TOTAL #6e			2911#
502Pe	34	4'-10	
#5e	6	30'-0	
#5e	6	16'-1	
#5e	28	15'-8	
#5e	28	10'-9	
TOTAL #5e			1232#
401Pe	18	6'-0	
402Pe	36	4'-2	
403Pe	44	8'-6	
404Pe	30	9'-4	
405Pe	2	7'-0	
406Pe	2	7'-0	
407Pe	6	6'-10	
408Pe	2	9'-0	
414Pe	12	5'-2	
#4e	9	30'-0	
#4e	9	19'-2	
#4e	3	10'-4	
#4e	20	5'-9	
#4e	6	4'-3	
TOTAL #4e			1119#
TOTAL EPOXY COATED REINF.			5262#
501P	32	8'-8	
#5	12	2'-0	
TOTAL #5			315#
#4	9	15'-2	
#4	9	10'-3	
TOTAL #4			153#
TOTAL UNCOATED REINF.			468#
CONCRETE			
POUR NO. 1 FOOTING CL. B			11.4 C.Y.
POUR NO. 2 FOOTING CL. B			7.7 C.Y.
Total CL. B			19.1 C.Y.
POUR NO. 3 STEM CL. A			24.5 C.Y.
POUR NO. 4 STEM CL. A			17.2 C.Y.
POUR NO. 5 STEM CL.A			
PIER NO. 2			39.9 C.Y.
POUR NO. 5 STEM CL.A			
PIER NO. 5			39.8 C.Y.
TOTAL CL. A PIER NO. 2 E.B.			81.6 C.Y.
TOTAL CL. A PIER NO. 5 W.B.			81.5 C.Y.
MISCELLANEOUS			
SURFACE SEAL			246 S.F.
FIELD DRILLED HOLES IN CONCRETE			20 EACH

NOTE:

SOUTH END – PIER NO.2 E.B.
NORTH END – PIER NO.5 W.B.

NOTE:

NORTH END – PIER NO.2 E.B.
SOUTH END – PIER NO.5 W.B.

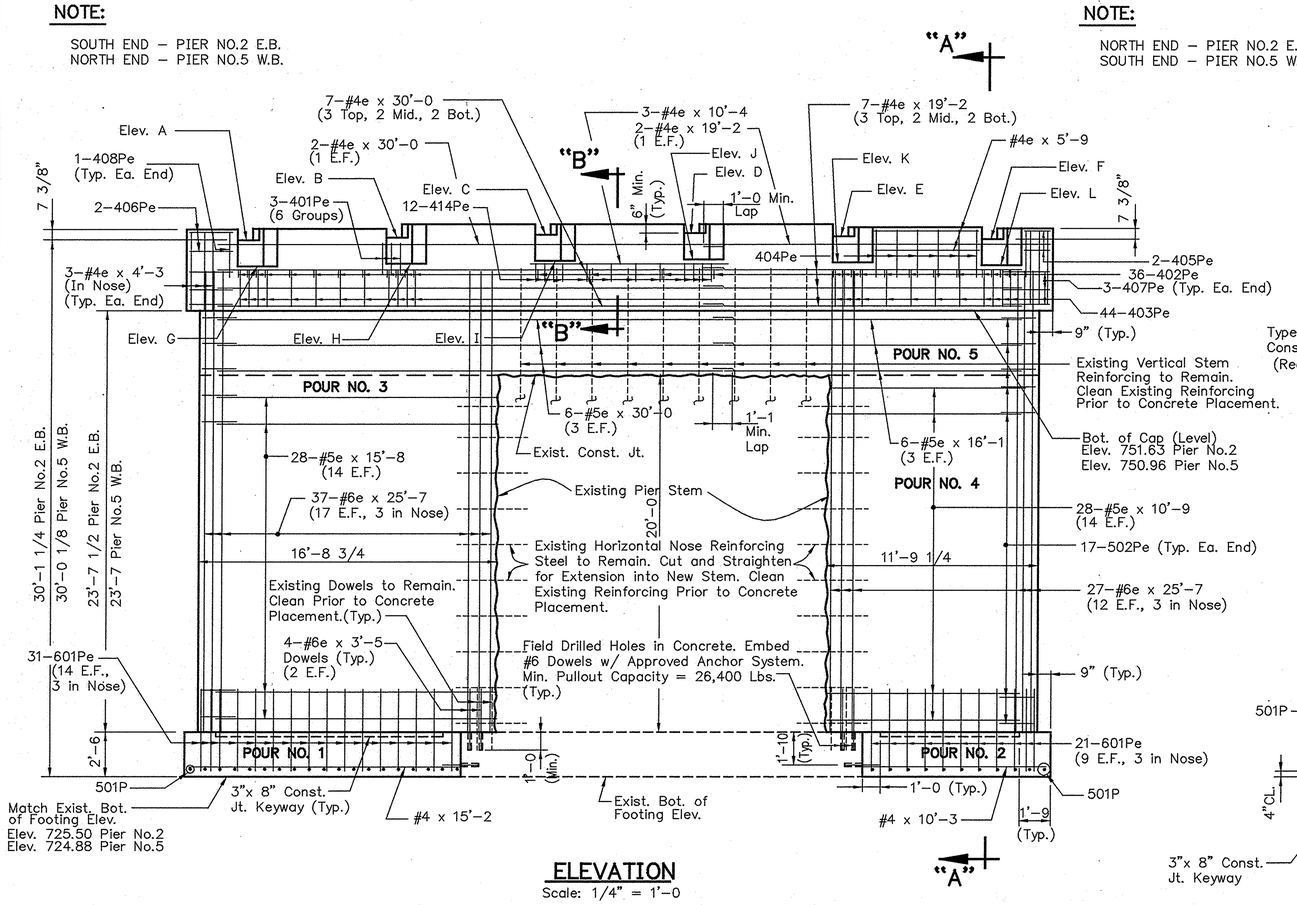

ELEVATION

Scale: 1/4" = 1'-0

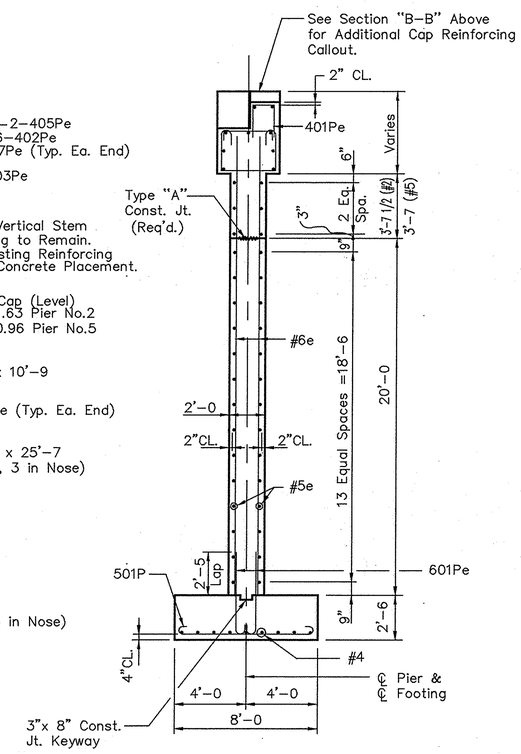

SECTION "A-A"

Scale: 1/4" = 1'-0

NOTES:

1. For Reinforcing Bar Notes, See Br. Std. C1.
2. For General Notes and Pier Demolition Detail, See Dwg. R1.
3. For Type "A" Const. Jt., See Br. Std. C3.
4. For Footing Plan, See Dwg. R10.
5. E.F. & Ea. Fa. Both Denote Each Face.

PIER NO.2 E.B. & NO.5 W.B.
INDIANA DEPARTMENT OF TRANSPORTATION

SCALE: AS NOTED DATE: 10/21 1993

Thomas S. Sharp

DRAWING: R7 OF R21 SHEET: 8 OF 37
PROJECT: IM-70-2(072)
BRIDGE CONTRACT NO.R-20970
BRIDGE FILE: I-70-51-5178C

5178P2E5/48

PLOT DATE & TIME: OCT 08, 1993 – 12:17:48
DESIGNED: MP 8/93 CHECKED: TS 10/93
DRAWN: MGM 8/93 CHECKED: MP 10/93
REVISED: CHECKED:
SHEET REVISED: SEPTEMBER 24, 1992

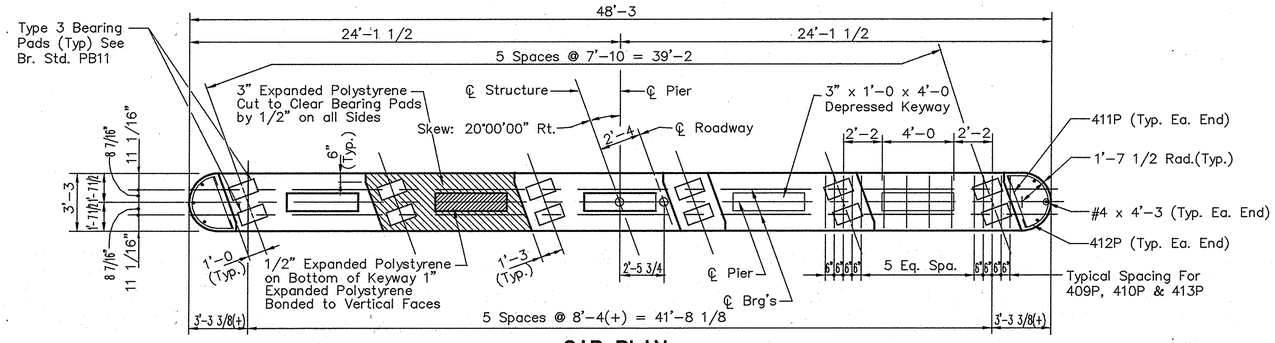

CAP PLAN

Scale: 1/4" = 1'-0

NOTE:

NORTH END

NOTE:

SOUTH END

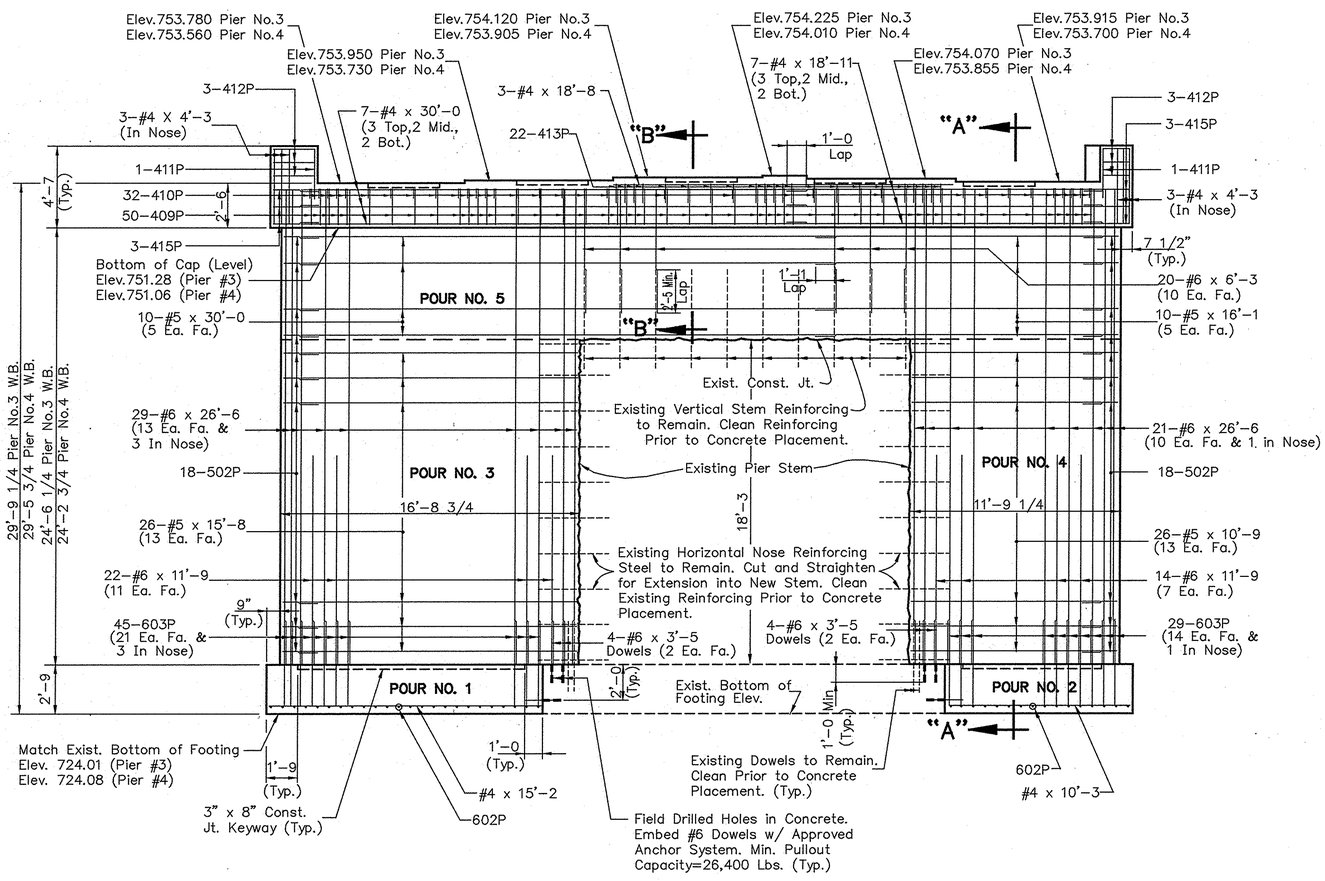

ELEVATION

Scale: 1/4" = 1'-0

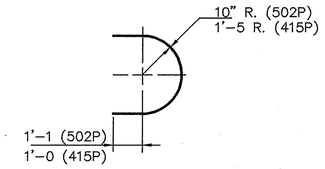

502P x 4'-10
415P x 6'-6

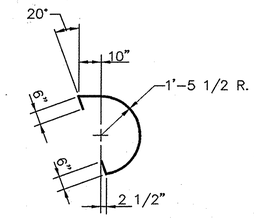

412P x 5'-11

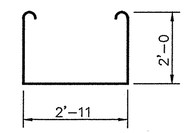

409P x 7'-11

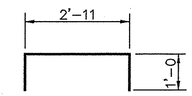

413P x 4'-11

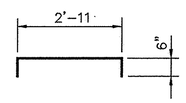

410P x 3'-11

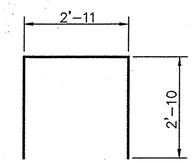

411P x 8'-7

BILL of MATERIALS

(ONE PIER ONLY)

SIZE or MK	NO.of BARS	LENGTH	WEIGHT
602P	40	11'-4	
603P	74	5'-6	
#6	50	26'-6	
#6	36	11'-9	
#6	20	6'-3	
#6	8	3'-5	
TOTAL #6			4147#
502P	36	4'-10	
#5	10	30'-0	
#5	10	16'-1	
#5	26	15'-8	
#5	26	10'-9	
#5	16	2'-0	
TOTAL #5			1412#
409P	50	7'-11	
410P	32	3'-11	
411P	2	8'-7	
412P	6	5'-11	
413P	22	4'-11	
415P	6	6'-6	
#4	7	30'-0	
#4	7	18'-11	
#4	3	18'-8	
#4	11	15'-2	
#4	11	10'-3	
#4	6	4'-3	
TOTAL #4			952#
TOTAL UNCOATED REINF.			6511#
CONCRETE			
POUR NO. 1 FOOTING CL. B			16.5 C.Y.
POUR NO. 2 FOOTING CL. B			11.2 C.Y.
TOTAL CL. B			27.7 C.Y.
POUR NO.3 STEM CL. A			22.4 C.Y.
POUR NO.4 STEM CL. A			15.7 C.Y.
POUR NO. 5 STEM & CAP			
CL. A PIER NO. 3			37.8 C.Y.
POUR NO. 5 STEM & CAP			
CL. A PIER NO. 4			36.8 C.Y.
TOTAL CL. A PIER NO.3			75.9 C.Y.
TOTAL CL. A PIER NO.4			74.9 C.Y.
MISCELLANEOUS			
FIELD DRILLED HOLES IN CONCRETE			24 EA.

NOTES:

1. For Sections "A-A" & "B-B", See Dwg. R9 .
2. For Additional Notes, See Dwg. R7 .

PIER NO. 3 & 4 W.B.
INDIANA DEPARTMENT OF TRANSPORTATION

SCALE: AS NOTED

DATE: 10/21 1993

Thomas S. Sharp

DRAWING: R8 OF R21 SHEET: 9 OF 37
PROJECT: IM-70-2(072)
BRIDGE CONTRACT NO. R-20970
BRIDGE FILE: I-70-51-5178C

THOMAS S. SHARP REGISTERED 16806 STATE OF INDIANA PROFESSIONAL ENGINEER

5178WBP3/48

PLOT DATE & TIME: OCT 07, 1993 - 14:33:27

DESIGNED: MP 9/93 CHECKED: TS 10/93
DRAWN: MKM 9/93 CHECKED: MP 10/93
REVISED: SLG 9/93 CHECKED:
SHEET REVISED: SEPTEMBER 24, 1992

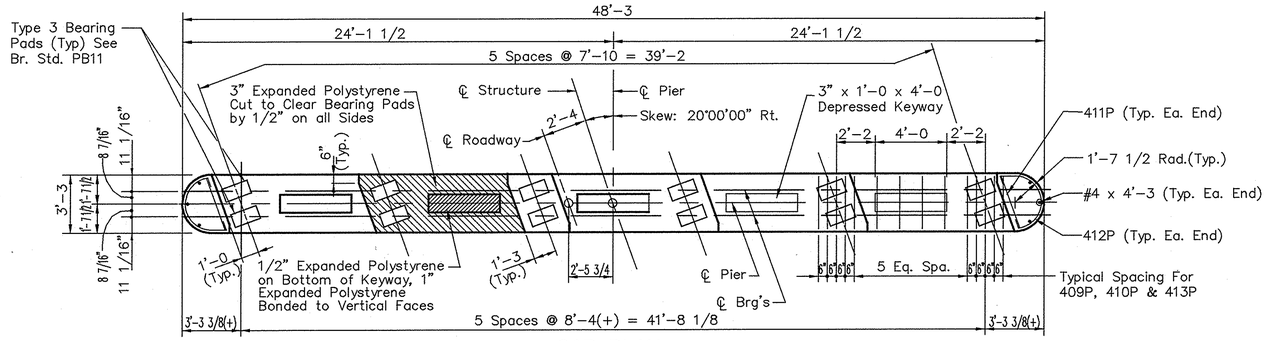

CAP PLAN

Scale: 1/4" = 1'-0

NOTE:

NORTH END

NOTE:

SOUTH END

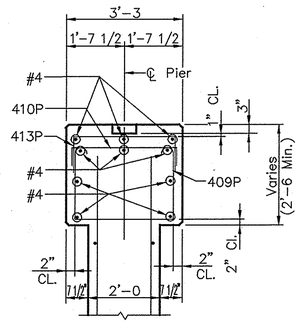

SECTION "B-B"

Scale: 1/2" = 1'-0

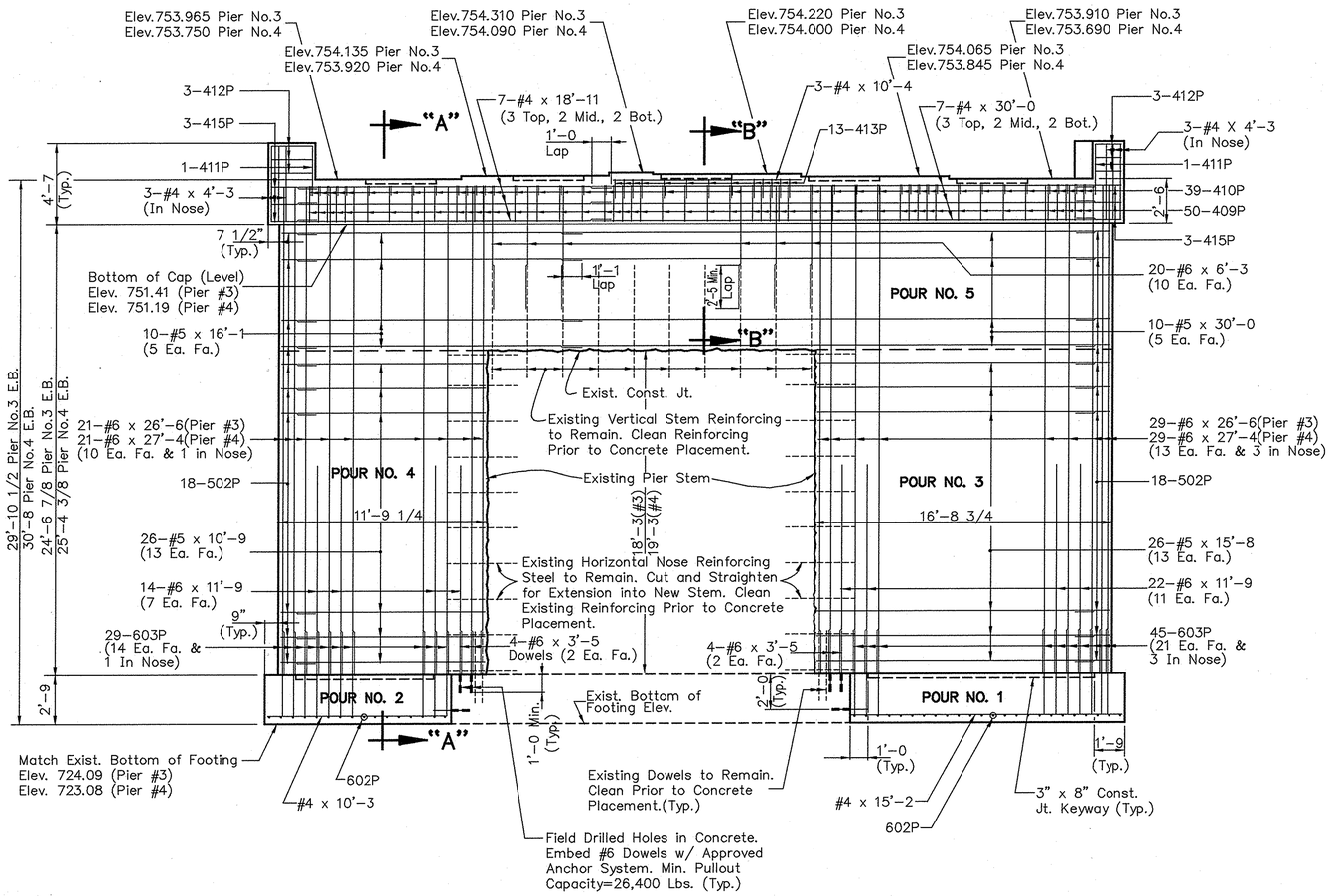

ELEVATION

Scale: 1/4" = 1'-0

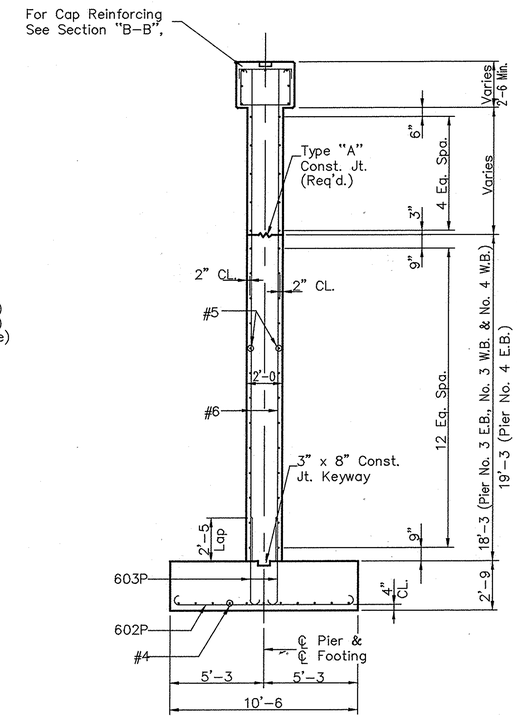

SECTION "A-A"

Scale: 1/4" = 1'-0

BILL of MATERIALS

(ONE PIER ONLY)

SIZE or MK	NO.of BARS	LENGTH	WEIGHT
602P	40	11'-4	
603P	74	5'-6	
#6	50	27'-4	(#4 ONLY)
#6	50	26'-6	(#3 ONLY)
#6	36	11'-9	
#6	20	6'-3	
#6	8	3'-5	
TOTAL #6 (#3)			4147#
TOTAL #6 (#4)			4209#
502P	36	4'-10	
#5	10	30'-0	
#5	10	16'-1	
#5	26	15'-8	
#5	26	10'-9	
#5	16	2'-0	
TOTAL #5			1412#
409P	50	7'-11	
410P	39	3'-11	
411P	2	8'-7	
412P	6	5'-11	
413P	13	4'-11	
415P	6	6'-6	
#4	7	30'-0	
#4	7	18'-11	
#4	11	15'-2	
#4	3	10'-4	
#4	11	10'-3	
#4	6	4'-3	
TOTAL #4			924#
TOTAL UNCOATED REINF. (#3)			6483#
TOTAL UNCOATED REINF. (#4)			6545#
CONCRETE			
POUR NO. 1 FOOTING CL. B			16.5 C.Y.
POUR NO. 2 FOOTING CL. B			11.2 C.Y.
TOTAL CL. B			27.7 C.Y.
POUR NO. 3 STEM CL. A			22.4 C.Y.
POUR NO. 4 STEM CL. A			15.7 C.Y.
POUR NO. 5 STEM & CAP CL. A PIER NO. 3			37.8 C.Y.
POUR NO. 5 STEM & CAP CL. A PIER NO. 4			37.1 C.Y.
TOTAL CL. A PIER NO. 3			75.9 C.Y.
TOTAL CL. A PIER NO. 4			75.2 C.Y.
MISCELLANEOUS			
FIELD DRILLED HOLES IN CONCRETE			24 EA.

NOTES:

1. For Notes, See Dwg. R7 .

PIER NO. 3 & NO. 4 E.B.
INDIANA DEPARTMENT OF TRANSPORTATION

SCALE: AS NOTED

DATE: 10/21 1993

Thomas S. Sharp

DRAWING: R9 OF R21 SHEET: 10 OF 37

PROJECT: IM-70-2(072)

BRIDGE CONTRACT NO. R-20970

BRIDGE FILE: I-70-51-5178C

5178EBP3/48

DESIGNED: MP 9/93 CHECKED: TS 10/93
DRAWN: MKM 9/93 CHECKED: MP 10/93
REVISED: CHECKED:

SHEET REVISED: SEPTEMBER 24, 1992

PLOT DATE & TIME: OCT 07, 1993 - 14:41:06

NOTE:

SOUTH END – PIER NO.2 W.B.
NORTH END – PIER NO.5 E.B.

NOTE:

NORTH END – PIER NO.2 W.B.
SOUTH END – PIER NO.5 E.B.

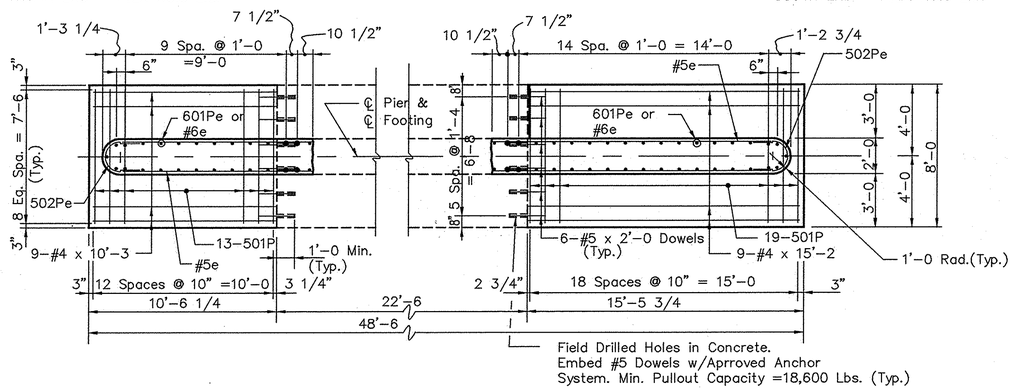

PIER NO. 2 W.B. & NO. 5 E.B.
FOOTING PLAN

Scale: 1/4" = 1'-0

NOTE:

SOUTH END – PIER NO.2 E.B.
NORTH END – PIER NO.5 W.B.

NOTE:

NORTH END – PIER NO.2 E.B.
SOUTH END – PIER NO.5 W.B.

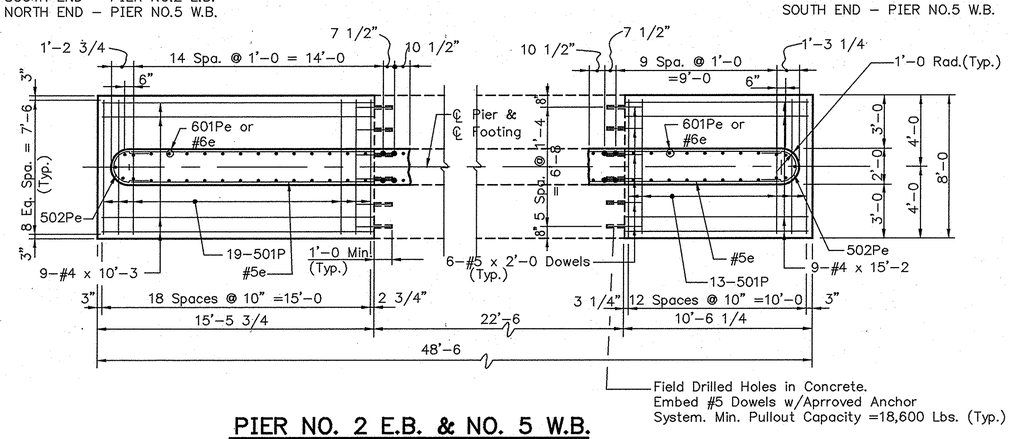

PIER NO. 2 E.B. & NO. 5 W.B.
FOOTING PLAN

Scale: 1/4" = 1'-0

NOTES:

1. For Reinforcing Bar Notes, See Br. Std. C1.
2. For General Notes, See Dwg. R1.
3. For Section thru Footing, See Dwg's. R7 & R9.

NOTE:

NORTH END

NOTE:

SOUTH END

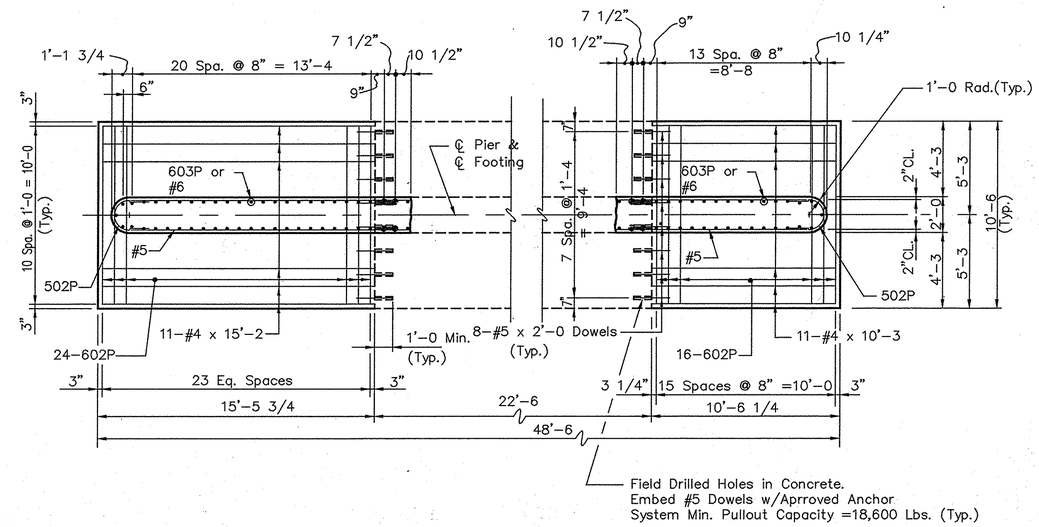

PIER NO. 3 & NO. 4 W.B.
FOOTING PLAN

Scale: 1/4" = 1'-0

NOTE:

NORTH END

NOTE:

SOUTH END

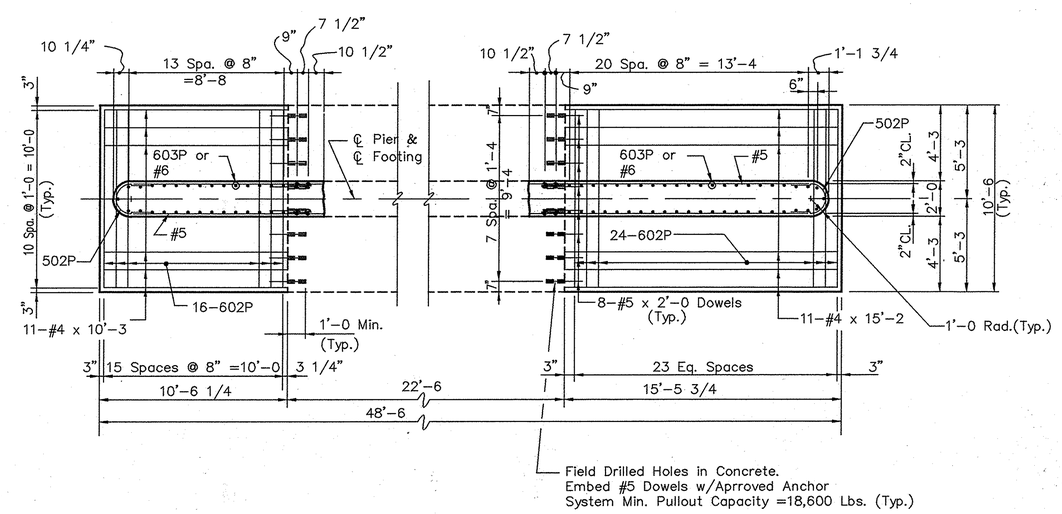

PIER NO. 3 & NO. 4 E.B.
FOOTING PLAN

Scale: 1/4" = 1'-0

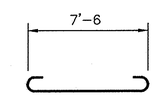

501P x 8'-8

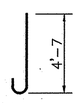

601Pe x 5'-3

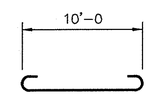

602P x 11'-4

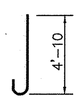

603P x 5'-6

PIER FOOTING DETAILS
INDIANA DEPARTMENT OF TRANSPORTATION

SCALE: AS NOTED

DATE: 10/21 1993

Thomas S. Sharp

DRAWING: R10 OF R21 SHEET: 11 OF 37
PROJECT: IM-70-2(072)
BRIDGE CONTRACT NO. R-20970
BRIDGE FILE: I-70-51-5178C

5178FTGP/48

DESIGNED: MP 9/93 CHECKED: TS 10/93
DRAWN: MKM 10/93 CHECKED: MP 10/93
REVISED: CHECKED:

SHEET REVISED: SEPTEMBER 24, 1992

PLOT DATE & TIME: OCT 08, 1993 – 12:01:02

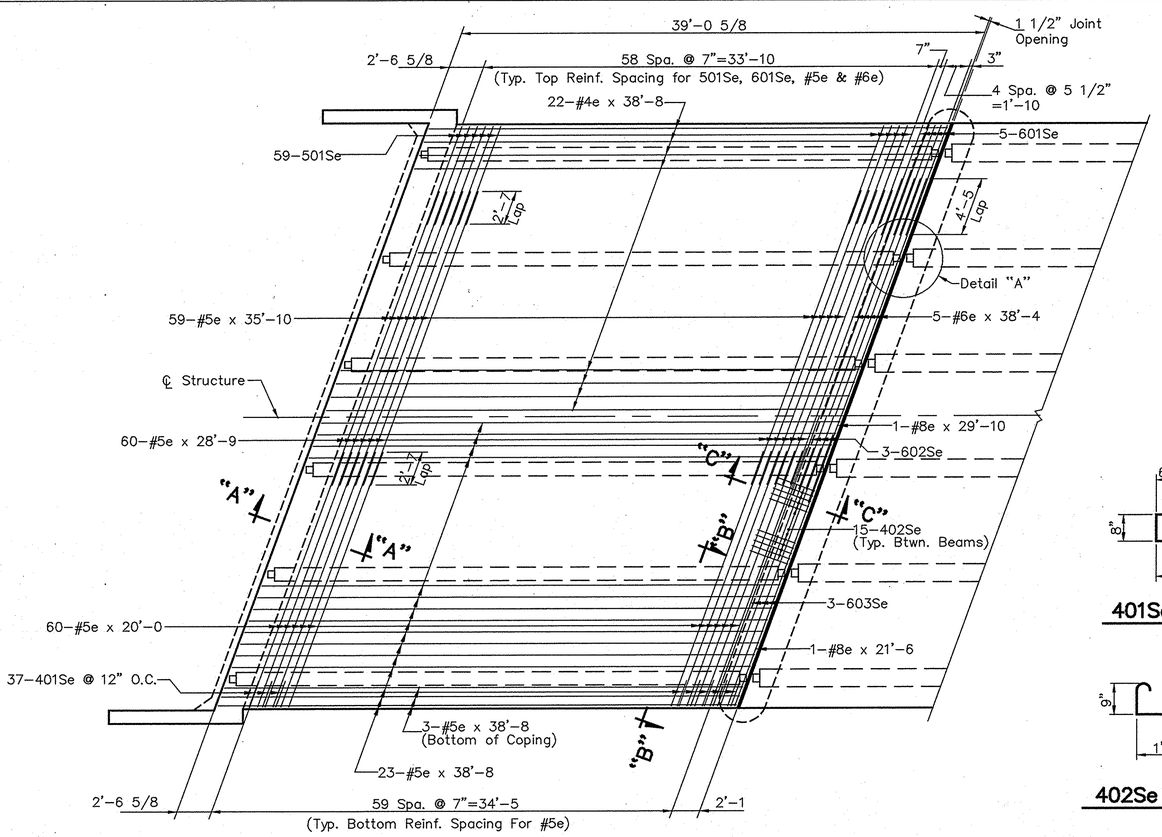

W.B. SUPERSTRUCTURE PLAN-SPAN A

(SPAN E SIMILAR)
(E.B. SUPERSTRUCTURE SIMILAR)
Scale: 3/16"=1'-0

NOTE:

Top half shows top slab reinforcing steel.
Bottom half shows bottom slab reinforcing steel.

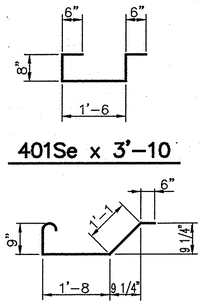

401Se x 3'-10

402Se x 4'-6

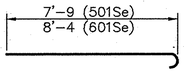

501Se x 8'-4
601Se x 9'-0

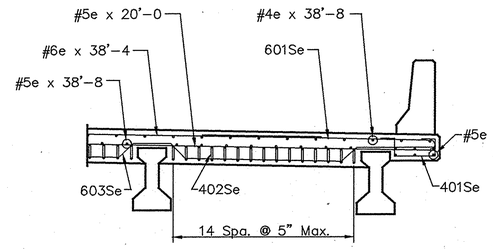

SECTION "B-B"

(SHOWING REINFORCING @ THICKENED SLAB)
Scale: 3/8"=1'-0

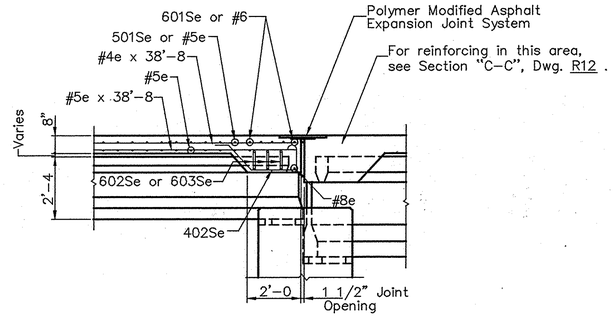

SECTION "C-C"

(SHOWING REINFORCING-SPANS A & E)
Scale: 3/8"=1'-0

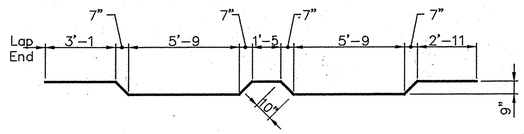

603Se x 22'-3

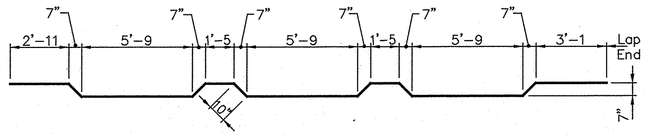

602Se x 31'-1

BILL of MATERIALS
(ONE SPAN ONLY)

SIZE or MK	NO. of BARS	LENGTH	WEIGHT
#8e	1	29'-10	
#8e	1	21'-6	
TOTAL #8e			137#
601Se	10	9'-0	
602Se	3	31'-1	
603Se	3	22'-3	
#6e	5	38'-4	
TOTAL #6e			664#
501Se	118	8'-4	
504Se	80	3'-9	
505Se	80	3'-11	
#5e	52	38'-8	
#5e	59	35'-10	
#5e	60	28'-9	
#5e	60	20'-0	
TOTAL #5e			9019#
401Se	74	3'-10	
402Se	75	4'-6	
#4e	44	38'-8	
#4e	12	19'-3	
#4e	12	18'-11	
TOTAL #4e			1858#
TOTAL EPOXY COATED REINF.			11678#
CLASS C CONCRETE			
POUR NO.1			60.2 C.Y.
TOTAL CLASS C IN SUPERSTRUCTURE			60.2 C.Y.
TOTAL CLASS C IN RAILING			7.7 C.Y.
MISCELLANEOUS			
SURFACE SEAL			2373 S.F.
BARRIER DELINEATORS			2 EA.

NOTE:
Total Length of Type I Prestressed Concrete I-Beam = 463 L.F.

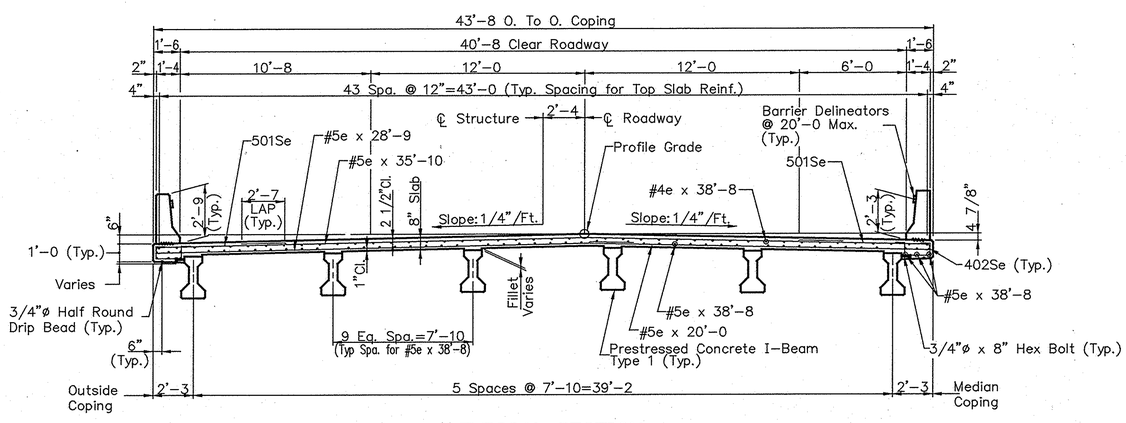

TYPICAL SECTION

Scale: 1/4"=1'-0

NOTES:

1. For reinforcing bar notes, see Br. Std. C1.
2. Concrete forms shall not be blocked against the expansion end of the beams in making any pours adjacent to the beam spans.
3. For General Notes, see Dwg. R1 .
4. The letter "e" denotes epoxy coated reinforcing.
5. Permanent metal deck forms shall not be substituted for removable forms at this structure.
6. For alternate precast deck panels, see Br. Std. C5.
7. For additional details, see Dwg's. R12, R13 & R14 .
8. For Section "A-A", see Dwg. R5 .
9. All beams shall be cast a minimum of 15 days before the deck is poured.

SUPERSTRUCTURE-SPAN A & E
INDIANA DEPARTMENT OF TRANSPORTATION

SCALE: AS NOTED DATE: 10/21 1993

Thomas S. Sharp

DRAWING: R11 OF R21 SHEET: 12 OF 37
PROJECT: IM-70-2(072)
BRIDGE CONTRACT NO. R-20970
BRIDGE FILE: I-70-51-5178C

5178SUPA/64

PLOT DATE & TIME: OCT 08, 1993 - 11:54:59

DESIGNED MP 9/93 CHECKED TS 10/93
DRAWN SKG 9/93 CHECKED MP 10/93
REVIEWED
SHEET REVISED: SEPTEMBER 24, 1992

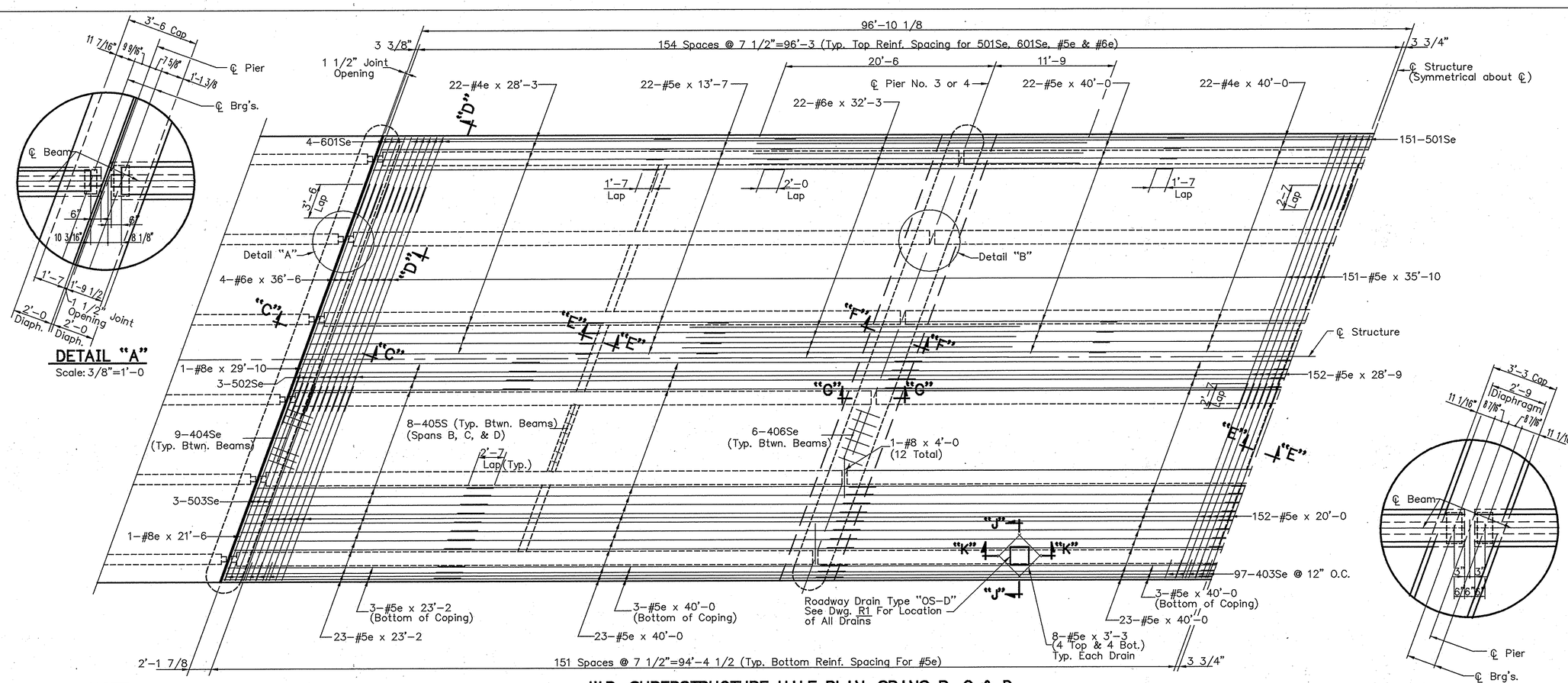

W.B. SUPERSTRUCTURE HALF PLAN-SPANS B, C & D

(E.B SUPERSTRUCTURE SIMILAR)
Scale: 3/16"=1'-0

DETAIL "A"

Scale: 3/8"=1'-0

DETAIL "B"

Scale: 3/8"=1'-0

BILL of MATERIALS

(One Superstructure Only)

SIZE or MK	NO.of BARS	LENGTH	WEIGHT
#8e	2	29'-10	
#8e	2	21'-6	
TOTAL #8e			274#
601Se	16	9'-0	
#6e	8	36'-6	
#6e	86	32'-3	
TOTAL #6e			4821#
501Se	604	8'-4	
502Se	6	31'-4	
503Se	6	22'-2	
504Se	408	3'-9	
505Se	408	3'-11	
#5e	296	40'-0	
#5e	302	35'-10	
#5e	304	28'-9	
#5e	104	23'-2	
#5e	304	20'-0	
#5e	88	13'-7	
#5e	16	3'-3	
TOTAL #5e			51754#
403Se	388	4'-1	
404Se	90	5'-8	
406Se	60	11'-3	
#4e	44	40'-0	
#4e	88	28'-3	
#4e	96	19'-8	
#4e	12	16'-7	
#4e	12	16'-3	
TOTAL #4e			6211#
TOTAL EPOXY COATED REINF.			63060#
#8	12	4'-0	
TOTAL #8			128#
#5	276	6'-0	
TOTAL #5			1727#
405S	120	7'-1	
TOTAL #4			568#
TOTAL UNCOATED REINF.			2423#
CLASS C CONCRETE			
POUR NO.2 2 @ 67.3 C.Y.			134.6 C.Y.
POUR NO.3			86.5 C.Y.
POUR NO.4 2 @ 21.6 C.Y.			43.2 C.Y.
INTERIOR DIAPHRAGMS			8.1 C.Y.
TOTAL CL. C IN SUPERSTRUCTURE			272.4 C.Y.
TOTAL CL. C IN RAILING			38.0 C.Y.
MISCELLANEOUS			
SURFACE SEAL			11692S.F.
BARRIER DELINEATORS			24 EA.
POLYMER MODIFIED ASPHALT			
EXPANSION JOINT			90.2 L.F.
2-ROADWAY DRAINS TYPE "OS-D"			644#
2-6"ø C.I. DRAIN PIPES x3'-6 (EXTRA HEAVY)			136#

NOTE:
TOTAL LENGTH OF TYPE III PRESTRESSED CONCRETE I-BEAMS = 1153.5 L.F.

NOTE:

Top half shows top slab reinforcing steel.
Bottom half shows bottom slab reinforcing steel.

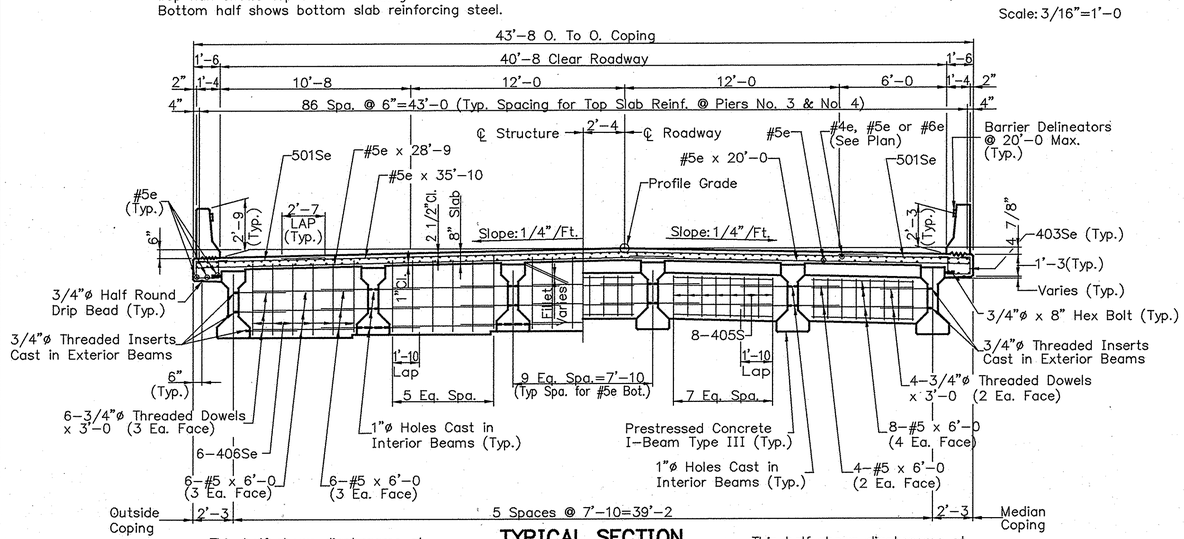

This half shows diaphragms at interior Piers No. 3 & 4

TYPICAL SECTION

Scale: 1/4"=1'-0

This half shows diaphragms at mid-spans (Spans B,C & D)

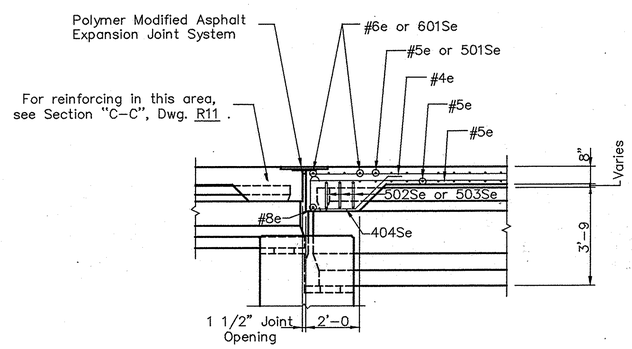

SECTION "C-C"

(SHOWING REINFORCING-SPANS B & D)
Scale: 3/8"=1'-0

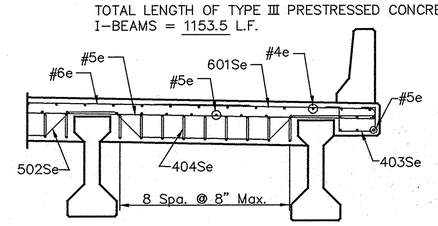

SECTION "D-D"

(SHOWING REINFORCING @ THICKENED SLAB)
Scale: 3/8"=1'-0

NOTES:

1. For additional details, sections and notes see Dwg's. R11 , R13 & R14 .

SUPERSTRUCTURE-SPAN B, C & D
INDIANA DEPARTMENT OF TRANSPORTATION

SCALE: AS NOTED DATE: 10/21 1993

Thomas S. Sharp

DRAWING: R12 OF R21 SHEET: 13 OF 37
PROJECT: IM-70-2(072)
BRIDGE CONTRACT NO. R-20970
BRIDGE FILE: I-70-51-5178C

5178SUPB/64

PLOT DATE & TIME: OCT 08, 1993 - 11:57:56

DESIGNED: MP 9/93 CHECKED: TS 10/93
DRAWN: SLG 9/93 CHECKED: MP 10/93
REVISED: CHECKED:

SHEET REVISED: SEPTEMBER 24, 1992

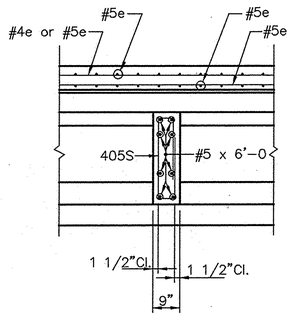

SECTION "E-E"

Scale: 1/2"=1'-0

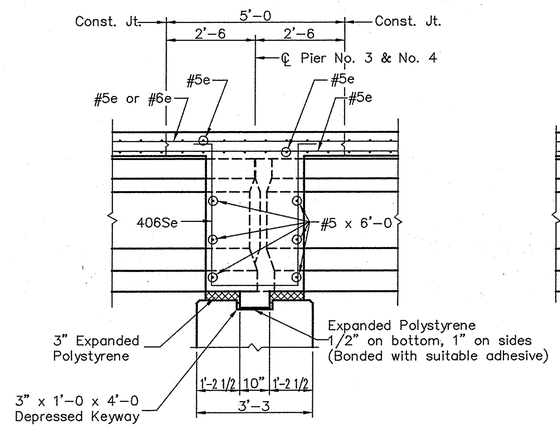

SECTION "F-F"

Scale: 1/2"=1'-0

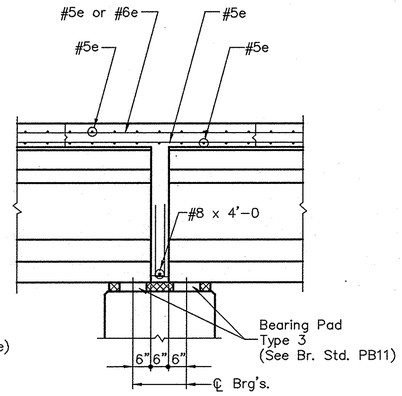

SECTION "G-G"

Scale: 1/2"=1'-0

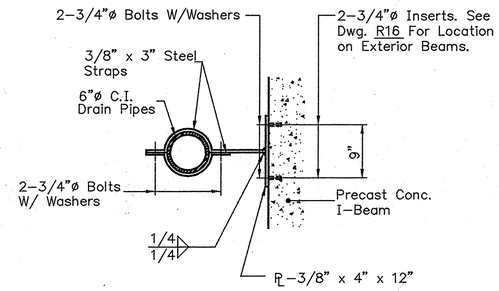

PIPE SUPPORT BRACKET DETAIL

No Scale

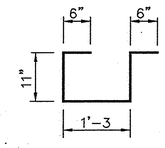

403Se x 4'-1

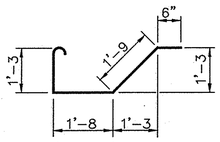

404Se x 5'-8

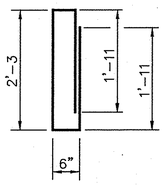

405S x 7'-1

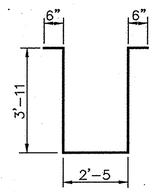

406Se x 11'-3

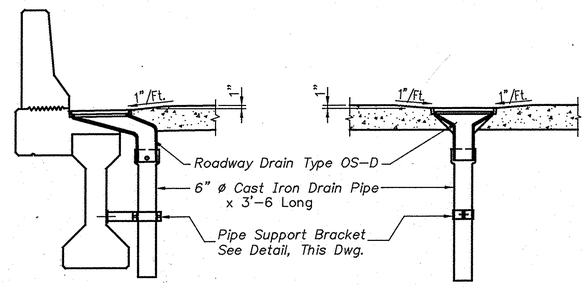

SECTION "J-J"

Scale: 1/2"=1'-0

SECTION "K-K"

Scale: 1/2"=1'-0

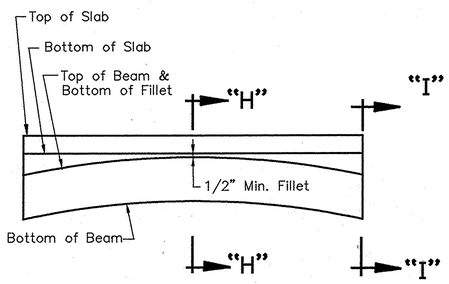

ELEVATION

No Scale

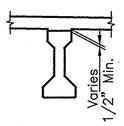

SECTION "H-H"

No Scale

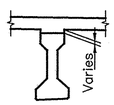

SECTION "I-I"

No Scale

NOTE:

Bridge seat elevations were calculated using design cambers and dead load deflection of slab (residual beam camber)with top of beam a minimum of 1/2 inch below bottom of slab elevation at centerline of span.

BEAM CAMBER IN INCHES					
SPAN	"A"	"B"	"C"	"D"	"E"
INITIAL	0.5763	0.3921	1.3972	0.3921	0.5763
ANTICIPATED @ ERECTION *	1.0085	0.6862	2.4451	0.6862	1.0085
DEAD LOAD	-0.3527	-0.3790	-1.3922	-0.3790	-0.3527
RESIDUAL	0.6558	0.3072	1.0529	0.3072	0.6558

* 1.75 times the initial beam camber to account for the loss of prestress and the creep effect.

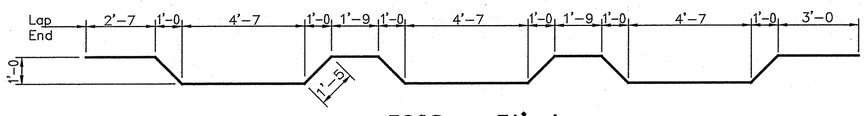

502Se x 31'-4

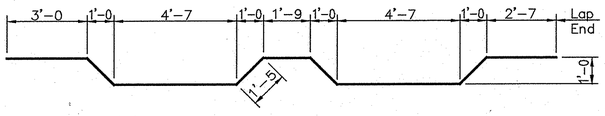

503Se x 22'-2

NOTES:

1. For notes, see Dwg. R11 .

SUPERSTRUCTURE DETAILS
INDIANA DEPARTMENT OF TRANSPORTATION

SCALE: AS NOTED

DATE: 10/21 1993

Thomas S. Sharp

DRAWING: R13 OF R21 SHEET: 14 OF 37
PROJECT: IM-70-2(072)
BRIDGE CONTRACT NO. R-20970
BRIDGE FILE: I-70-51-5178C

5178SDT1/48

THOMAS S. SHARP REGISTERED 16805 STATE OF INDIANA PROFESSIONAL ENGINEER

PLOT DATE & TIME: SEP 20, 1993 - 13:59:09

DESIGNED: MP 9/93 CHECKED: TS 10/93
DRAWN: SLG 9/93 CHECKED: MP 10/93
REVISED: CHECKED:
SHEET REVISED: SEPTEMBER 24, 1992

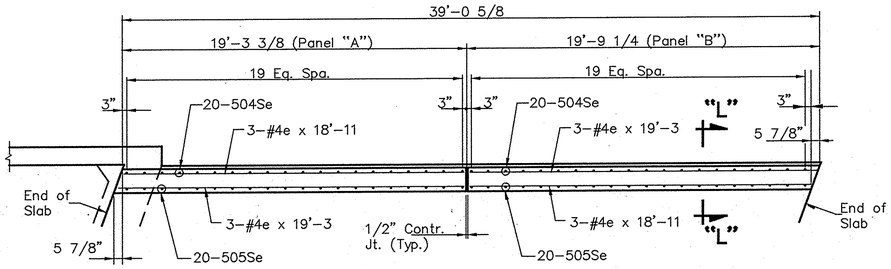

BARRIER RAILING PLAN–SPANS A & E

(SPAN "A" SHOWN)
Scale: 1/4"=1'-0

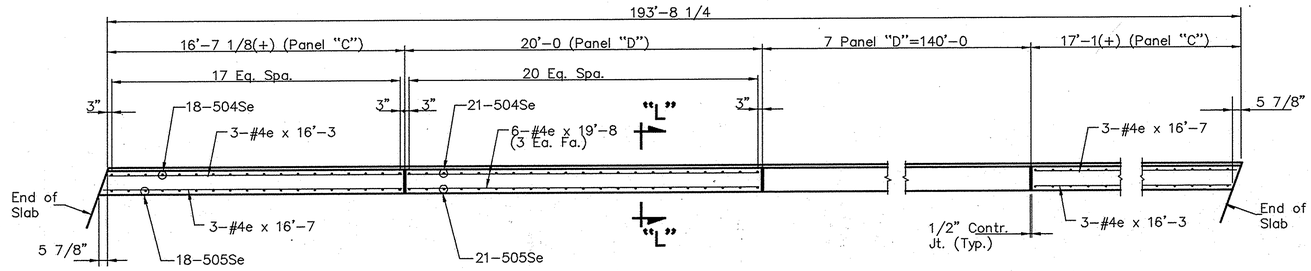

BARRIER RAILING PLAN–SPANS B, C, & D

Scale: 1/4"=1'-0

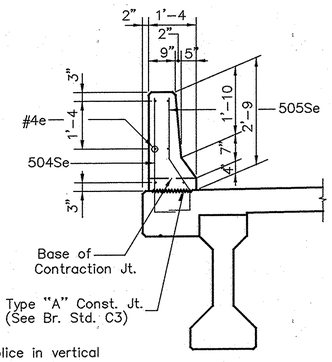

NOTE:

For optional splice in vertical railing reinforcing steel, See Br. Std. C3.

SECTION "L–L"

Scale: 1/2"=1'-0

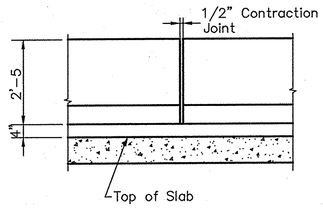

RAILING CONTRACTION JOINT DETAIL

Scale: 1/2"=1'-0

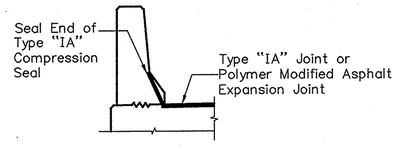

JOINT TREATMENT AT BARRIER RAIL

Scale: 1/2"=1'-0

DESIGN DATA

Live Load	Designed for HS20–44 loading with impact and distribution of loads in accordance with 1992 AASHTO Specifications. Checked for special loading of 2–24,000 Lbs. axles spaced at 4'–0 centers.
Dead Load	Actual Weight plus 20 P.S.F. for future wearing surface.
Floor Slab	Designed for 16,000# wheel load plus impact. Structural depth of 6 1/2 inches.
Allowable Stresses	To be in accordance with 1992 AASHTO specifications.
Design Strength	Class "C" concrete – f'c = 4,000 p.s.i. Class "B" concrete – f'c = 3,000 p.s.i. Class "A" concrete – f'c = 3,500 p.s.i. Reinforcing – fy = 60,000 p.s.i.
Design Method	Superstructure – Load Factor Design Method Substructures – Strength Design Method Prestressed Members: See Dwg's. R15 & R16 and Br. Std. PB1 & PB3.
Seismic Criteria	Designed in accordance with Division I–A of 1992 AASHTO Specifications using seismic performance category "A" and 0.05 acceleration coefficient.

NOTES:

1. For notes, see Dwg. R11 .

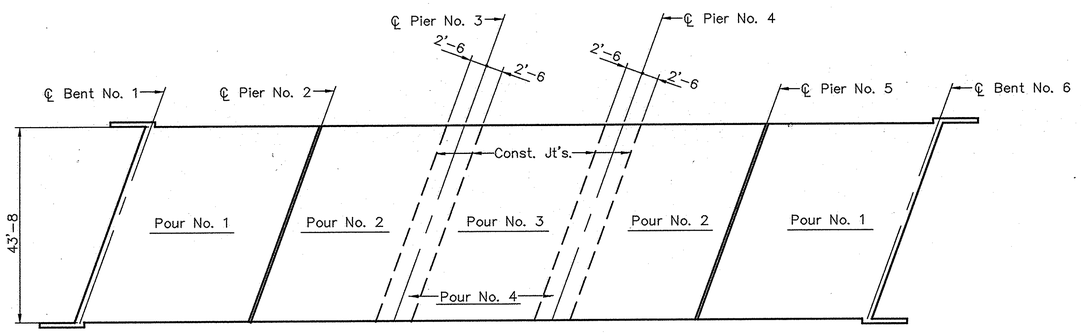

POUR SCHEDULE

No Scale

Pour numbers indicate sequence of pours. Pours over Piers No. 3 & No. 4 to be made last to reduce the effect of the slab dead load in the negative moment area. Pour No. 4 will include the diaphragm at support. Interior diaphragms to be poured before the slab is poured.

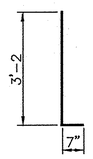

504Se x 3'–9

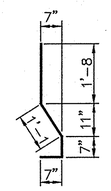

505Se x 3'–11

SUPERSTRUCTURE DETAILS
INDIANA DEPARTMENT OF TRANSPORTATION

SCALE: AS NOTED

DATE: 10/21 1993

Thomas S. Sharp

DRAWING: R14 OF R21 SHEET: 15 OF 37
PROJECT: IM–70–2(072)
BRIDGE CONTRACT NO. R-20970
BRIDGE FILE: I–70–51–5178C

THOMAS S. SHARP REGISTERED 16806 STATE OF INDIANA PROFESSIONAL ENGINEER

5178SDT2/48

PLOT DATE & TIME: SEP 20, 1993 – 13:55:41

DESIGNED: MP 8/93 CHECKED: TS 10/93
DRAWN: SLG 8/93 CHECKED: MP 10/93
REVISED: CHECKED:
SHEET REVISED: SEPTEMBER 24, 1992

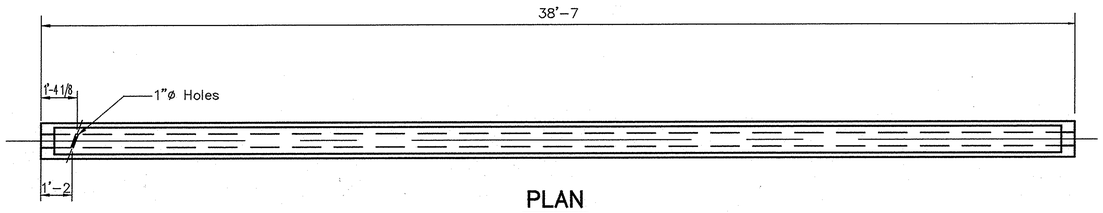

PLAN

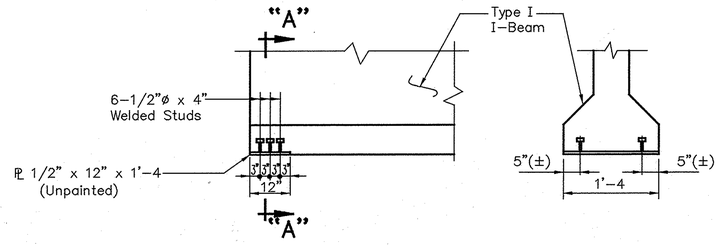

ELEVATION SECTION "A-A"

END BENT BEARING DETAIL

END BENT END

PIER END

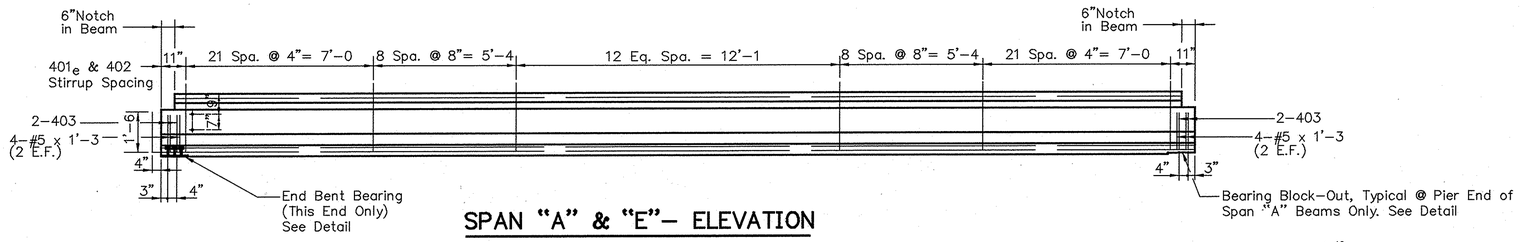

SPAN "A" & "E"- ELEVATION

NOTES:

1. All Beams Shall be Cast a Minimum of 15 Days Before the Deck is Poured.
2. See Bridge Standard Sheet C1 for Reinforcing Bar Notes.
3. See Bridge Standard Sheet PB1 for General Notes, Design Notes and Dimensions for Type I Prestressed Concrete I-Beams.
4. See Bridge Standard Sheet PB10 for Tolerances for Fabrication of Prestressed Beams.
5. See Bridge Standard Sheet PB11 for Details of Elastomeric Bearing Pads.
6. Sealer on Outside Face of Exterior Beams and on Top of all Beams to be done by the Fabricator in the Shop as shown on the Detail Plans. Do not Rub.
7. All Reinforcing Steel is to conform to A.S.T.M., A615, Grade 60.
8. The Letter "e" denotes Epoxy Coated Reinforcing.

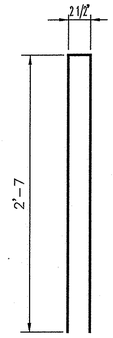

401e

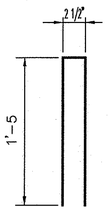

403

DESIGN DATA

Concrete Strengths: f'_c = 6,000 P.S.I.
f'_{ci} = 4,500 P.S.I.

Initial Pull per Strand = 33818#

℄ BEAM CAMBER (In.)	SPAN
	A and E
Initial Beam Camber	0.5763
*Anticipated Camber	1.0085*
Slab and Diaphragm	-0.3527
Residual Camber	0.6558

* 1.75 Times the "Initial Beam Camber" to Account for the Loss of Prestress and the Creep Effect.

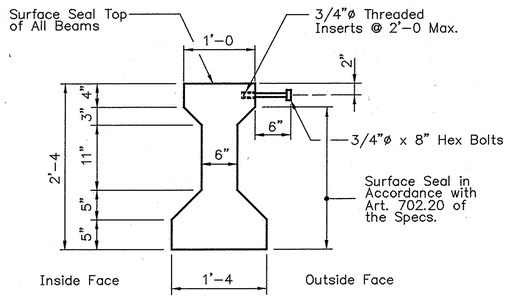

TYPICAL EXTERIOR BEAM SECTION

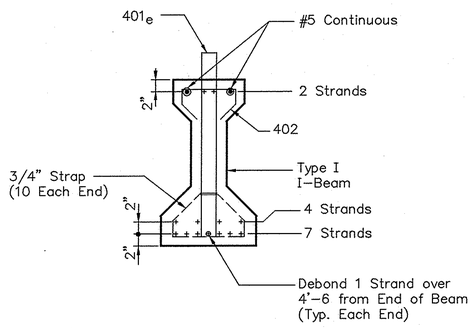

Total 13 - 1/2"ø, 7 Wire, 270k Special Lo - Lax Strands (Area = 0.167 in.^{2})

TYPICAL BEAM SECTION

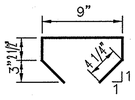

402

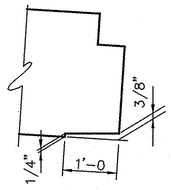

BEARING BLOCK-OUT DETAIL

BEAM DETAILS - SPAN A & E
INDIANA DEPARTMENT OF TRANSPORTATION

SCALE: NONE

DATE: 10/21 1993

Thomas S. Sharp

DRAWING: R15 OF R21 SHEET: 16 OF 37
PROJECT: IM-70-2(072)
BRIDGE CONTRACT NO. R-20970
BRIDGE FILE: I-70-51-5178C

THOMAS S. SHARP REGISTERED 16806 STATE OF INDIANA PROFESSIONAL ENGINEER

5178AEBM/32

DESIGNED: MP 9/93 CHECKED: TS 10/93
DRAWN: MKM 9/93 CHECKED: MP 10/93
REVISED: CHECKED:
SHEET REVISED: SEPTEMBER 24, 1992
PLOT DATE & TIME: OCT 13, 1993 - 13:24:46

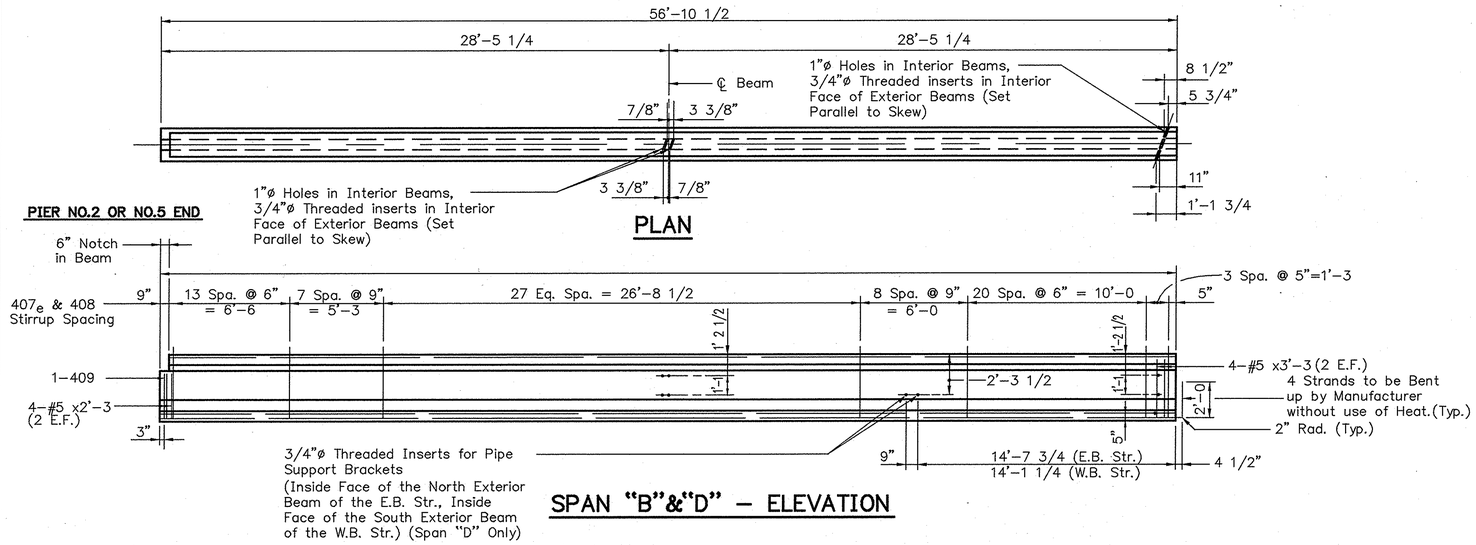

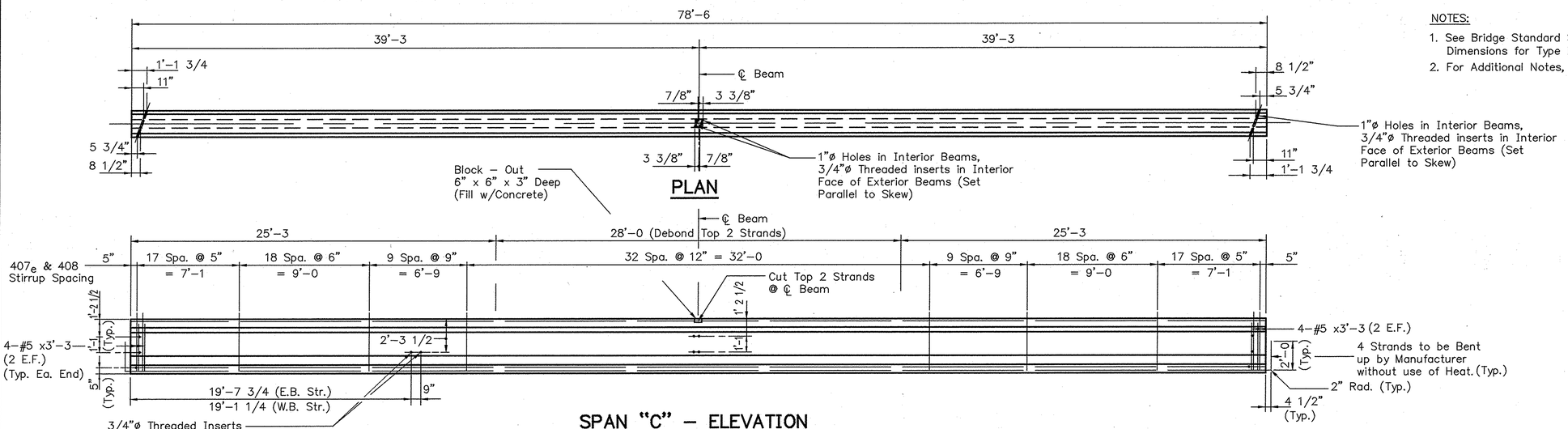

DESIGN DATA

Concrete Strengths: f'_c = 5,000 P.S.I.
f'_{ci} = 4,000 P.S.I.

Initial Pull per Strand = 33818#

℄ BEAM CAMBER (In.)	SPAN	
	B and D	C
Initial Beam Camber	0.3921	1.3972
*Anticipated Camber	0.6862 *	2.4451 *
Slab and Diaphragm	−0.3790	−1.3922
Residual Camber	0.3072	1.0529

* 1.75 Times the "Initial Beam Camber" to Account for the Loss of Prestress and the Creep Effect.

NOTES:

1. See Bridge Standard Sheet PB3 for General Notes, Design Notes and Dimensions for Type III Prestressed Concrete I–Beams.
2. For Additional Notes, See Dwg. R15.

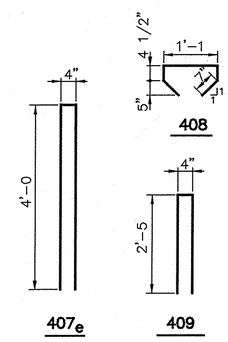

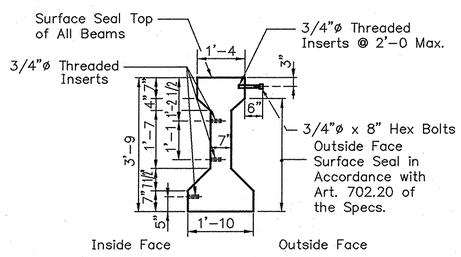

TYPICAL EXTERIOR BEAM SECTION

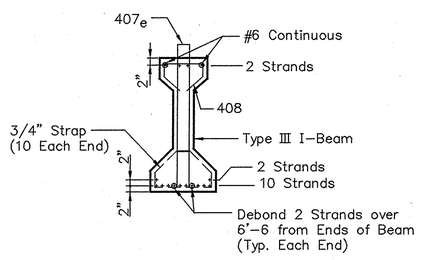

Total 14 – 1/2"ø, 7 Wire, 270k Special Lo – Lax Strands (Area 0.167 in 2)

TYPICAL BEAM SECTION
SPAN "B" & "D"

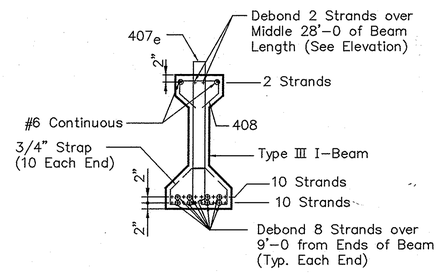

Total 22 – 1/2"ø, 7 Wire, 270k Special Lo – Lax Strands (Area 0.167 in 2)

TYPICAL BEAM SECTION
SPAN "C"

BEAM DETAILS–SPAN B, C & D
INDIANA DEPARTMENT OF TRANSPORTATION

SCALE: NONE

DATE: 10/21 1993

Thomas S. Sharp

DRAWING: R16 OF R21 SHEET: 17 OF 37
PROJECT: IM–70–2(072)
BRIDGE CONTRACT NO. R-20970
BRIDGE FILE: I–70–51–5178C

THOMAS S. SHARP REGISTERED 16806 STATE OF INDIANA PROFESSIONAL ENGINEER

5178CDBM/48

PLOT DATE & TIME: OCT 08, 1993 – 12:00:01

DESIGNED: MP 9/93 CHECKED: TS 10/93
DRAWN: MKM 9/93 CHECKED: MP 10/93
REVISED: CHECKED:
SHEET REVISED: SEPTEMBER 24, 1992

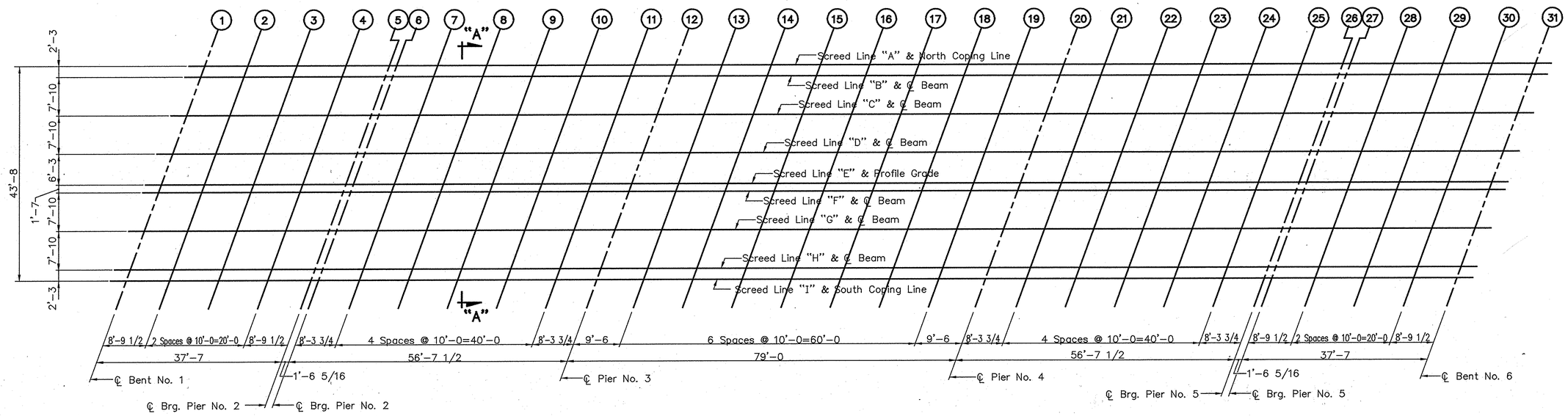

W.B SCREED PLAN

Scale: 3/32"=1'-0

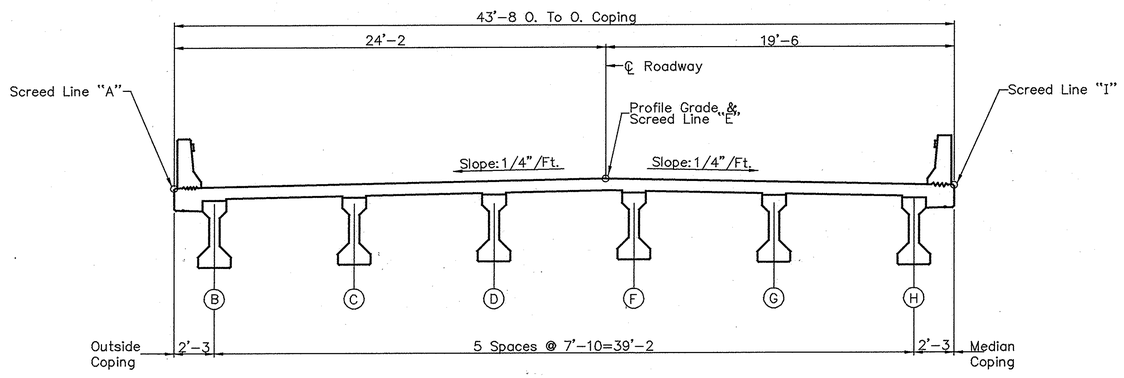

SECTION "A-A"

Scale: 1/4"=1'-0

NOTES:

1. "Screed Plan" shows location of screeds.
2. "Screed Elevations" Table, Dwg. R18 , shows data for setting screed and coping forms so that the slab and coping will be at final grade elevation after all concrete has been poured.
3. See Dwg. R1 for general notes.
4. See Dwg's. R11 , R12 , R13 , & R14 for additional notes and details.

GENERAL PROCEDURE

1. Take elevations at all screed points on top of the adjacent beam, enter these elevations in the "Screed Elevation" Table, Dwg. R18 . Subtract these elevations from the tabulated elevations and use the resulting dimension as the height for setting the screed or coping forms above that point. This dimension remains constant regardless of how much or in what order the concrete is poured. Do not set screed or coping forms by leveling.
2. No concrete in the deck is to be poured until the above operation is completed.
3. Screed elevation points are parallel to skew.

W.B. SCREED DATA
INDIANA DEPARTMENT OF TRANSPORTATION

SCALE: AS NOTED

DATE: 10/21 1993

Thomas S. Sharp

DRAWING: R17 OF R21 SHEET: 18 OF 37
PROJECT: IM-70-2(072)
BRIDGE CONTRACT NO. R-20970
BRIDGE FILE: I-70-51-5178C

THOMAS S. SHARP REGISTERED 10906 STATE OF INDIANA PROFESSIONAL ENGINEER

5178WSC1/128

PLOT DATE & TIME: JAN 01, 1992

DESIGNED: MP 9/93 CHECKED: TS 10/93
DRAWN: SLG 9/93 CHECKED: MP 10/93
REVIEWED: CHECKED:
SHEET REVISED: SEPTEMBER 24, 1992

SCREED ELEVATIONS

POINT		1	2	3	4	5	6	7	8	9	10	11	12	13	14	15	16	17	18	19	20	21	22	23	24	25
A	ELEVATION–TOP OF SCREED	758.800	758.795	758.775	758.740	758.695	758.690	758.680	758.665	758.645	758.610	758.570	758.530	758.550	758.565	758.565	758.545	758.510	758.450	758.385	758.310	758.300	758.285	758.265	758.230	758.190
	ELEVATION–TOP OF BEAM																									
	DISTANCE–TOP OF BEAM TO TOP OF SCREED																									
B	ELEVATION–TOP OF SCREED	758.845	758.845	758.825	758.790	758.745	758.740	758.730	758.715	758.695	758.660	758.620	758.580	758.600	758.615	758.615	758.595	758.555	758.500	758.430	758.360	758.350	758.335	758.315	758.280	758.240
	ELEVATION–TOP OF BEAM																									
	DISTANCE–TOP OF BEAM TO TOP OF SCREED																									
C	ELEVATION–TOP OF SCREED	759.020	759.015	758.995	758.960	758.915	758.910	758.900	758.885	758.860	758.830	758.790	758.750	758.770	758.780	758.775	758.760	758.720	758.665	758.600	758.530	758.520	758.505	758.480	758.450	758.410
	ELEVATION–TOP OF BEAM																									
	DISTANCE–TOP OF BEAM TO TOP OF SCREED																									
D	ELEVATION–TOP OF SCREED	759.190	759.185	759.170	759.130	759.085	759.080	759.070	759.055	759.035	759.000	758.960	758.925	758.940	758.950	758.950	758.930	758.890	758.840	758.770	758.700	758.690	758.675	758.655	758.620	758.580
	ELEVATION–TOP OF BEAM																									
	DISTANCE–TOP OF BEAM TO TOP OF SCREED																									
E	ELEVATION–TOP OF SCREED	759.325	759.320	759.305	759.265	759.225	759.220	759.210	759.195	759.170	759.135	759.095	759.060	759.075	759.085	759.085	759.065	759.030	758.975	758.910	758.840	758.830	758.815	758.790	758.760	758.715
	ELEVATION–TOP OF BEAM																									
	DISTANCE–TOP OF BEAM TO TOP OF SCREED																									
F	ELEVATION–TOP OF SCREED	759.295	759.290	759.275	759.235	759.190	759.185	759.175	759.160	759.140	759.105	759.065	759.030	759.045	759.055	759.055	759.035	758.995	758.945	758.875	758.810	758.800	758.780	758.760	758.725	758.685
	ELEVATION–TOP OF BEAM																									
	DISTANCE–TOP OF BEAM TO TOP OF SCREED																									
G	ELEVATION–TOP OF SCREED	759.140	759.135	759.120	759.080	759.035	759.030	759.020	759.005	758.985	758.950	758.910	758.875	758.890	758.900	758.900	758.880	758.840	758.790	758.720	758.650	758.640	758.625	758.605	758.570	758.530
	ELEVATION–TOP OF BEAM																									
	DISTANCE–TOP OF BEAM TO TOP OF SCREED																									
H	ELEVATION–TOP OF SCREED	758.985	758.980	758.960	758.925	758.880	758.875	758.870	758.855	758.830	758.795	758.755	758.720	758.740	758.750	758.750	758.730	758.695	758.640	758.570	758.495	758.490	758.475	758.450	758.420	758.375
	ELEVATION–TOP OF BEAM																									
	DISTANCE–TOP OF BEAM TO TOP OF SCREED																									
I	ELEVATION–TOP OF SCREED	758.940	758.935	758.920	758.880	758.835	758.830	758.825	758.810	758.785	758.755	758.710	758.675	758.695	758.705	758.705	758.685	758.650	758.595	758.525	758.455	758.445	758.430	758.405	758.375	758.330
	ELEVATION–TOP OF BEAM																									
	DISTANCE–TOP OF BEAM TO TOP OF SCREED																									

SCREED ELEVATIONS

POINT		26	27	28	29	30	31
A	ELEVATION–TOP OF SCREED	758.150	758.150	758.145	758.125	758.085	758.040
	ELEVATION–TOP OF BEAM						
	DISTANCE–TOP OF BEAM TO TOP OF SCREED						
B	ELEVATION–TOP OF SCREED	758.200	758.195	758.190	758.175	758.135	758.090
	ELEVATION–TOP OF BEAM						
	DISTANCE–TOP OF BEAM TO TOP OF SCREED						
C	ELEVATION–TOP OF SCREED	758.370	758.370	758.365	758.345	758.305	758.260
	ELEVATION–TOP OF BEAM						
	DISTANCE–TOP OF BEAM TO TOP OF SCREED						
D	ELEVATION–TOP OF SCREED	758.545	758.540	758.535	758.515	758.480	758.430
	ELEVATION–TOP OF BEAM						
	DISTANCE–TOP OF BEAM TO TOP OF SCREED						
E	ELEVATION–TOP OF SCREED	758.680	758.675	758.670	758.655	758.615	758.570
	ELEVATION–TOP OF BEAM						
	DISTANCE–TOP OF BEAM TO TOP OF SCREED						
F	ELEVATION–TOP OF SCREED	758.650	758.645	758.640	758.620	758.585	758.535
	ELEVATION–TOP OF BEAM						
	DISTANCE–TOP OF BEAM TO TOP OF SCREED						
G	ELEVATION–TOP OF SCREED	758.495	758.490	758.485	758.465	758.430	758.380
	ELEVATION–TOP OF BEAM						
	DISTANCE–TOP OF BEAM TO TOP OF SCREED						
H	ELEVATION–TOP OF SCREED	758.340	758.335	758.330	758.310	758.270	758.225
	ELEVATION–TOP OF BEAM						
	DISTANCE–TOP OF BEAM TO TOP OF SCREED						
I	ELEVATION–TOP OF SCREED	758.295	758.290	758.285	758.265	758.225	758.180
	ELEVATION–TOP OF BEAM						
	DISTANCE–TOP OF BEAM TO TOP OF SCREED						

PLOT DATE & TIME: JAN 01, 1992

DESIGNED: MP 9/93 CHECKED: TS 10/93
DRAWN: SLG 9/93 CHECKED: MP 10/93
REVISED: CHECKED:

SHEET REVISED: APRIL 1, 1993

W.B. SCREED DATA
INDIANA DEPARTMENT OF TRANSPORTATION

SCALE: AS NOTED

DATE: 10/21 1993

Thomas S. Sharp

THOMAS S. SHARP REGISTERED 16806 STATE OF INDIANA PROFESSIONAL ENGINEER

DRAWING: R18 OF R21 SHEET: 19 OF 37
PROJECT: IM-70-2(072)
BRIDGE CONTRACT NO. R-20970
BRIDGE FILE: I-70-51-5178C

5178WSC2/48

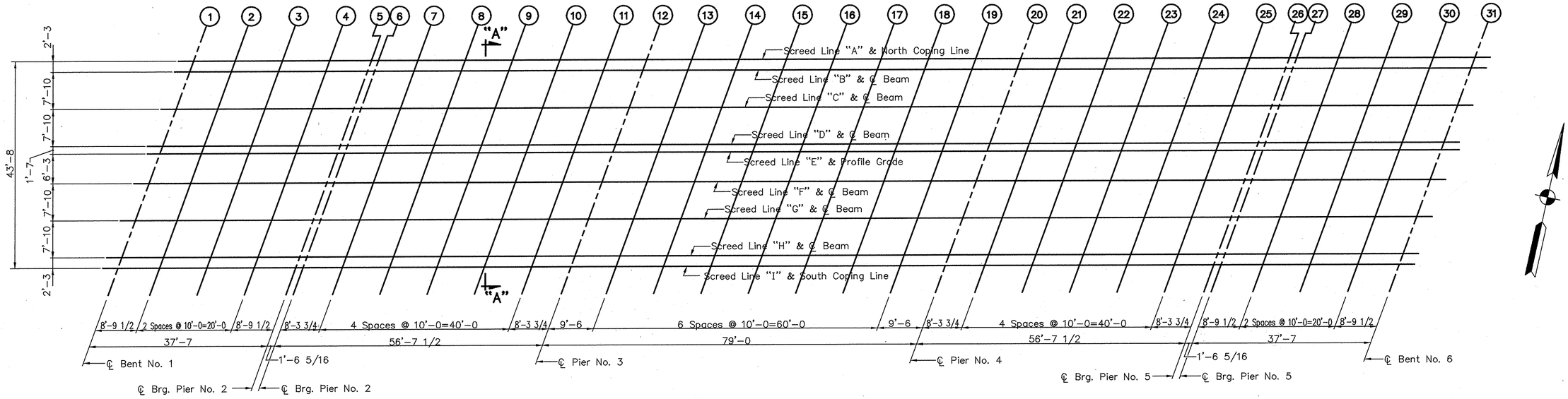

E.B. SCREED PLAN

Scale: 3/32"=1'-0

NOTES:

1. "Screed Plan" shows location of screeds.
2. "Screed Elevations" Table, Dwg. R20 , shows data for setting screed and coping forms so that the slab and coping will be at final grade elevation after all concrete has been poured.
3. See Dwg. R1 for general notes.
4. See Dwg's. R11 , R12 , R13 , & R14 for additional notes and details.

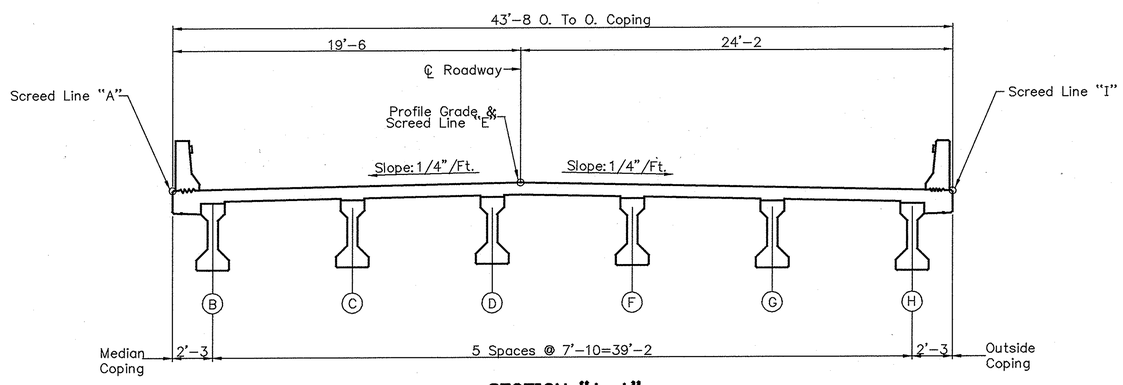

SECTION "A-A"

Scale: 1/4"=1'-0

GENERAL PROCEDURE

1. Take elevations at all screed points on top of the adjacent beam, enter these elevations in the "Screed Elevation" Table, Dwg. R20 . Subtract these elevations from the tabulated elevations and use the resulting dimension as the height for setting the screed or coping forms above that point. This dimension remains constant regardless of how much or in what order the concrete is poured. Do not set screed or coping forms by leveling.
2. No concrete in the deck is to be poured until the above operation is completed.
3. Screed elevation points are parallel to skew.

E.B. SCREED DATA
INDIANA DEPARTMENT OF TRANSPORTATION

SCALE: AS NOTED

DATE: 10/21 1993

Thomas S. Sharp

THOMAS S. SHARP REGISTERED 16806 STATE OF INDIANA PROFESSIONAL ENGINEER

DRAWING: R19 OF R21 SHEET: 20 OF 37
PROJECT: IM-70-2(072)
BRIDGE CONTRACT NO. R-20970
BRIDGE FILE: I-70-51-5178C

5178ESC1/128

DESIGNED: MP 9/93 CHECKED: TS 10/93
DRAWN: SLG 9/93 CHECKED: MP 10/93
REVISED: CHECKED:

SHEET REVISED: SEPTEMBER 24, 1992

PLOT DATE & TIME: SEP 21, 1993 - 09:32:30

SCREED ELEVATIONS

POINT		1	2	3	4	5	6	7	8	9	10	11	12	13	14	15	16	17	18	19	20	21	22	23	24	25
A	ELEVATION–TOP OF SCREED	758.985	758.980	758.965	758.925	758.880	758.880	758.870	758.855	758.830	758.800	758.755	758.720	758.740	758.750	758.750	758.735	758.695	758.640	758.570	758.500	758.490	758.475	758.450	758.420	758.375
	ELEVATION–TOP OF BEAM																									
	DISTANCE–TOP OF BEAM TO TOP OF SCREED																									
B	ELEVATION–TOP OF SCREED	759.035	759.030	759.015	758.975	758.930	758.925	758.920	758.905	758.880	758.850	758.805	758.770	758.790	758.800	758.800	758.780	758.745	758.690	758.620	758.550	758.540	758.525	758.500	758.470	758.425
	ELEVATION–TOP OF BEAM																									
	DISTANCE–TOP OF BEAM TO TOP OF SCREED																									
C	ELEVATION–TOP OF SCREED	759.205	759.200	759.185	759.145	759.100	759.100	759.090	759.075	759.050	759.015	758.975	758.940	758.955	758.965	758.965	758.945	758.910	758.855	758.790	758.720	758.710	758.695	758.670	758.640	758.595
	ELEVATION–TOP OF BEAM																									
	DISTANCE–TOP OF BEAM TO TOP OF SCREED																									
D	ELEVATION–TOP OF SCREED	759.375	759.375	759.355	759.320	759.275	759.270	759.260	759.245	759.220	759.190	759.150	759.110	759.130	759.140	759.135	759.115	759.080	759.025	758.960	758.890	758.880	758.865	758.840	758.810	758.770
	ELEVATION–TOP OF BEAM																									
	DISTANCE–TOP OF BEAM TO TOP OF SCREED																									
E	ELEVATION–TOP OF SCREED	759.410	759.410	759.390	759.355	759.310	759.305	759.295	759.280	759.255	759.225	759.180	759.145	759.160	759.170	759.170	759.150	759.115	759.060	758.995	758.925	758.915	758.900	758.875	758.845	758.805
	ELEVATION–TOP OF BEAM																									
	DISTANCE–TOP OF BEAM TO TOP OF SCREED																									
F	ELEVATION–TOP OF SCREED	759.290	759.285	759.265	759.230	759.185	759.180	759.170	759.155	759.130	759.100	759.060	759.020	759.040	759.050	759.045	759.025	758.990	758.935	758.870	758.800	758.790	758.775	758.750	758.720	758.680
	ELEVATION–TOP OF BEAM																									
	DISTANCE–TOP OF BEAM TO TOP OF SCREED																									
G	ELEVATION–TOP OF SCREED	759.130	759.130	759.110	759.075	759.030	759.025	759.015	759.000	758.975	758.945	758.905	758.865	758.885	758.895	758.890	758.870	758.835	758.780	758.715	758.645	758.635	758.620	758.595	758.565	758.525
	ELEVATION–TOP OF BEAM																									
	DISTANCE–TOP OF BEAM TO TOP OF SCREED																									
H	ELEVATION–TOP OF SCREED	758.975	758.975	758.955	758.920	758.875	758.870	758.860	758.845	758.825	758.790	758.750	758.710	758.730	758.745	758.745	758.725	758.685	758.630	758.565	758.490	758.480	758.465	758.445	758.410	758.370
	ELEVATION–TOP OF BEAM																									
	DISTANCE–TOP OF BEAM TO TOP OF SCREED																									
I	ELEVATION–TOP OF SCREED	758.935	758.930	758.910	758.875	758.830	758.825	758.815	758.800	758.780	758.745	758.705	758.665	758.685	758.700	758.700	758.680	758.645	758.585	758.520	758.445	758.435	758.420	758.400	758.365	758.325
	ELEVATION–TOP OF BEAM																									
	DISTANCE–TOP OF BEAM TO TOP OF SCREED																									

SCREED ELEVATIONS

POINT		26	27	28	29	30	31
A	ELEVATION–TOP OF SCREED	758.340	758.335	758.330	758.310	758.275	758.230
	ELEVATION–TOP OF BEAM						
	DISTANCE–TOP OF BEAM TO TOP OF SCREED						
B	ELEVATION–TOP OF SCREED	758.390	758.385	758.380	758.360	758.320	758.275
	ELEVATION–TOP OF BEAM						
	DISTANCE–TOP OF BEAM TO TOP OF SCREED						
C	ELEVATION–TOP OF SCREED	758.560	758.555	758.550	758.530	758.495	758.450
	ELEVATION–TOP OF BEAM						
	DISTANCE–TOP OF BEAM TO TOP OF SCREED						
D	ELEVATION–TOP OF SCREED	758.730	758.725	758.720	758.705	758.665	758.620
	ELEVATION–TOP OF BEAM						
	DISTANCE–TOP OF BEAM TO TOP OF SCREED						
E	ELEVATION–TOP OF SCREED	758.765	758.760	758.755	758.740	758.700	758.655
	ELEVATION–TOP OF BEAM						
	DISTANCE–TOP OF BEAM TO TOP OF SCREED						
F	ELEVATION–TOP OF SCREED	758.640	758.640	758.635	758.615	758.575	758.530
	ELEVATION–TOP OF BEAM						
	DISTANCE–TOP OF BEAM TO TOP OF SCREED						
G	ELEVATION–TOP OF SCREED	758.485	758.480	758.480	758.460	758.420	758.375
	ELEVATION–TOP OF BEAM						
	DISTANCE–TOP OF BEAM TO TOP OF SCREED						
H	ELEVATION–TOP OF SCREED	758.330	758.325	758.320	758.305	758.265	758.220
	ELEVATION–TOP OF BEAM						
	DISTANCE–TOP OF BEAM TO TOP OF SCREED						
I	ELEVATION–TOP OF SCREED	758.285	758.280	758.280	758.260	758.220	758.175
	ELEVATION–TOP OF BEAM						
	DISTANCE–TOP OF BEAM TO TOP OF SCREED						

PLOT DATE & TIME: JAN 01, 1992

DESIGNED: MP 9/93 CHECKED: TS 10/93
DRAWN: SLG 9/93 CHECKED: MP 10/93
REVISED: CHECKED:

SHEET REVISED: APRIL 1, 1993

E.B. SCREED DATA
INDIANA DEPARTMENT OF TRANSPORTATION

SCALE: AS NOTED DATE: 10/21 1993

Thomas S. Sharp

THOMAS S. SHARP REGISTERED 16806 STATE OF INDIANA PROFESSIONAL ENGINEER

DRAWING: R20 OF R21 SHEET: 21 OF 37
PROJECT: IM–70–2(072)
BRIDGE CONTRACT NO. R-20970
BRIDGE FILE: I–70–51–5178C

5178ESC2/48

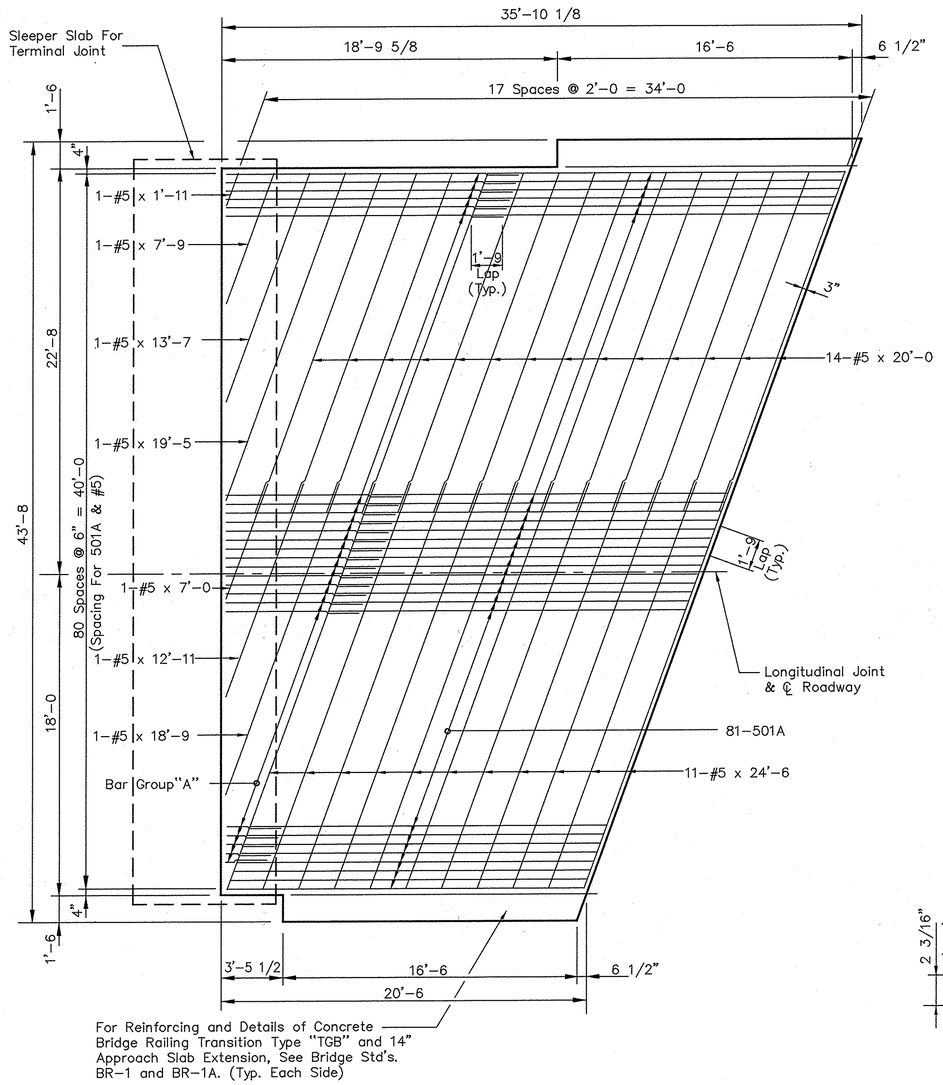

WEST APPROACH SLAB PLAN (W.B. STRUCTURE)

(OTHER SLABS SIMILAR)

Scale: 1/4"=1'-0

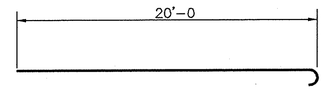

501A x 20'-7

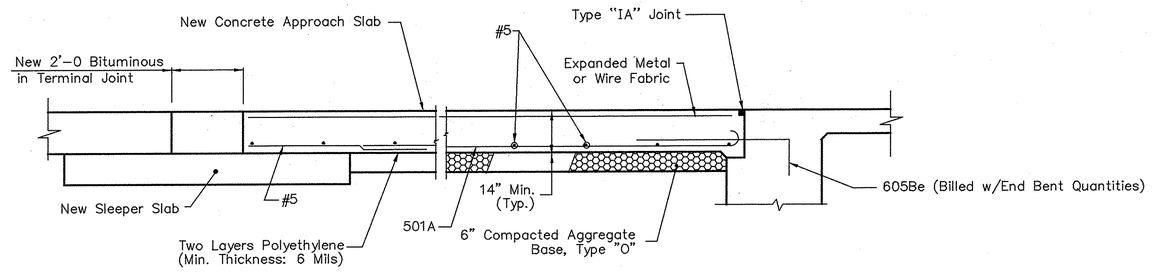

LONGITUDINAL SECTION SHOWING RECONSTRUCTION

Scale: 1/2"=1'-0

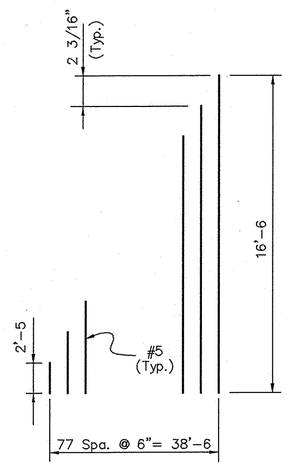

Bar Group "A"

Total Length = 737'-9

BILL of MATERIALS

(ONE SLAB ONLY)

SIZE or MK	NO.of BARS	LENGTH	WEIGHT
582_e*	84	6'-7	
583_e*	10	16'-7	
TOTAL $\#5_e$			750#
TOTAL EPOXY COATED REINF.			750#
501A	81	20'-7	
#5	1	737'-9	BAR GROUP "A"
#5	11	24'-6	
#5	14	20'-0	
#5	1	19'-5	
#5	1	18'-9	
#5	1	13'-7	
#5	1	12'-11	
#5	1	7'-9	
#5	1	7'-0	
#5	1	1'-11	
TOTAL #5			3167#
TOTAL UNCOATED REINF.			3167#
MISCELLANEOUS			
REMOVAL OF CONC. PAVEMENT			83.1 SYS.
CEMENT CONCRETE PAVEMENT, REINF., 14"			131.7SYS.
TERMINAL JOINT			40.7 LFT.
COMPACTED AGGREGATE,BASE, TYPE "O", #53			40 TON
CONCRETE BRIDGE RAILING TRANSITION TYPE "TGB"			2 EA.

* See Br. Std. BR-1A For Bar Details

NOTES:

1. The letter "e" denotes epoxy coated reinforcing.
2. For reinforcing bar notes, see Bridge Standard C-1.
3. See Road Standard Sheet "A" Joints for wire mesh and longitudinal joint details.
4. See Road Standard Sheet "B" Joints for terminal joint details.
5. Cross slope of R.C. Approach Slab to match bridge typical section, see Dwg. R2.
6. For General Notes and Standards Table, See Dwg. R1.
7. Reinforcing Steel Cover to be 3".
8. Provide Preformed Joint Filler Material Between Wingwalls and Edge of Approach Slabs.

R.C. BRIDGE APPROACH SLAB DETAILS
INDIANA DEPARTMENT OF TRANSPORTATION

SCALE: **As Noted** DATE: 10/21 1993

Thomas S. Sharp

THOMAS S. SHARP REGISTERED 16806 STATE OF INDIANA PROFESSIONAL ENGINEER

DRAWING: R21 OF R21 SHEET: 22 OF 37
PROJECT: IM-70-2(072)
BRIDGE CONTRACT NO. R-20970
BRIDGE FILE: I-70-51-5178C

5178APRS/48

DESIGNED: CHECKED:
DRAWN: MKM 9/93 CHECKED: LS 10/93
REVISED: CHECKED:
SHEET REVISED: SEPTEMBER 24, 1992

PLOT DATE & TIME: OCT 14, 1993 - 08:46:17

BRIDGE FILE

STRUCTURE QUANTITIES

ITEM	CONCRETE CLASS C SUPERSTR CU. YDS.	CONCRETE CLASS A SUBSTR CU. YDS.	CONCRETE CLASS C SUBSTR CU. YDS.	CONCRETE CLASS B IN FTG CU. YDS.	BRIDGE RAILING TRANSITION TYPE TGB EACH	FIELD DRILLED HOLES IN CONCRETE EACH	CONCRETE RAILING CLASS C CU. YDS.	TERMINAL JOINT LIN. FT.	REINF. STEEL TOTAL LBS.	REMOVAL OF CONCRETE PAVEMENT SQ. YDS.	EPOXY COATED STEEL LBS.	REVETMENT RIPRAP TONS	SOD SQ. YDS.	6"ø F.B.C.P.C.S. PIPE LIN. FT.	PILES STEEL EN-CASED CONC. NO.	PILES STEEL EN-CASED CONC. LIN. FT.	GEOTEXTILES SQ. YDS.	CAST IRON DRAIN PIPE LBS.	CAST IRON GRATES, BASINS & FITTINGS LBS.	BORROW CU YDS.	"B" BORROW FOR STRUCTURE BACKFILL CU. YDS.	POLYMER MODIFIED ASPHALT EXP. JT. LIN. FT.	CONC. STR. MEMBERS I BEAMS TYPE I LIN. FT.	CONC. STR. MEMBERS I-BEAMS TYPE III LIN. FT.	BARRIER DELINEATOR EACH	FOUNDATION EXCAVATION UNCLASSIFIED CU. YDS.	SURFACE SEAL * SQ. FT.	COMMON EXCAVATION CU. YDS.	COMPACTED AGGREGATE BASE, TYPE "O" #53 TONS	CONC. PVM'T. REINF. 14" SQ. YDS.	RAISED PAVEMENT MARKERS EACH
W.B. STRUCTURE																															
SUBSTRUCTURES																															
BENT NO. 1			12.2								5030				1	35				30	17							9			
PIER NO. 2		81.7		19.1		20			468		5262															210	246				
PIER NO. 3		75.9		27.7		24			6511																	283					
PIER NO. 4		74.9		27.7		24			6511																	150					
PIER NO. 5		81.5		19.1		20			468		5262															218	246				
BENT NO. 6			12.2								5013				1	35				30	17							9			
SUPERSTRUCTURE	392.8						53.4		2423		86416							136	644			90.2	463	1153.5	28		16438				3
R.C. BRIDGE APPR. SLABS					4			81.4	6334	166.2	1500																		80	263.4	
MISCELLANEOUS												450	32	132			560														
SUB-TOTAL	392.8	314.0	24.4	93.6	4	88	53.4	81.4	22715	166.2	108483	450	32	132	2	70	560	136	644	60	34	90.2	463	1153.5	28	861	16930	18	80	263.4	3
E.B. STRUCTURE																															
SUBSTRUCTURES																															
BENT NO. 1			12.2								5013				1	35				30	17							9			
PIER NO. 2		81.6		19.1		20			468		5262															209	246				
PIER NO. 3		75.9		27.7		24			6483																	282					
PIER NO. 4		75.2		27.7		24			6545																	168					
PIER NO. 5		83.5		19.1		20			468		5358															231	246				
BENT NO. 6			12.2								5030				1	35				30	17							9			
SUPERSTRUCTURE	392.8						53.4		2423		86416							136	644			90.2	463	1153.5	28		16438				3
R.C. BRIDGE APPR. SLABS					4			81.4	6334	166.2	1500																		80	263.4	
MISCELLANEOUS												470	36	134			560														
SUB-TOTAL	392.8	316.2	24.4	93.6	4	88	53.4	81.4	22721	166.2	108579	470	36	134	2	70	560	136	644	60	34	90.2	463	1153.5	28	890	16930	18	80	263.4	3
TOTALS	785.6	630.2	48.8	187.2	8	176	106.8	162.8	45436	332.4	217062	920	68	266	4	140	1120	272	1288	120	68	180.4	926	2307	56	1751	33860	36	160	526.8	6

* ESTIMATED QUANTITIES

APPROACH STRUCTURES

BRIDGE FILE

STRUCT. NO.	LOCATION	DESCRIPTION SIZE	DESCRIPTION KIND	LENGTH LIN.FT.	CONC.CL.A IN STRS. CU.YDS.	REINF. STEEL LBS.	PIPE END SECTION EACH	"B" BORROW FOR STR. BACKFILL CU. YDS.	REMARKS
–	–	–	–	–	–	–	–	–	–
				TOTALS					Totals for Reinf. Steel carried to "Structure Quantities"

REVETMENT RIPRAP SIDE DITCH AND SODDING SUMMARY

LEFT or RIGHT	STATION to STATION	REVETMENT RIPRAP CYS	REVETMENT RIPRAP TONS	GEOTEXTILES SYS	SODDING (SQ. YD.) FOR PSD	SODDING (SQ. YD.) FOR DITCHES	SODDING (SQ. YD.) SHOULDERS	SODDING (SQ. YD.) OTHER	SODDING (SQ. YD.) TOTAL SOD
–	–	–	–	–	–	–	–	–	–

APPROACH TABLE

LOCATION LT/RT	LOCATION STATION	DESCRIPTION	WIDTH FT.	RADII FT.	GRADE %	LENGTH FT.	DISTANCE BEYOND R/W IN FT.	EXCAVATION(CYS) CUT	EXCAVATION(CYS) FILL	BIT. SURFACE #/SQ.YD.	BIT. SURFACE TONS	BIT. BINDER #/SQ.YD.	BIT. BINDER TONS	BIT. BASE #/SQ.YD.	BIT. BASE TONS	COMP. AGG. BASE DEPTH(IN.)	COMP. AGG. BASE TONS
–	–	–	–	–	–	–	–	–	–	–	–	–	–	–	–	–	–

NOTES:

Weight of spirals includes weight of 1 1/2 extra turns, top and bottom. Spacers and 1 1/2 turns at laps are included in the cost of the spiral.

*** The weight of the structural steel is approximate only, and it shall be the Contractor's responsibility to determine the weight on which he bases his bid.

For Test Bar Samples, see Bridge Standard C1.

REVISIONS

DATE	ITEM
–	–

BRIDGE SUMMARY

INDIANA DEPARTMENT OF TRANSPORTATION

SCALE: NONE DATE: 10/21 1993

Thomas S. Sharp

SHEET: 23 OF 37

PROJECT: IM-70-2(072)

BRIDGE CONTRACT NO. R-20970

BRIDGE FILE: I-70-51-5178C

THOMAS S. SHARP REGISTERED 16806 STATE OF INDIANA PROFESSIONAL ENGINEER

5178BSUM/48

PLOT DATE & TIME: OCT 13, 1993 – 13:21:51

DESIGNED: CHECKED: DRAWN: SLG 10/93 CHECKED: LS 10/93 REVISED: CHECKED:

SHEET REVISED: MAY 18, 1993

R-20970

FABRICATION AND ERECTION NOTES

ALL STRUCTURAL STEEL SHALL CONFORM TO ASTM A709GR50 UNLESS NOTED OTHERWISE.

BOLTED CONNECTIONS SHALL BE MADE WITH HIGH STRENGTH BOLTS 7/8" DIA. UNLESS OTHERWISE NOTED. OPEN HOLES SHALL BE 15/16" DIA. UNLESS NOTED.

ALL PAINT SHALL BE IN ACCORDANCE WITH THE CURRENT STATE HIGHWAY SPECIFICATIONS. SHOP PAINT: ZINC SILICATE PAINT; FIELD PAINT: VINYL FINISH COAT, MUST BE COMPATIBLE WITH SHOP COAT (CARBOLINE)

STRUCTURAL STEEL FOR WELDING MAY BE FLAME CUT IF THE FLAME CUTTING IS MECHANICALLY GUIDED. HAND FLAME CUTTING SHALL BE USED ONLY WHEN APPROVED AND THE SURFACE IS FURTHER TREATED BY MILLING AND GRINDING OR CHIPPING AND GRINDING.

CURVED SURFACES OF SHOES SHALL BE MACHINED AFTER WELDMENTS HAVE BEEN MADE.

IF CURVES IN PLATES AND ANGLES ARE FLAME CUT, THEY SHALL BE GROUND SMOOTH.

BEAMS MUST BE CAMBERED TO A SMOOTH CURVE. CAMBER MUST BE CHECKED AFTER WELDING IS COMPLETED AND WHILE BEAMS ARE SUPPORTED IN SUCH A WAY AS TO HAVE NO BENDING MOMENT IN THE DIRECTION OF CAMBER.

WHEN THE BEAM SECTIONS ARE FIT UP IN THE SHOP FOR REAMING OR DRILLING OF FILED SPLICES, THE CENTERLINE OF APPOSING FLANGES SHALL NOT DEVIATE MORE THAN 1/8" WITH THE WEBS IN ALIGNMENT.

HOLES FOR BEAM SPLICES AND SPLICE PLATES SHALL BE DRILLED FULL SIZE WHILE ASSEMBLED.

DIAMETER OF HOLES IN ALL MATERIAL CONNECTION TOP SHOES OR BEARING PLATE TO BEAM FLANGES TO BE 1" DIAMETER. (1/8" LARGER THAN THE DIAMETER OF THE BOLTS) BOLTS CONNECTING BEAM FLANGE TO TOP SHOE SHALL EXTEND INTO THE TOP SHOE A MINIMUM OF ONE (1) INCH.

SHIMS BETWEEN BEAMS AND TOP SHOE OR BEARING PLATE MAY BE BUILT-UP. NO SHIM SHALL BE LESS THAN 1/8" THICKNESS.

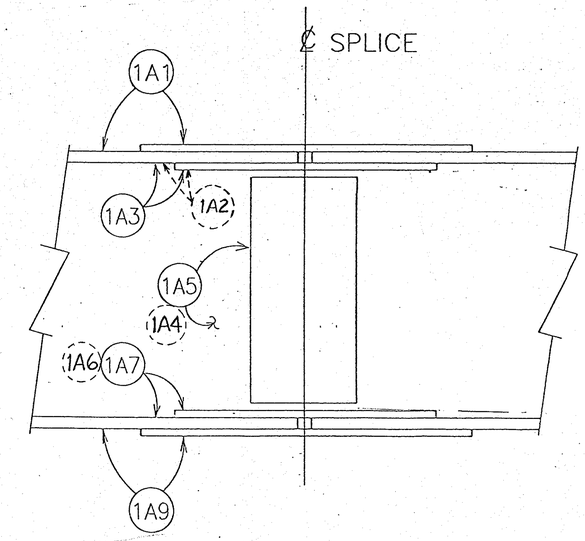

#1=BEAM LINE NO.
A=SPLICE LETTER
ODD. NO.=NEARSIDE
EVEN. NO.=FARSIDE

NOTE: IF FILL PLATES ARE USED, MARK SAME AS FLG. OR WEB SPL. PLATE NO.

BOLT LIST (7/8"ϕ A325 BOLTS)

LOCATION (A325 BOLTS)	ORD.	GRIP	DIA.	LGTH	SHOP	FIELD
Top & Bott. Flg. Spl.		1 5/8"	7/8"ϕ	3"		176
Web Splice		1 13/16"	7/8"ϕ	3 1/4"		96
Diaph. Conn. L's To Bm. Web		15/16"	7/8"ϕ	2 1/4"	12	8
Top Shoe Bolts		1 1/2"	7/8"ϕ	2 1/2"		8
Lock Washers (@ Top Shoe Bolts)			7/8"ϕ	—		8
Hard Flat Washers			7/8"ϕ	—	12	280

INDIANA DEPARTMENT OF TRANSPORTATION

BRIDGE FILE: I-70-44-5171C
CONTRACT NO: R-20970
CUSTOMER: CONTRACTORS UNITED, INC.

COUNTY: PUTNAM
JOB NO: B-2393

THIS DRAWING AND ALL INFORMATION THEREON IS THE PROPERTY OF INDIANA STEEL & ENGINEERING CORP. AND IS CONFIDENTIAL AND MUST NOT BE MADE PUBLIC OR COPIED WITHOUT THEIR EXPRESSED WRITTEN AUTHORITY AND IS SUBJECT TO RECALL UPON THEIR DEMAND.

ERECTOR NOTE:
(1) INSTALL MEMBERS WITH MARK AT END SHOWN ON PLAN
(2)

HOLES BOLTS UNLESS NOTED

APP. | APP. RECD. | RE-APP. | ARCHITECT | CUSTOMER | SHOP PAINT
SHOP | DIST. | ERECTOR | DR. BY / DATE | CHK. / DATE | JOB LOCATION

INDIANA STEEL & ENGINEERING CORP.
957 J Street — P.O. Box 668 — Area 812 275-3363
BEDFORD, INDIANA 47421

SH. OF
JOB NO. 2393
DRAWING NO. TITLE

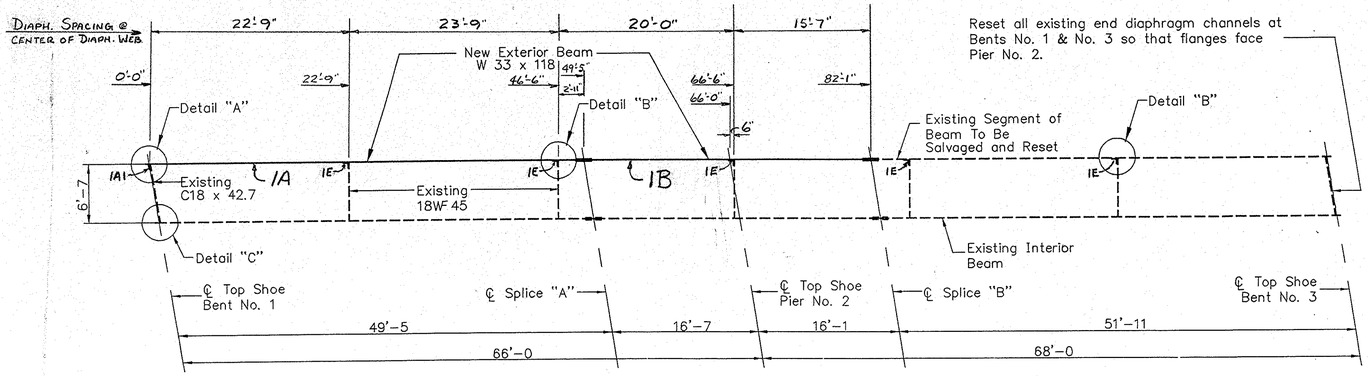

FRAMING PLAN – WESTBOUND STRUCTURE

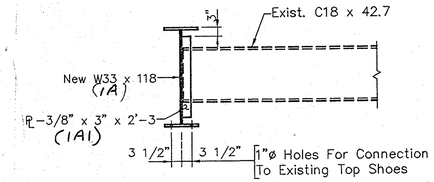

SECTION "A–A"

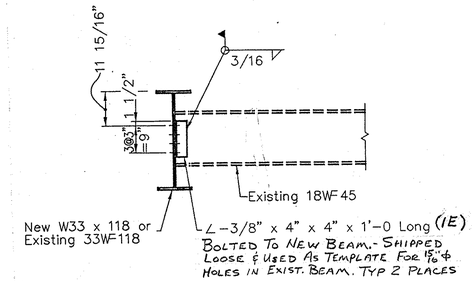

SECTION "B–B"

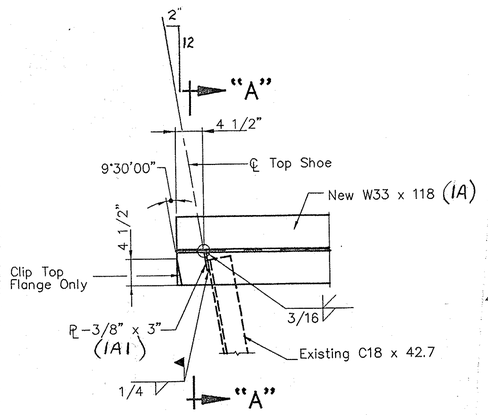

DETAIL "A"

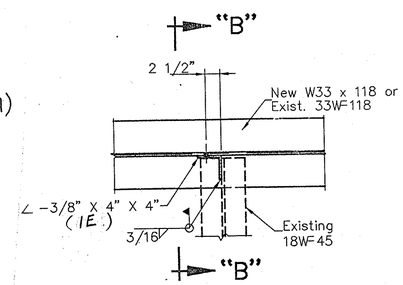

DETAIL "B"

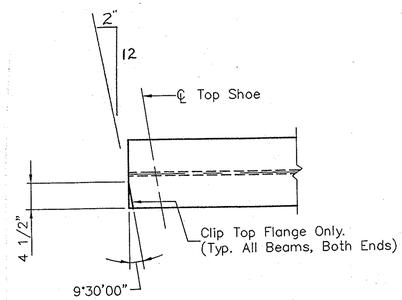

DETAIL "C"

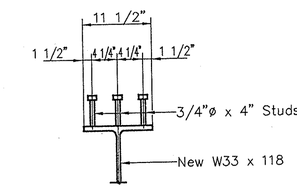

COMPOSITE BEAM DETAIL

(SHOWING PLACEMENT OF SHEAR CONNECTORS)

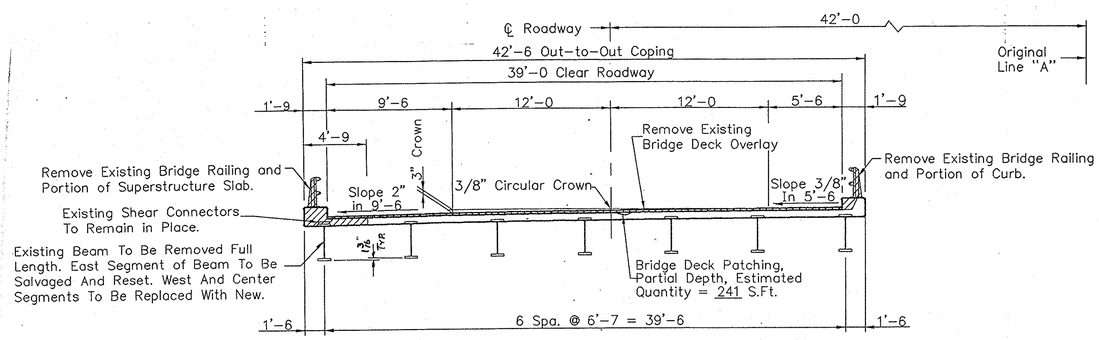

TYPICAL SECTION – W.B.STRUCTURE

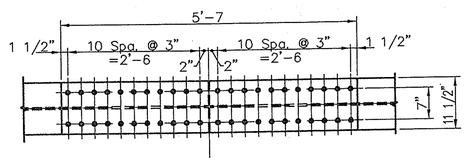

PLAN

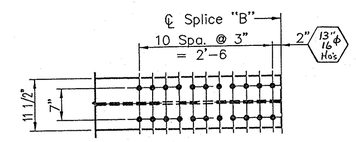

PLAN

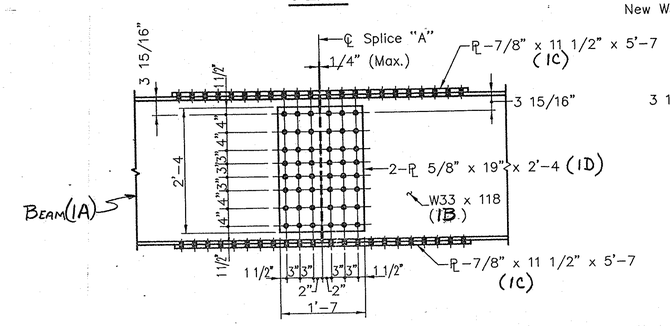

ELEVATION
SPLICE "A" DETAIL

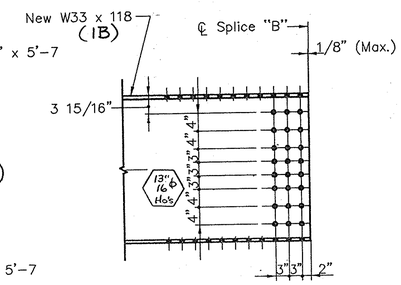

ELEVATION
HOLE PATTERN FOR SPLICE "B"

ERECTOR NOTE: ALL HOLES THIS END OF BEAM WILL BE DRILLED 13/16"ϕ IN SHOP FOR FIELD REAMING USING EXISTING SPLICE PLATES AS TEMPLATES

THIS DRAWING AND ALL INFORMATION THEREON IS THE PROPERTY OF INDIANA STEEL & ENGINEERING CORP. AND IS CONFIDENTIAL AND MUST NOT BE MADE PUBLIC OR COPIED WITHOUT THEIR EXPRESSED WRITTEN AUTHORITY AND IS SUBJECT TO RECALL UPON THEIR DEMAND.

ERECTOR NOTE:
(1) INSTALL MEMBERS WITH MARK AT END SHOWN ON PLAN
(2)

HOLES 15/16"ϕ BOLTS 7/8"ϕ A325 UNLESS NOTED

1	4	APP.	APP. RECD.	RE-APP.	ARCHITECT INDIANA D.O.T.	CUSTOMER CONTRACTORS UNITED	SHOP PAINT ZINC SILICATE PRIMER
2	5	SHOP	DIST.	ERECTOR	DR. BY J. RAT. / DATE 4-29-94	CHK. / DATE	JOB LOCATION I-70 OVER U.S.231 PUTNAM CO. IN. CONTRACT: R-20970 STR. No. I-70-44-5171C PROJ. ACIM-70-2(072) STA. #2
3	6						

INDIANA STEEL & ENGINEERING CORP.
957 J Street – P.O. Box 668 – Area 812 275-3363
BEDFORD, INDIANA 47421

SH. OF
JOB NO. 2393
DRAWING NO. E-1

R01002
POST

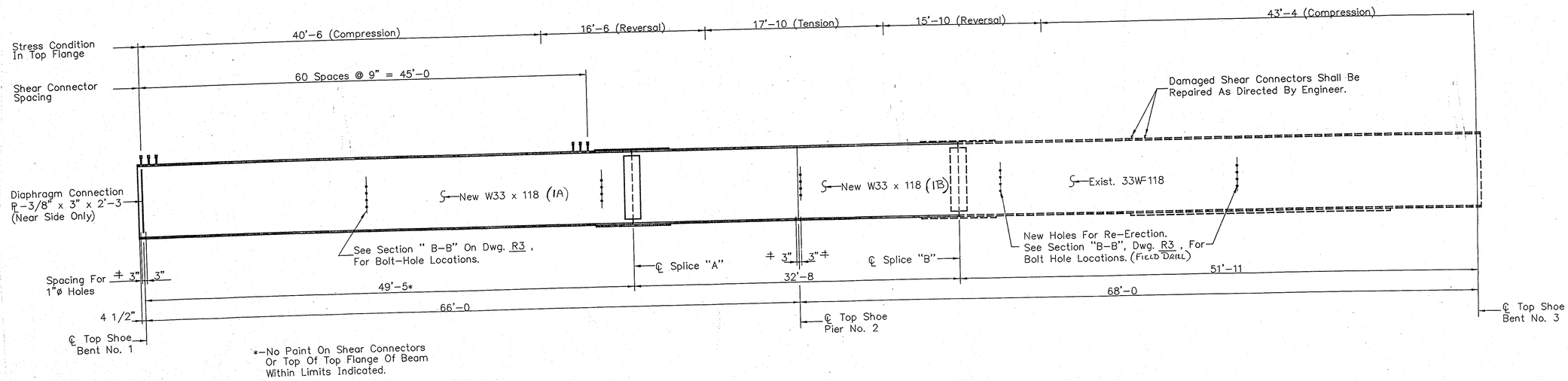

*-No Paint On Shear Connectors Or Top Of Top Flange Of Beam Within Limits Indicated.

‡-Holes For Connection To Existing Top Shoes

ELEVATION OF EXTERIOR BEAM

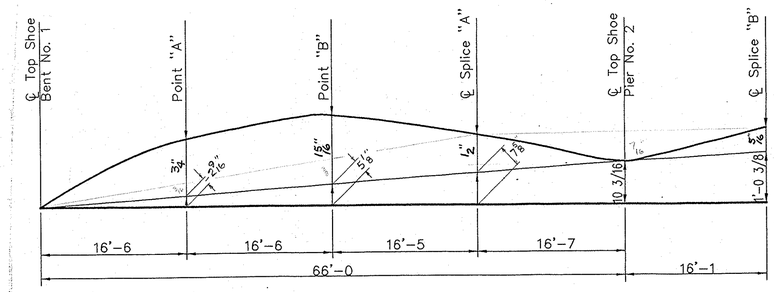

NO LOAD CAMBER AND REAMING DIAGRAM

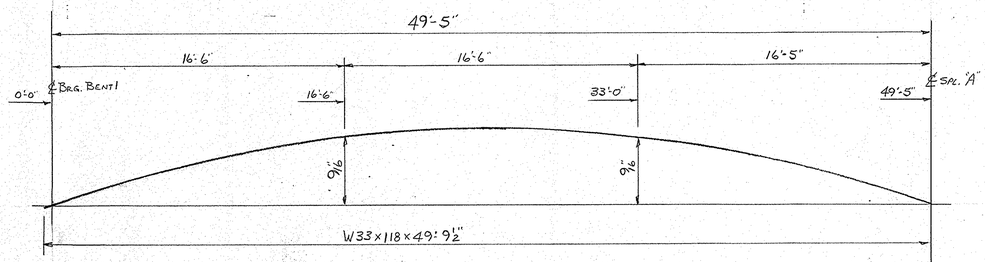

CAMBER DIAGRAM-BEAM 1A

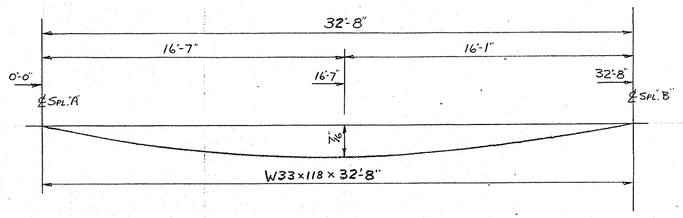

CAMBER DIAGRAM - BEAM 1B

THIS DRAWING AND ALL INFORMATION THEREON IS THE PROPERTY OF INDIANA STEEL & ENGINEERING CORP. AND IS CONFIDENTIAL AND MUST NOT BE MADE PUBLIC OR COPIED WITHOUT THEIR EXPRESSED WRITTEN AUTHORITY AND IS SUBJECT TO RECALL UPON THEIR DEMAND.

ERECTOR NOTE:
(1) INSTALL MEMBERS WITH MARK AT END SHOWN ON PLAN
(2)

HOLES 15/16" ϕ BOLTS 7/8" ϕ A325 UNLESS NOTED

1	4	APP.	APP. RECD.	RE-APP.	ARCHITECT INDIANA D.O.T.	CUSTOMER CONTRACTORS UNITED	SHOP PAINT ZINC SILICATE PRIMER
2	5	SHOP	DIST.	ERECTOR	DR. BY J. RAT.	JOB LOCATION I-70 OVER U.S. 231 PUTNAM CO, IN. CONTRACT: R-20970	
3	6				DATE 4-29-99	CHK.	DATE
						STR. No. - I-70-44-5171C PROJ: ACIM-70-2(072) STR. #2	

INDIANA STEEL & ENGINEERING CORP.
957 J Street — P.O. Box 668 — Area 812 275-3363
BEDFORD, INDIANA 47421

SH. OF
JOB NO. 2393
DRAWING NO. E-2

R051 R03/02

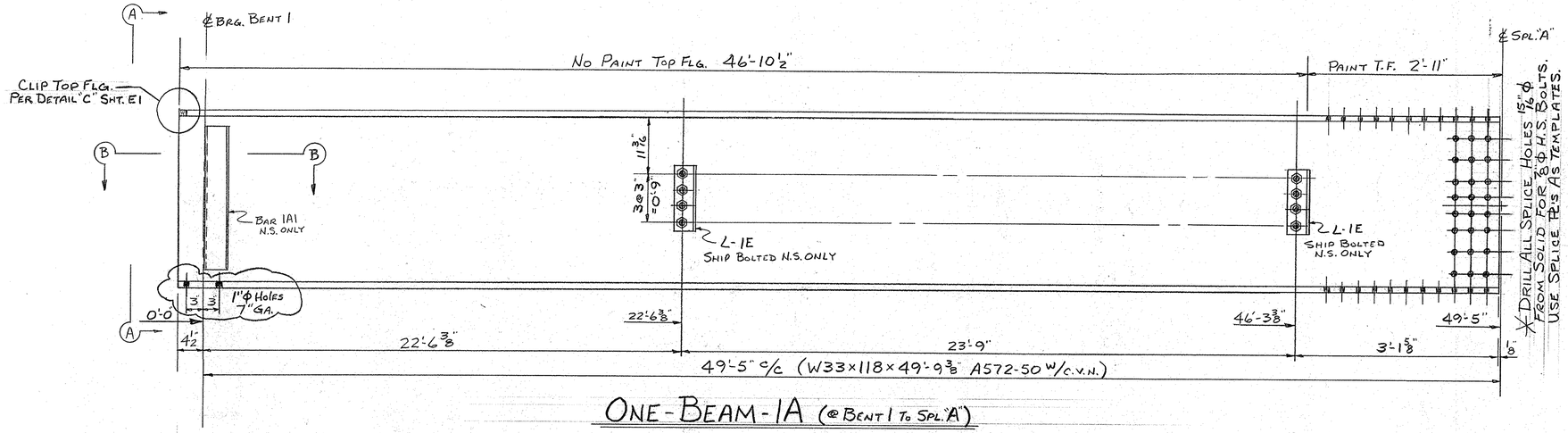

ONE-BEAM-1A (@ BENT 1 TO SPL. "A")

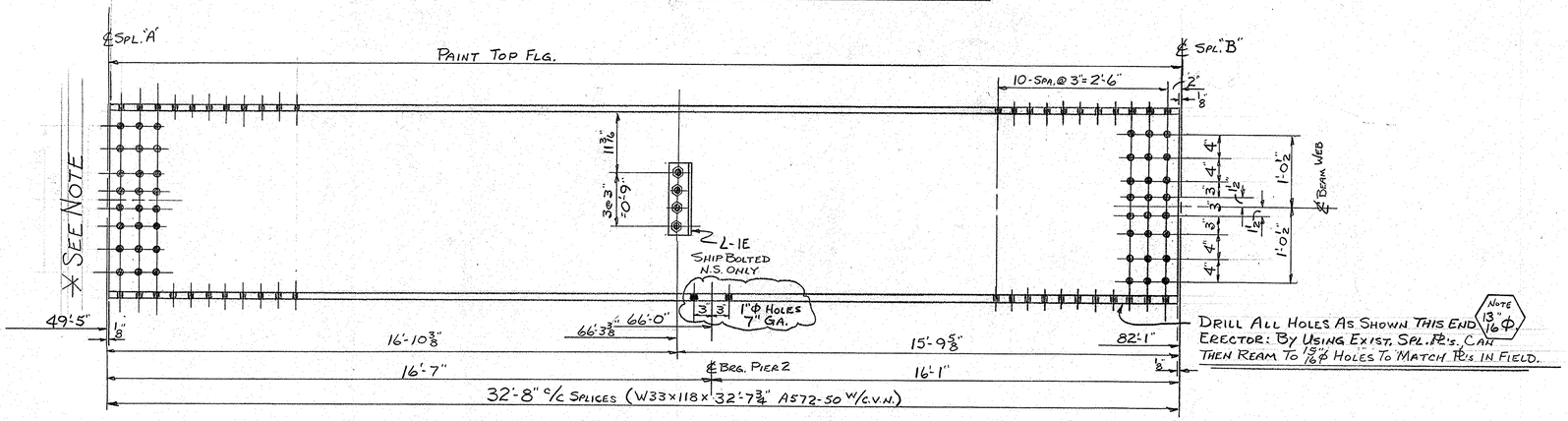

ONE-BEAM-1B (@ SPL. "A" TO SPL. "B")

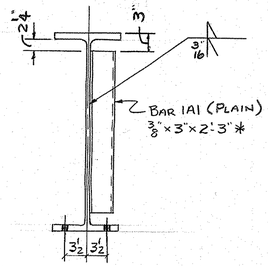

VIEW-"AA"

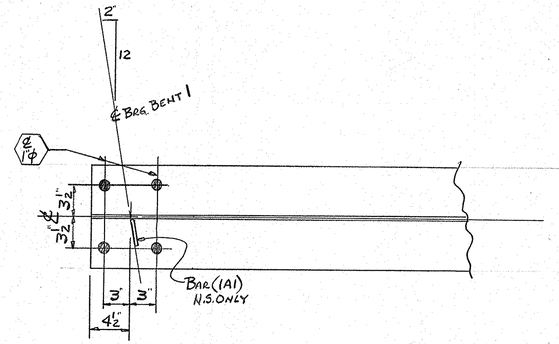

SECT. - "BB"

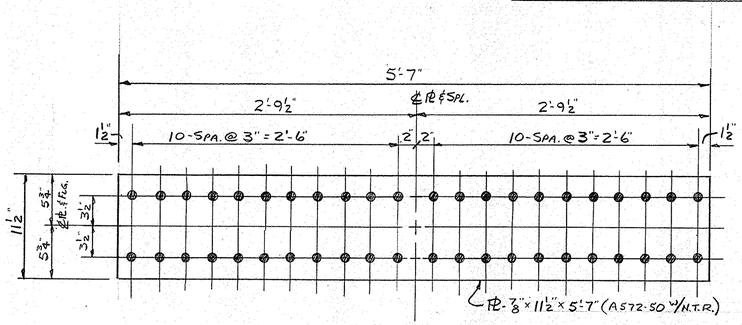

2-SPLICE PL'S — 1C

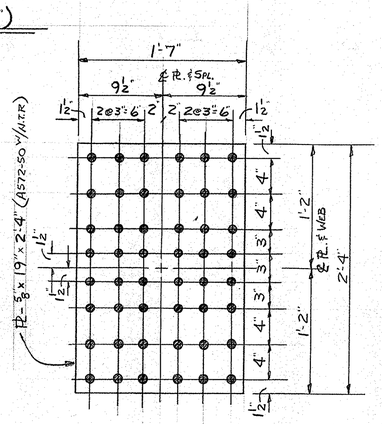

2-SPLICE-PL'S — 1D

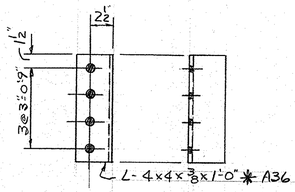

5-CONN. L'S. — 1E

3: BOLT TO BMS. IN SHOP
2: SHIP LOOSE & FIELD BOLT TO EXIST. BMS.

* NO MILL CERTS REQ'D.

THIS DRAWING AND ALL INFORMATION THEREON IS THE PROPERTY OF INDIANA STEEL & ENGINEERING CORP. AND IS CONFIDENTIAL AND MUST NOT BE MADE PUBLIC OR COPIED WITHOUT THEIR EXPRESSED WRITTEN AUTHORITY AND IS SUBJECT TO RECALL UPON THEIR DEMAND.

ERECTOR NOTE:
(1) INSTALL MEMBERS WITH MARK AT END SHOWN ON PLAN
(2)

HOLES 15/16"Φ BOLTS ⅞"Φ A325 UNLESS NOTED

1	4	APP.	APP. RECD.	RE-APP.	ARCHITECT INDIANA D.O.T.	CUSTOMER CONTRACTORS UNITED	SHOP PAINT
2	5	SHOP	DIST.	ERECTOR	DR. BY J. RAT. DATE 5-3-94	CHK. DATE	JOB LOCATION I-70 OVER U.S. 231 PUTNAM CO., IN. CONTRACT R-20970 STR. NO. I-70-44-5171C PROJ. ACIM-70-2(072) STR. #2
3	6						

INDIANA STEEL & ENGINEERING CORP.
957 J Street — P.O. Box 668 — Area 812 275-3363
BEDFORD, INDIANA 47421

SH. OF
JOB NO. 2393
DRAWING NO. 1

R93062
POST