INDIANA DEPARTMENT OF TRANSPORTATION

BRIDGE PLANS

FOR SPANS OVER 20 FEET

PROJECT NO. ST-65-3(109) P.E.
ST-65-3(110) P.E.
R/W
IM-65-3(258)109 CONST.

I-65 BRIDGE AND ROAD RECONSTRUCTION FROM 0.644 km NORTH OF KEYSTONE AVENUE TO 1.400 km NORTH OF RAYMOND STREET LOCATED IN SEC. 30, T15N, R4E IN PERRY TOWNSHIP AND SEC. 19 & 18, T15N, R4E IN CENTER TOWNSHIP AND SEC. 13, T15N, R3E IN CENTER TOWNSHIP , ALL IN MARION COUNTY.

TRAFFIC DATA	
A.A.D.T. (1991)	72,800 V.P.D.
A.A.D.T.	V.P.D.
D.H.V.	V.P.H.
DIRECTIONAL DISTRIBUTION	%
TRUCKS	% D.H.V.
	% A.A.D.T.
DESIGN DATA	
DESIGN SPEED	90 K.P.H. SOUTH OF PLEASANT RUN
DESIGN SPEED	80 K.P.H. NORTH OF PLEASANT RUN
ACCESS CONTROL	FULL
FUNCTIONAL CLASSIFICATION	URBAN FREEWAY (INTERSTATE)
TERRAIN	LEVEL

PROJECT LOCATION SHOWN BY

SCALE: 1:20000

BRIDGE FILE	TYPE	SPAN AND SKEW	OVER	DESIGNATION
I-65-109-5691A	CONTINUOUS COMPOSITE STEEL BEAM	2 @ 23 317 & 23 317 SKEW: 19°21'01" RIGHT	TROY AVENUE	8462680
I-65-110-5622A	CONTINUOUS COMPOSITE STEEL BEAM	5 @ 12 497, 21 031, 21 031, 21 031 & 15 088 SKEW: 19°36'52" RIGHT	NELSON STREET AND BEAN CREEK	8462690
I-65-110-5692A	CONTINUOUS COMPOSITE STEEL BEAM	3 @ 10 363, 18 973 & 10 363 SKEW: 17°35'45" RIGHT	SOUTHERN AVENUE	8462700
I-65-110-5693A/JA	CONTINUOUS COMPOSITE STEEL BEAM	3 @ 10 821, 13 792 & 10 821 SKEW: 3°07'37" RIGHT	BRADBURY AVENUE	8462710
I-65-110-5694A	CONTINUOUS COMPOSITE STEEL BEAM	2 @ 22 098 & 23 013 SKEW: 1°22'59" RIGHT	RAYMOND STREET	8462720
I-65-110-2422A/JA	CONTINUOUS COMPOSITE STEEL BEAM	3 @ 16 155, 25 070 & 16 155 SKEW: 0°	CONRAIL RAILROAD	8462730
I-65-111-5695A/JA	CONTINUOUS COMPOSITE STEEL BEAM	3 @ 13 411, 16 459 & 13 411 SKEW: 0°	NAOMI STREET	8462740
I-65-111-5623B/JA SOUTHBOUND	CONTINUOUS COMPOSITE STEEL BEAM	7 @ 11 287, 20 433, 22 473, 22 260, 13 418, 23489 & 13 432 SKEW: VARIABLE 7 @ 11 268, 20 411, 17 153, 22 244, 13 399, 23 454 & 13 426 SKEW: VARIABLE	PLEASANT RUN PARKWAY, S. DRIVE, PLEASANT RUN AND PLEASANT RUN PARKWAY, N. DRIVE	8348170
I-65-111-5696A/JA	CONTINUOUS COMPOSITE STEEL BEAM	4 @ 17 374, 21 793, 21 031 & 14 173 SKEW: 42°35'25" LEFT	SHELBY STREET	8462750

[INDIANA DEPARTMENT OF TRANSPORTATION STANDARD SPECIFICATIONS DATED 1995 TO BE USED WITH THESE PLANS]

INDEX

BRIDGE FILE	OVER	SHEET NO.	DRAWING NO.	SUBJECT
		1		BRIDGE TITLE SHEET
		2		BRIDGE PLAN INDEX (CONTINUED)
		3		STANDARD DRAWING INDEX
I-65-109-5691A	TROY AVENUE	4	C1	GENERAL PLAN
		5	C2	STRUCTURE SECTION
		6	C3	BENT NO. 1 & NO. 3 N.B. & S.B. REMOVAL
		7 - 8	C4 - C5	BENT NO. 1 S.B. DETAILS
		9	C6	BENT NO. 2 S.B. DETAILS
		10 - 11	C7 - C8	BENT NO. 3 S.B. DETAILS
		12 - 13	C9 - C10	BENT NO. 1 N.B. DETAILS
		14	C11	BENT NO. 2 N.B. DETAILS
		15	C12	BENT NO. 2 N.B. & S.B. DETAILS
		16 - 17	C13 - C14	BENT NO. 3 N.B. DETAILS
		18	C15	FRAMING PLAN (S.B. STRUCTURE)
		19	C16	FRAMING PLAN (N.B. STRUCTURE)
		20 - 22	C17 - C19	STRUCTURAL STEEL DETAILS
		23	C20	FLOOR DETAILS (N.B. STRUCTURE)
		24	C21	FLOOR DETAILS (N.B. & S.B. STRUCTURES)
		25	C22	CONCRETE BRIDGE RAILING DETAILS
		26	C23	CONCRETE BRIDGE RAILING TRANSITION DETAILS
		27	C24	MISCELLANEOUS DETAILS
		28	C25	BRIDGE APPROACH SLAB DETAILS
		29		SUMMARY SHEET
I-65-110-5622A	NELSON STREET AND	30	D1	GENERAL PLAN
	BEAN CREEK	31	D2	STRUCTURE SECTION
		32	D3	BENT NO. 1 N.B. & S.B. REMOVAL
		33	D4	BENT NO. 6 N.B. & S.B. REMOVAL
		34	D5	BENT NO. 1 S.B. DETAILS
		35	D6	BENT NO. 2 S.B. DETAILS
		36	D7	BENT NO. 3 S.B. DETAILS
		37	D8	BENT NO. 4 S.B. DETAILS
		38	D9	BENT NO. 5 S.B. DETAILS
		39	D10	BENT NO. 6 S.B. DETAILS
		40	D11	BENT NO. 1 & NO. 6 S.B. DETAILS
		41	D12	BENT NO. 1 N.B. DETAILS
		42	D13	BENT NO. 2 N.B. DETAILS
		43	D14	BENT NO. 3 N.B. DETAILS
		44	D15	BENT NO. 4 N.B. DETAILS
		45	D16	BENT NO. 4 N.B. & S.B. DETAILS
		46	D17	BENT NO. 5 N.B. DETAILS
		47	D18	BENT NO. 5 N.B. & S.B. DETAILS
		48	D19	BENT NO. 6 N.B. DETAILS
		49	D20	BENT NO. 1 & NO. 6 N.B. DETAILS
		50 - 51	D21 - D22	FRAMING PLAN (S.B. STRUCTURE)
		52 - 53	D23 - D24	FRAMING PLAN (N.B. STRUCTURE)
		54 - 56	D25 - D27	STRUCTURAL STEEL DETAILS
		57 - 58	D28 - D29	FLOOR DETAILS (N.B. STRUCTURE)
		59	D30	FLOOR DETAILS (N.B. & S.B. STRUCTURES)
		60	D31	CONCRETE BRIDGE RAILING DETAILS
		61	D32	CONCRETE BRIDGE RAILING TRANSITION DETAILS
		62	D33	MISCELLANEOUS DETAILS
		63	D34	BRIDGE APPROACH SLAB DETAILS
		64		SUMMARY SHEET
I-65-110-5692A	SOUTHERN AVENUE	65	E1	GENERAL PLAN
		66	E2	STRUCTURE SECTION
		67	E3	BENT NO. 1 N.B. & S.B. REMOVAL
		68	E4	BENT NO. 4 N.B. & S.B. REMOVAL
		69	E5	BENT NO. 1 S.B. DETAILS
		70	E6	BENT NO. 2 S.B. DETAILS
		71	E7	BENT NO. 3 S.B. DETAILS
		72	E8	BENT NO. 4 S.B. DETAILS

NOTE: FOR CONTINUATION OF INDEX, SEE SHEET 2.

R -22528
PART 3 OF 7

REVISIONS	
DATE	SHEET NO.
9-08-96	29, 64, 92, 123, 148, 176, 201, 253, 301

FEDERAL HIGHWAY ADMINISTRATION
U.S. DEPT. OF TRANSPORTATION
APPROVED: _____ DATE
DIVISION ADMINISTRATOR

PLANS PREPARED BY: FINK, ROBERTS AND PETRIE, INC. (317) 872-8400 PHONE NUMBER
CERTIFIED BY: David T. Lash JULY 15, 1996 DATE
APPROVED FOR LETTING: Phelps N. Kibler 7/24/96 DATE
CHIEF, DIVISION OF DESIGN

DAVID T. LASH REGISTERED No. 20470 STATE OF INDIANA PROFESSIONAL ENGINEER

BRIDGE FILE	
DESIGNATION	
SHEETS	1 of 301
CONTRACT	PROJECT
R-22528	IM-65-3(258)109

F:\DOCUMENT\95096-C\DOFP3TTL 07/14/96 19:32:04 DLB

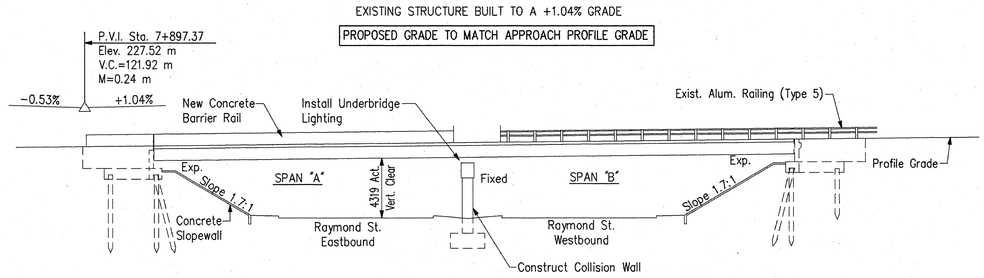

ELEVATION

Scale: 1:200

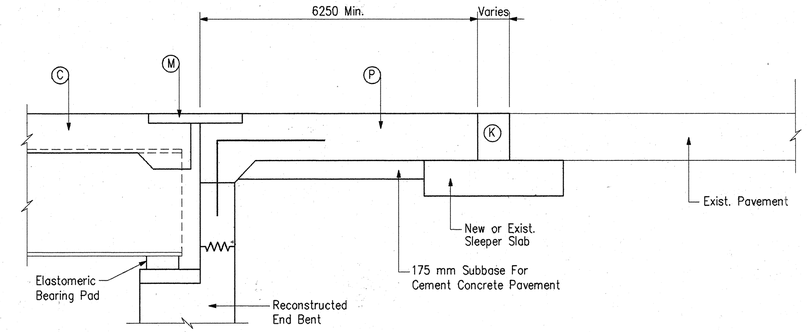

HALF LONGITUDINAL SECTION

No Scale

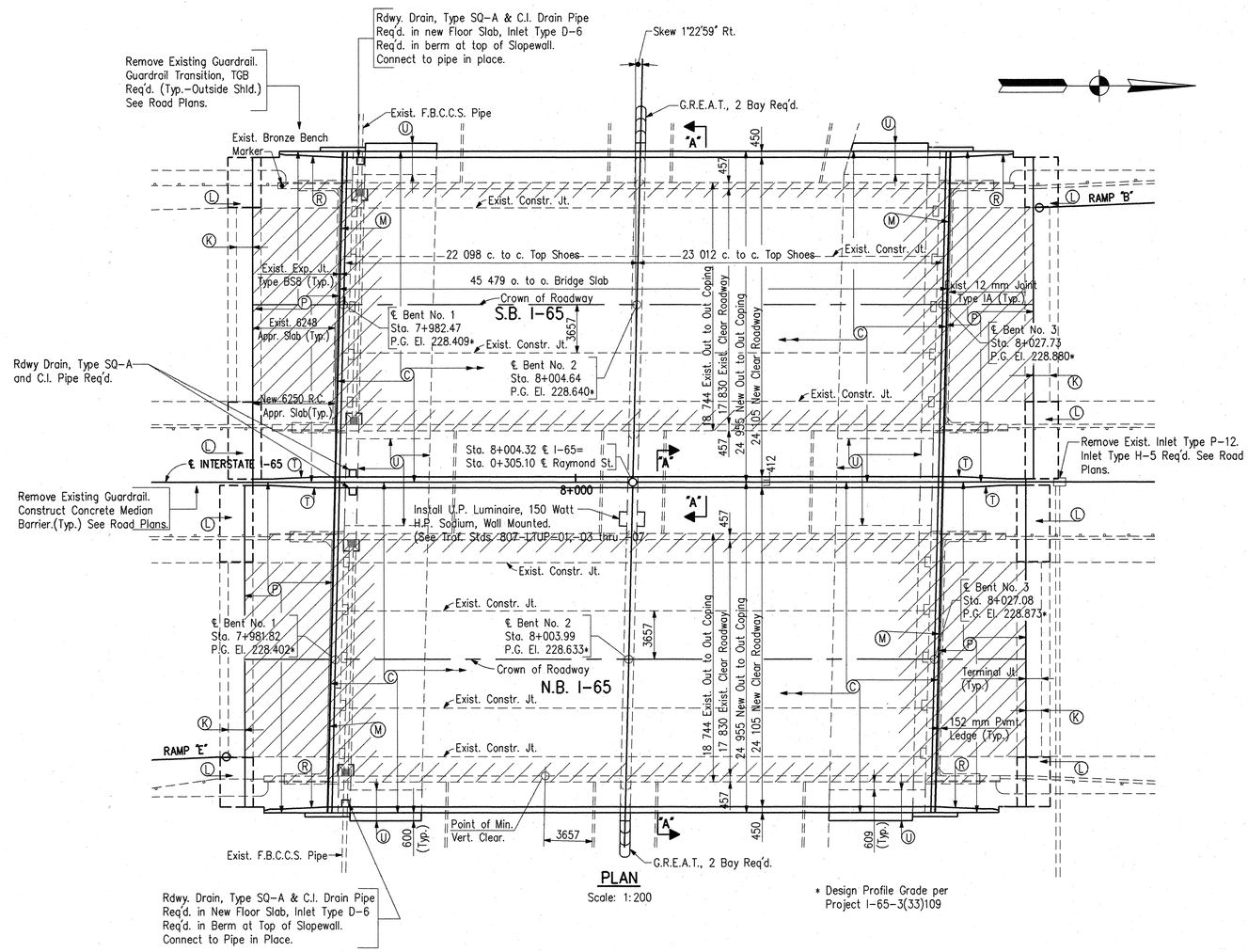

PLAN

Scale: 1:200

* Design Profile Grade per Project I-65-3(33)109

DESIGN DATA-PROPOSED

Live Load: HS20-44 Loading with Impact & Distribution of Loads in Accordance with 1992 AASHTO Specifications and Military Loading.

Dead Load: Actual Weight plus 1.0 kN/m² for future wearing surface.

Slab: Designed for 71 kN Wheel plus Impact.

NOTES

All dimensions are in millimeters (mm) and all elevations are in meters (m) except as noted.

Existing grades per Field Survey were found to average 0.05 m higher than Design Grade per Project I-65-3(33)109.

LEGEND

- (C) Reinforced Concrete Slab
- (K) Replace Bituminous Material in Terminal Joint
- (L) Sleeper Slab
- (M) Polymer Modified Asphalt Expansion Joint
- (P) 250 mm Reinforced Concrete Pavement
- (R) Concrete Barrier Rail Transition
- (T) Concrete Median Barrier Rail Transition
- (U) 120 mm Concrete Slopewall
- Concrete Removal Items

REHABILITATION OF TWIN CONTINUOUS STEEL BEAM BRIDGES
2 SPANS: 22 098, 23 012 SKEW 1°22'59" Rt.
23 312 CLEAR ROADWAY, CONCRETE BARRIER RAILS
MARION COUNTY

DWG. G1 of 24

DENNIS R. CLARK REGISTERED No. 17234 STATE OF INDIANA PROFESSIONAL ENGINEER

RECOMMENDED FOR APPROVAL — DESIGN ENGINEER — DATE 7-15-96

DESIGNED: DMS | DRAWN: DMS
CHECKED: DRC | CHECKED: DRC

INDIANA DEPARTMENT OF TRANSPORTATION

GENERAL PLAN
I-65 OVER RAYMOND STREET

HORIZONTAL SCALE	BRIDGE FILE
1:200	I-65-110-5694A
VERTICAL SCALE	DESIGNATION
1:200	8462720
SURVEY BOOK	SHEETS
	124 of 301
CONTRACT	PROJECT
R-22528	IM/65-3(258)109

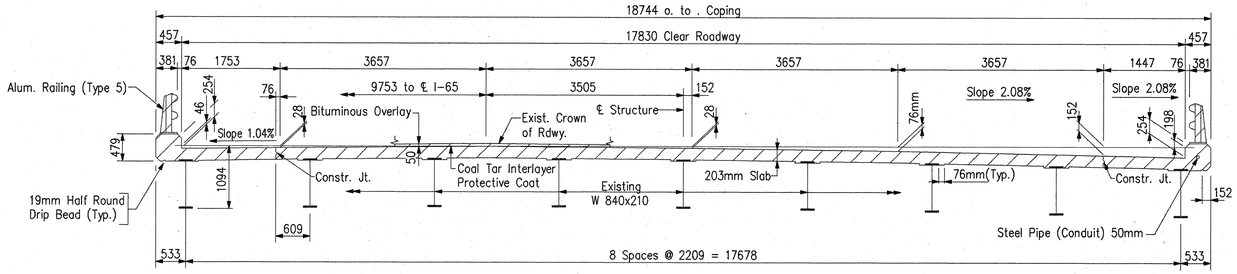

SECTION A-A ⊥ TO ℄ ROADWAY
(Showing Removals)
Scale: 1:50

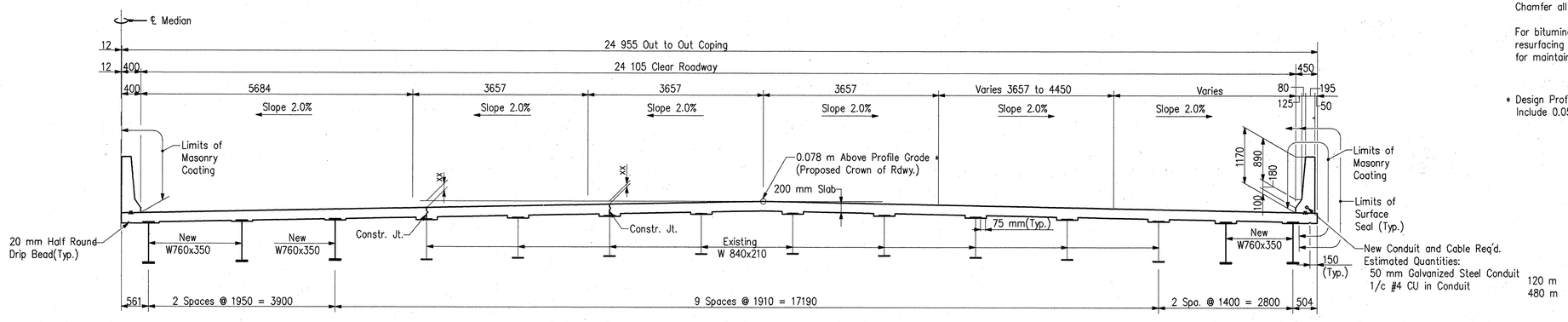

SECTION A-A ⊥ TO ℄ ROADWAY
(Showing New Construction)
Scale: 1:50

NOTES

All dimensions are in millimeters(mm) and all elevations are in meters(m) except as noted.

Removal Items

GENERAL NOTES

Plans for existing are on file and are available upon request in the Bridge Dept., Indiana Department of Transportation as:

Structure No. I-65-110-5694

Seal bridge floor, all faces of concrete railing, the coping face and underside of the decks to the exterior beams with a Portland Cement Concrete Sealer.

Masonry Coating (Color: Fed No. 27778) shall be applied to all faces of concrete railing, the deck coping and underside of the deck slab to the exterior beam.

All reinforcing steel shall be 420 MPa Grade.

Reinforcing covering shall be 60 mm in the top and 25 mm in the bottom of the floor slab and 50 mm in all other parts except as noted.

Concrete in superstructure and railings to be Class "C".

Concrete in substructure and collision wall to be Class "A".

Concrete in footings to be Class "B".

Chamfer all exposed edges 25 mm unless noted otherwise.

For bituminous material in Terminal Joints, bituminous resurfacing on approaches and bituminous shoulders and for maintaining traffic, see Road Plans.

* Design Profile Grade per Project I-65-3(33)109. Does not Include 0.05 m Grade Adjustment per Field Survey.

I-65 OVER RAYMOND STREET
REHABILITATION OF TWIN CONTINUOUS STEEL BEAM BRIDGES
2 SPANS 22098, 23012 SKEW 1°22'59"
24105 CLEAR ROADWAY CONCRETE BARRIER RAILS
MARION COUNTY

DWG. G2 OF 24

DENNIS R. CLARK REGISTERED No. 17234 STATE OF INDIANA PROFESSIONAL ENGINEER

RECOMMENDED FOR APPROVAL — DESIGN ENGINEER — 7-15-96 DATE

DESIGNED: DMS | DRAWN: DMS
CHECKED: DRC | CHECKED: DRC

INDIANA DEPARTMENT OF TRANSPORTATION

STRUCTURE SECTION
I-65 OVER RAYMOND STREET

HORIZONTAL SCALE	BRIDGE FILE
1:50	I-65-110-5694A
VERTICAL SCALE	DESIGNATION
1:50	8462720
SURVEY BOOK	SHEETS
	125 of 301
CONTRACT	PROJECT
R-22528	IM/65-3(258)109

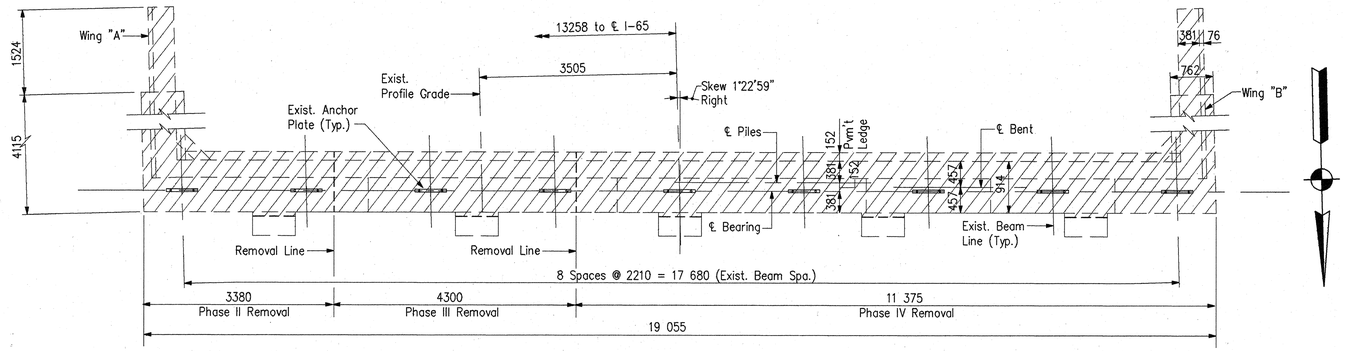

PLAN – BENT NO. 1 S.B.
(Showing Limits of Removal)

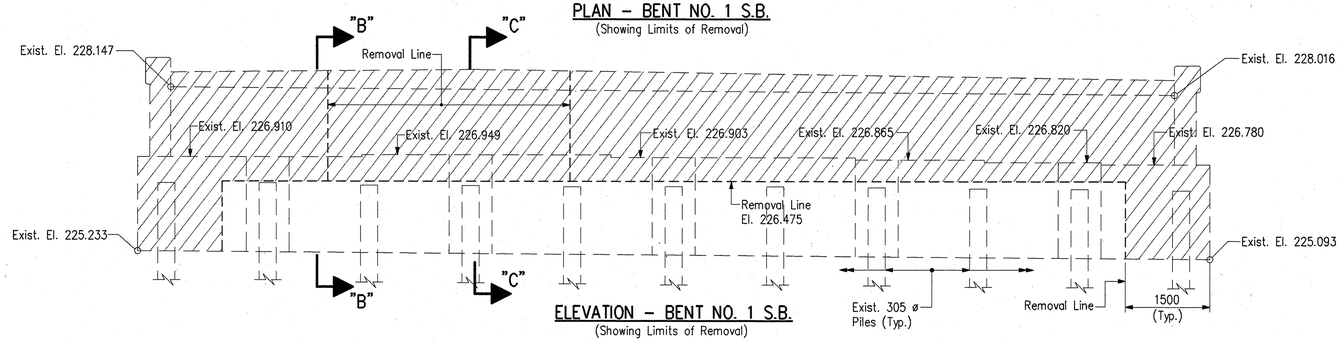

ELEVATION – BENT NO. 1 S.B.
(Showing Limits of Removal)

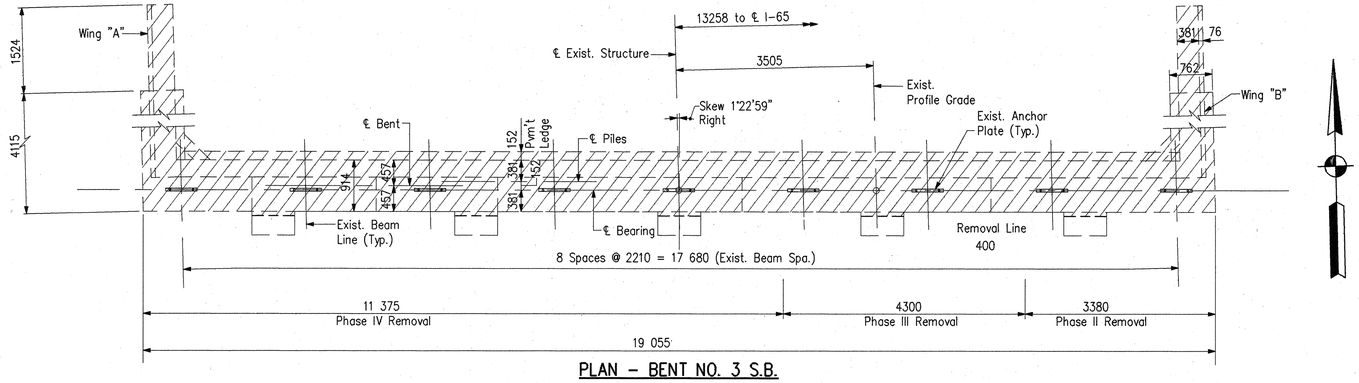

PLAN – BENT NO. 3 S.B.
(Showing Limits of Removal)

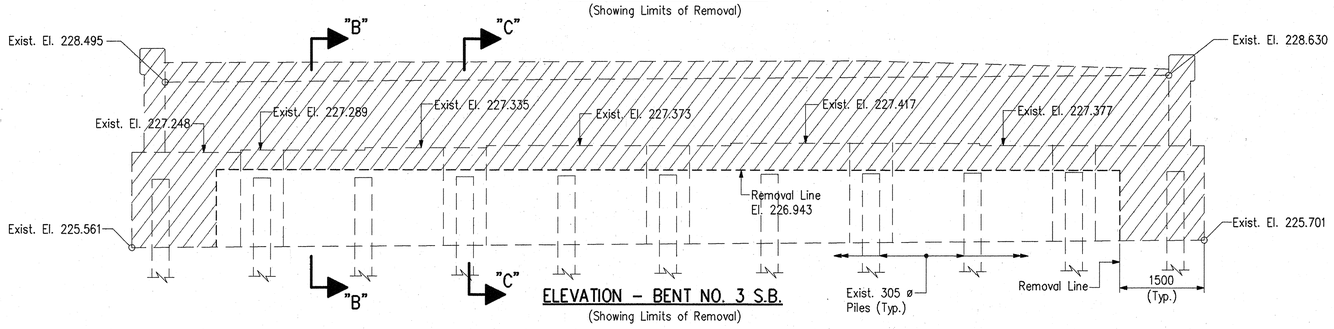

ELEVATION – BENT NO. 3 S.B.
(Showing Limits of Removal)

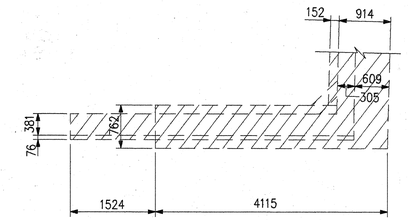

TYPICAL PLAN – WING "A"

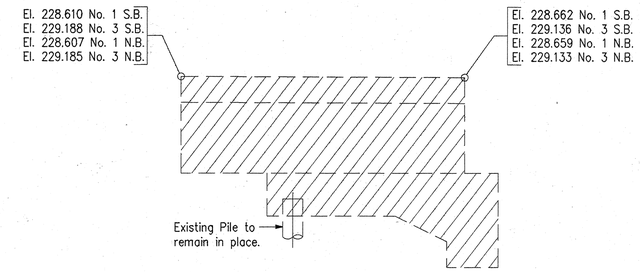

TYPICAL ELEVATION – WING "A"

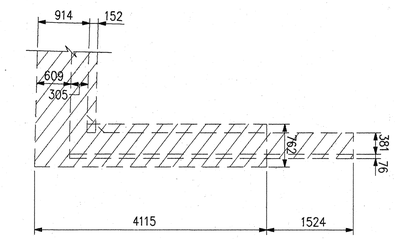

TYPICAL PLAN – WING "B"

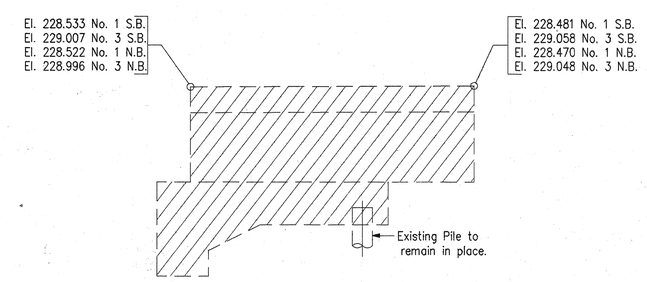

TYPICAL ELEVATION – WING "B"

NOTES:

- For General Notes, see Dwg. G2.
- For Sections "B–B" & "C–C", see Dwg. G8.
- For Bent No. 1 & 3 S.B. reconstruction Details, see Dwg. G4, G6 and G7.
- Exist. Grades per Field Survey were Found to Average 0.05 m Higher than Design Grade per Project I-65-3(33)109.

Indicates Removal Areas

DWG. G3 OF 24

DENNIS R. CLARK REGISTERED No. 17234 STATE OF INDIANA PROFESSIONAL ENGINEER

RECOMMENDED FOR APPROVAL — DESIGN ENGINEER — DATE 7-15-96

DESIGNED: DMS | DRAWN: PCR
CHECKED: DRC | CHECKED: DMS

INDIANA DEPARTMENT OF TRANSPORTATION

BENT NO. 1 & 3 S.B. REMOVAL DETAILS
I-65 OVER RAYMOND STREET

HORIZONTAL SCALE	BRIDGE FILE
1:50	I-65-110-5694A
VERTICAL SCALE	DESIGNATION
1:50	8462720
SURVEY BOOK	SHEETS
	126 of 301
CONTRACT	PROJECT
R-22528	IM/65-3(258)109

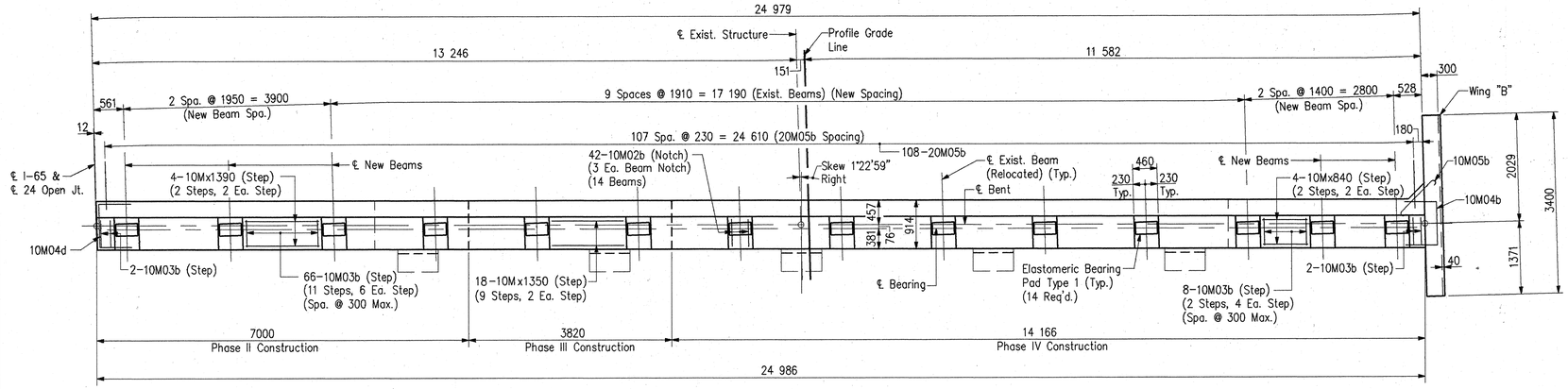

PLAN – BENT NO. 1 S.B.

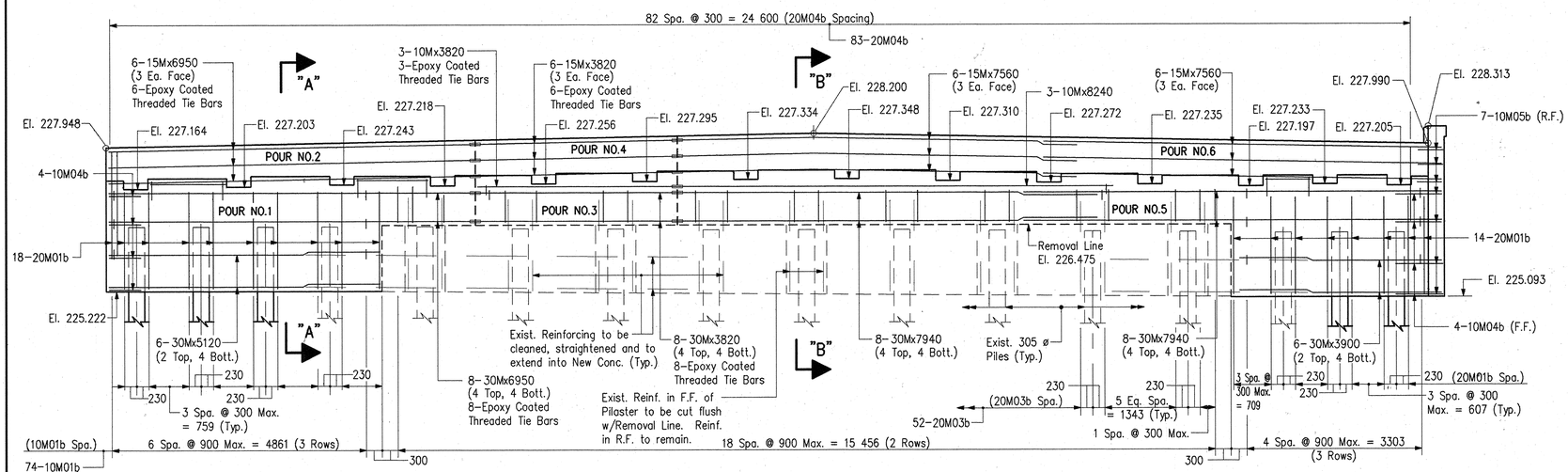

ELEVATION – BENT NO. 1 S.B.

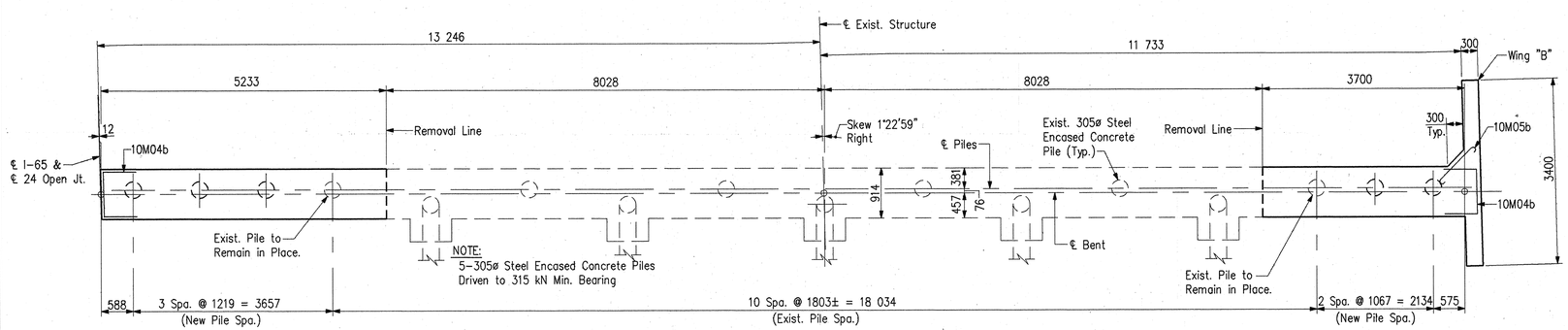

PILING PLAN – BENT NO. 1 S.B.

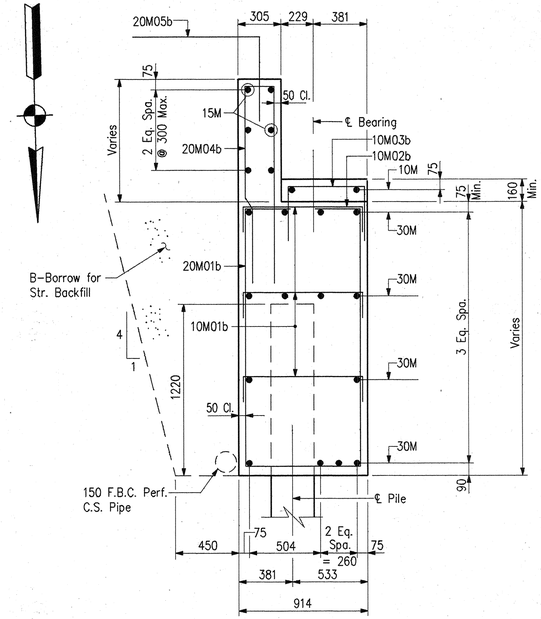

SECTION "A-A"

Scale: 1:20

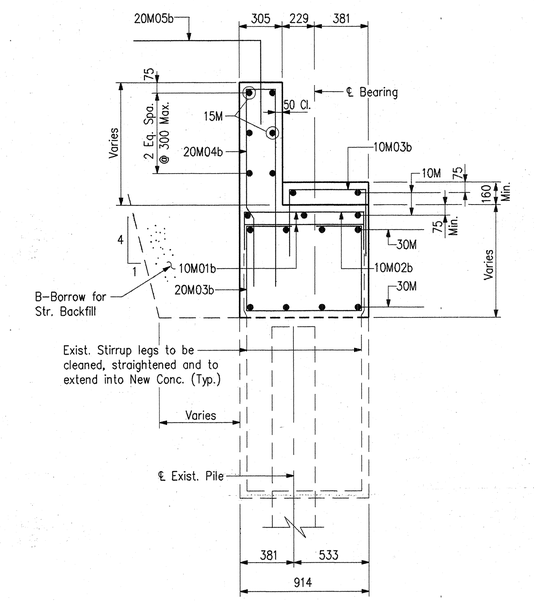

SECTION "B-B"

Scale: 1:20

NOTES:

- For General Notes, see Dwg. G2.
- For Reinforcing Bar Notes and Bar Bending Details, see Bridge Std. 703-BRST-01.
- For wingwall details, and Bar Bending Diagrams, see Dwg. G7.
- For Bill of Materials, see Dwg G7.
- Exist. Grades per Field Survey were Found to Average 0.03 m Higher than Design Grade per Project I-65-3(33)109.

DWG. G4 OF 24

DENNIS R. CLARK REGISTERED No. 17234 STATE OF INDIANA PROFESSIONAL ENGINEER

RECOMMENDED FOR APPROVAL — DESIGN ENGINEER — DATE 7-15-96

DESIGNED: DMS | DRAWN: CPM
CHECKED: DRC | CHECKED: DMS

INDIANA DEPARTMENT OF TRANSPORTATION

BENT NO. 1 S.B. DETAILS
I-65 OVER RAYMOND STREET

HORIZONTAL SCALE	BRIDGE FILE
1:50	I-65-110-5694A
VERTICAL SCALE	DESIGNATION
1:50	8462720
SURVEY BOOK	SHEETS
	127 of 301
CONTRACT	PROJECT
R-22528	IM/65-3(258)109

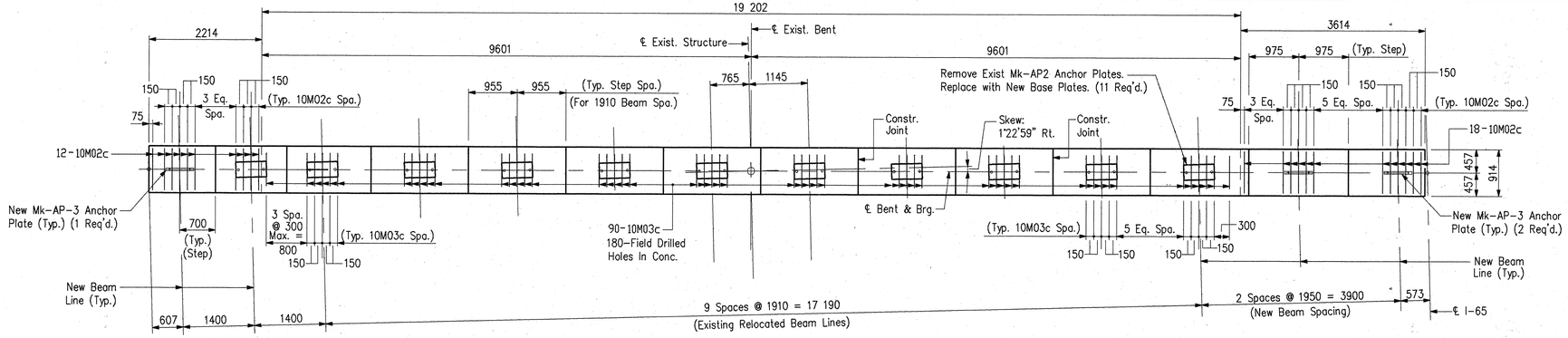

CAP PLAN

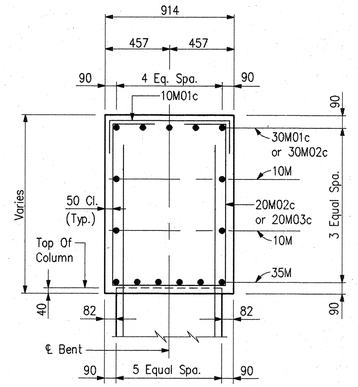

SECTION "B-B"
Scale: 1:20

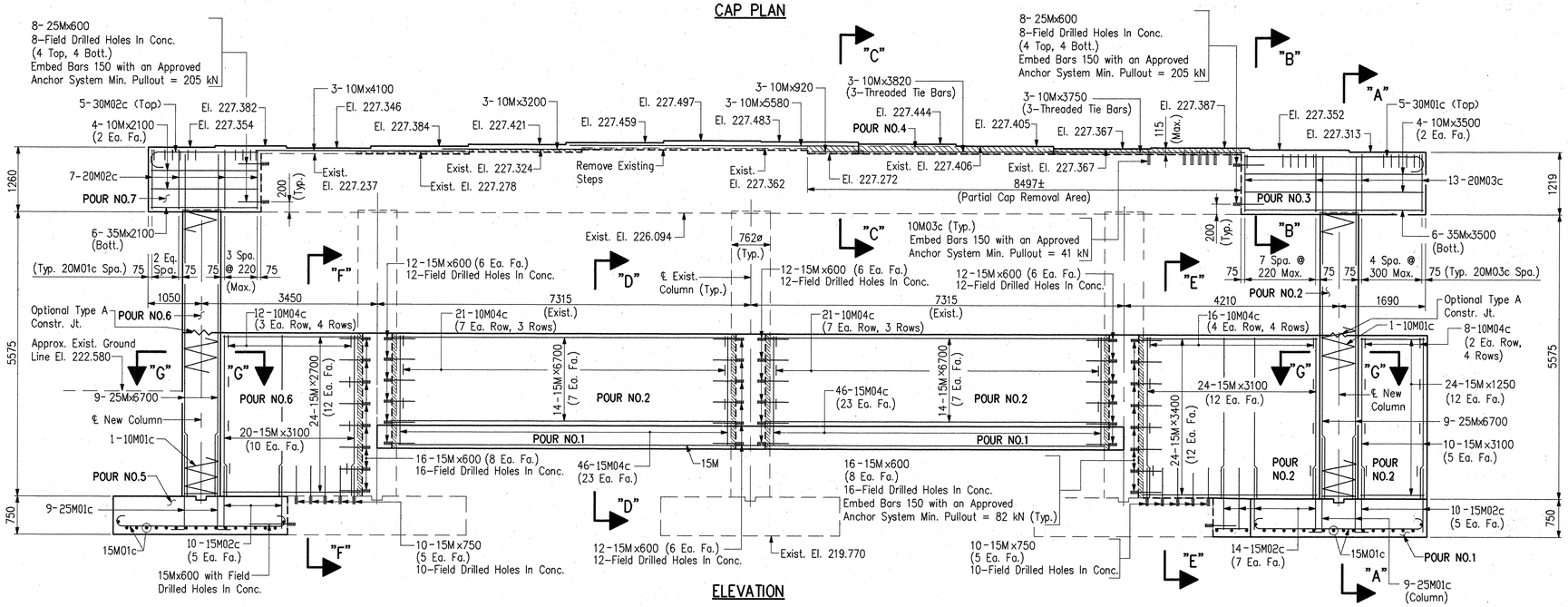

ELEVATION

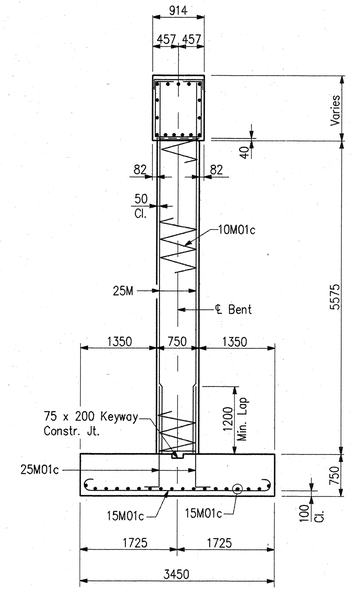

SECTION "A-A"

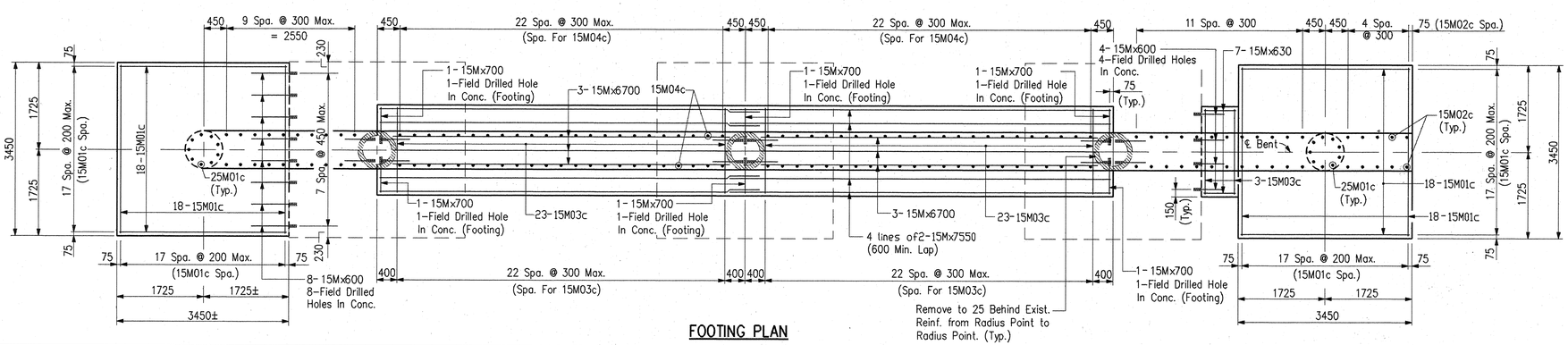

FOOTING PLAN

NOTES:

- For Reinforcing Bar Notes and Bar Bending Details, see Bridge Std. 703-BRST-01.
- For Anchor Plate Mk-AP3 Details, see Dwg. G17.
- For Bearing Details, see Dwg. G17, G18.
- For Bill of Materials, see Dwg G11.
- For Bar Bending Diagrams, see Dwg. G11.
- For Sections "C-C, "D-D", "E-E", "F-F" and "G-G", see Dwg. G11.
- Existing Grades per Field Survey were Found to Average 0.05 m Higher than Design Grade per Project I-65-3(33)109.

DWG. G5 OF 24

DENNIS R. CLARK REGISTERED No. 17234 STATE OF INDIANA PROFESSIONAL ENGINEER

RECOMMENDED FOR APPROVAL — DESIGN ENGINEER — DATE 7-15-96

DESIGNED: DMS | DRAWN: CPM
CHECKED: DRC | CHECKED: DMS

INDIANA DEPARTMENT OF TRANSPORTATION

BENT NO. 2 S.B. DETAILS
I-65 OVER RAYMOND STREET

HORIZONTAL SCALE	BRIDGE FILE
1:50	I-65-110-5694A
VERTICAL SCALE	DESIGNATION
1:50	8462720
SURVEY BOOK	SHEETS
	128 of 301
CONTRACT	PROJECT
R-22528	IM/65-3(258)109

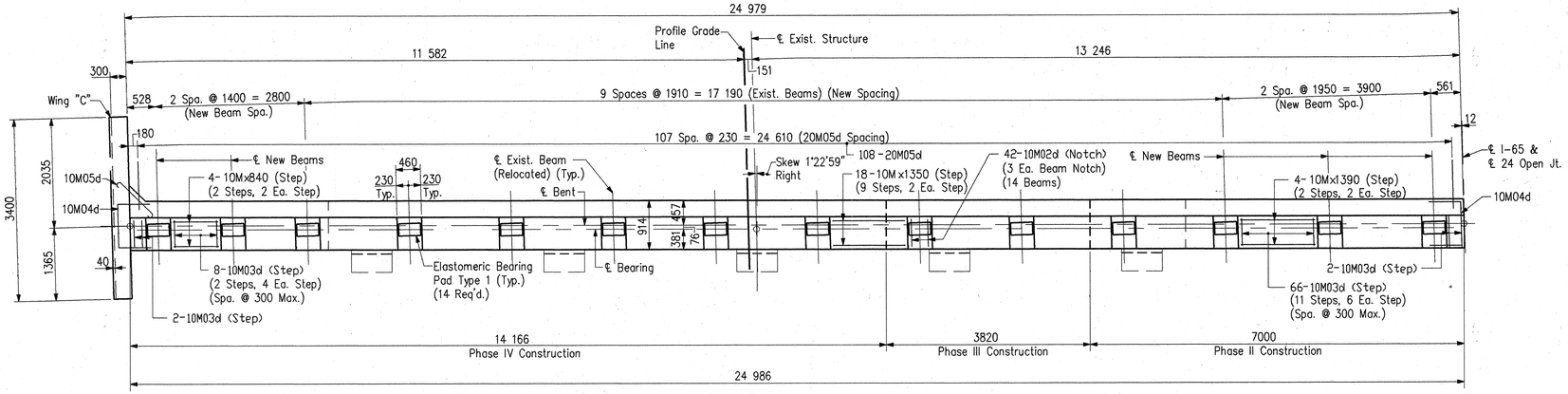

PLAN – BENT NO. 3 S.B.

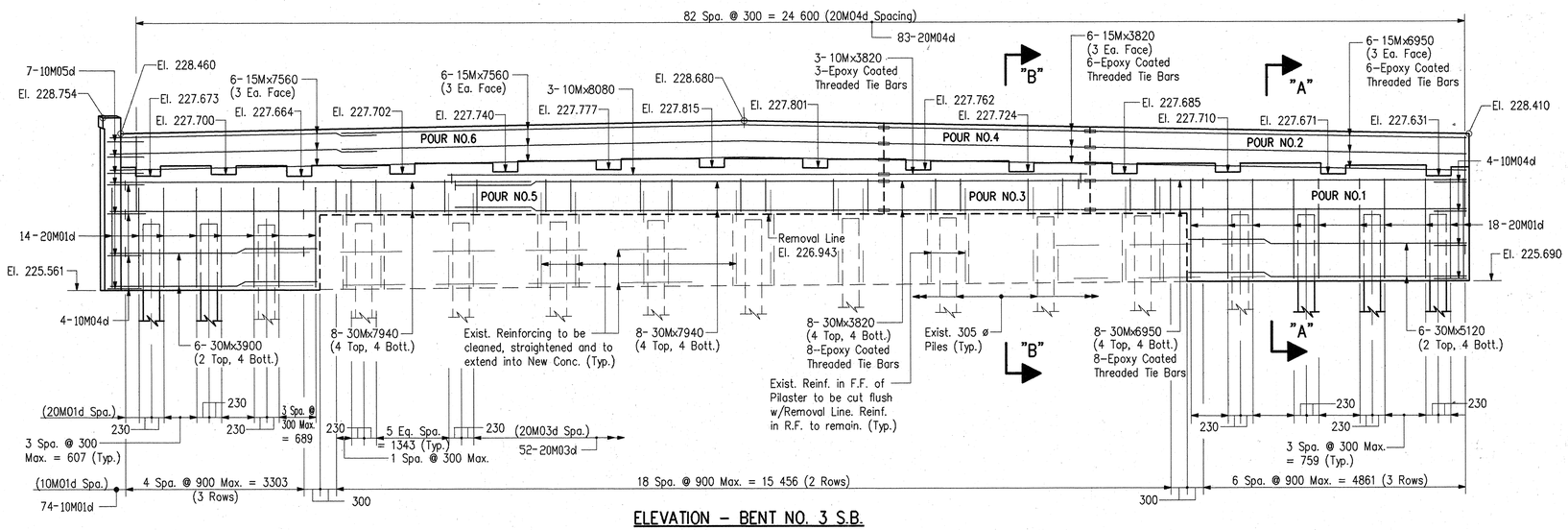

ELEVATION – BENT NO. 3 S.B.

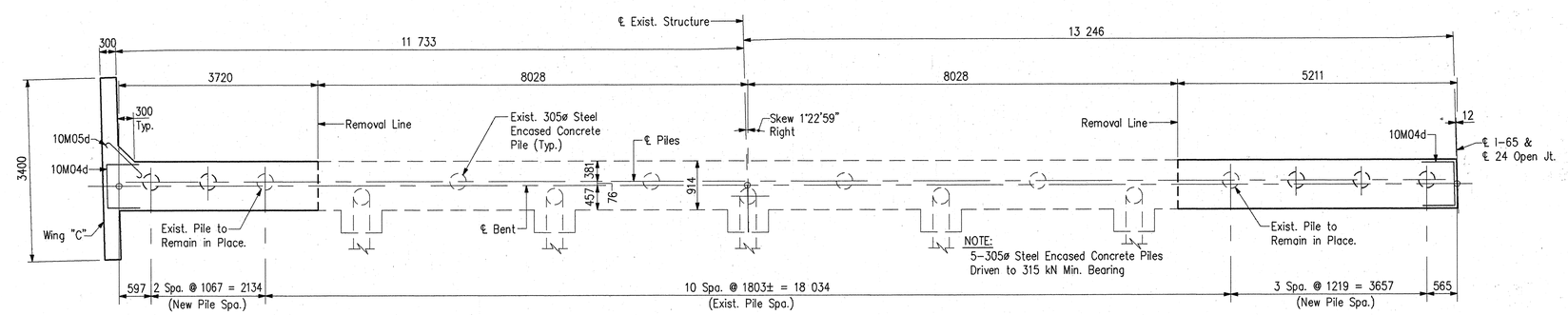

PILING PLAN – BENT NO. 3 S.B.

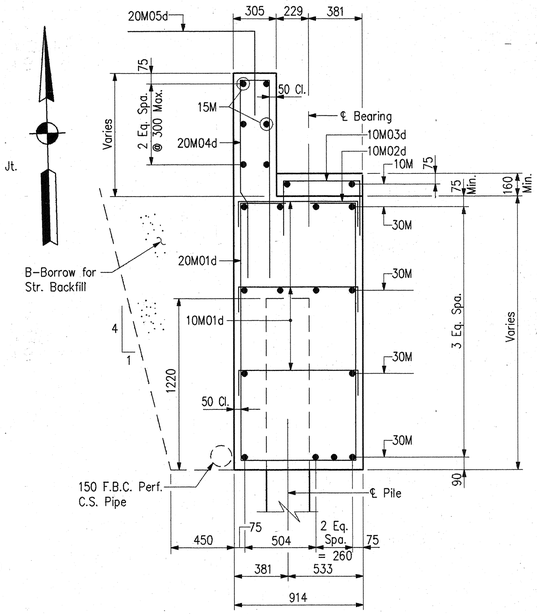

SECTION "A-A"

Scale: 1:20

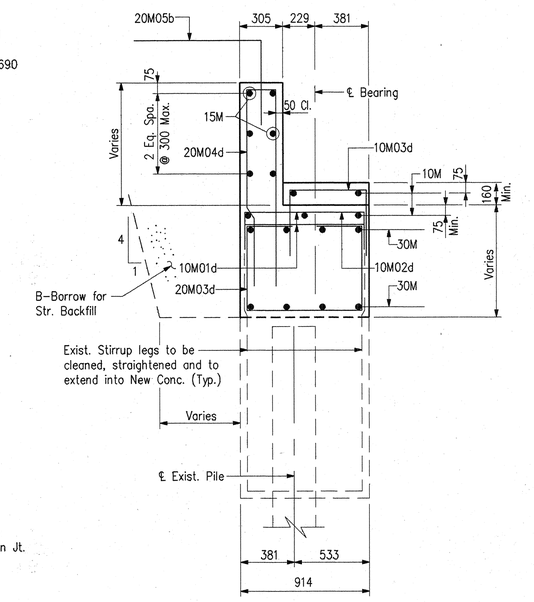

SECTION "B-B"

Scale: 1:20

NOTES:

- For General Notes, see Dwg. G2.
- For Reinforcing Bar Notes and Bar Bending Details, see Bridge Std. 703-BRST-01.
- For wingwall details, and Bar Bending Diagrams, see Dwg. G7.
- For Bill of Materials, see Dwg G7.
- Design Grades per Field Survey were Found to Average 0.03 m Higher than Design Grade per Project I-65-3(33)109.

DWG. G6 OF 24

DENNIS R. CLARK REGISTERED No. 17234 STATE OF INDIANA PROFESSIONAL ENGINEER

RECOMMENDED FOR APPROVAL Dennis R. Clark 7-15-96
DESIGN ENGINEER DATE

DESIGNED: DMS DRAWN: PCR
CHECKED: DRC CHECKED: DMS

INDIANA DEPARTMENT OF TRANSPORTATION

BENT NO. 3 S.B. DETAILS
I-65 OVER RAYMOND STREET

HORIZONTAL SCALE	BRIDGE FILE
1:50	I-65-110-5694A
VERTICAL SCALE	DESIGNATION
1:50	8462720
SURVEY BOOK	SHEETS
	129 of 301
CONTRACT	PROJECT
R-22528	IM/65-3(258)109

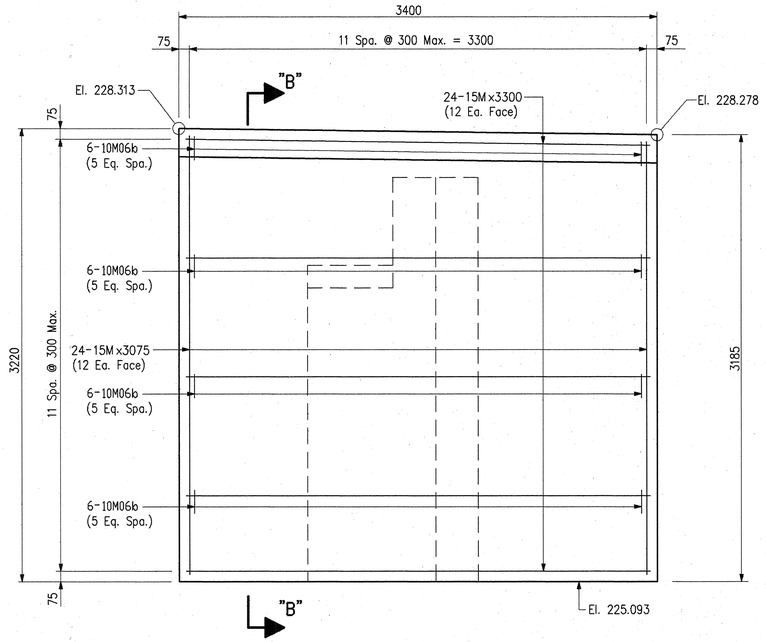

ELEVATION – WING "B"

(AT BENT NO. 1 S.B.)

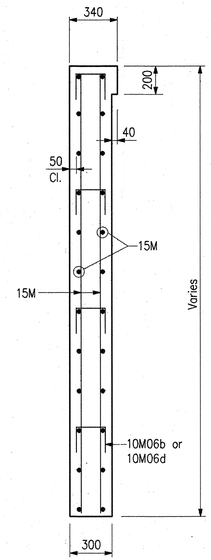

SECTION "B-B"

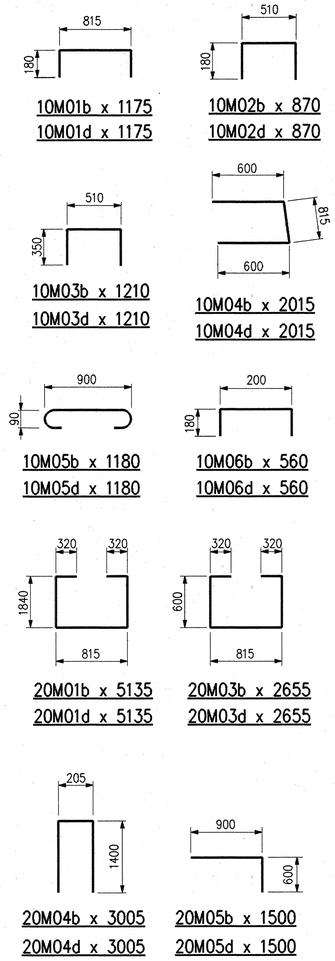

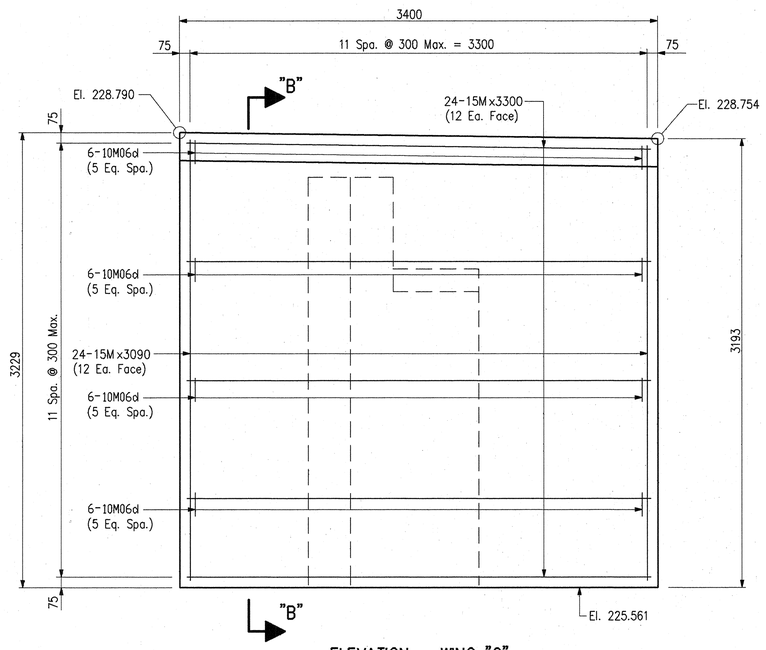

ELEVATION – WING "C"

(AT BENT NO. 3 S.B.)

BENT NO.1 SOUTHBOUND

BILL OF MATERIALS

REINFORCING STEEL			
SIZE & MARK	No. OF BARS	LENGTH	WEIGHT (Kg)
EPOXY COATED REINFORCING			
30M	16	7940mm	
30M	8	6950mm	
30M	6	5120mm	
30M	6	3900mm	
30M	8	3820mm	
TOTAL 30M BARS			1469
20M05b	108	1500mm	
20M04b	83	3005mm	
20M03b	52	2655mm	
20M01b	32	5135mm	
TOTAL 20M BARS			1680
15M	12	7560mm	
15M	6	6950mm	
15M	6	3820mm	
15M	24	3300mm	
15M	24	3075mm	
TOTAL 15M BARS			484
10M06b	24	560mm	
10M05b	7	1180mm	
10M04b	8	2015mm	
10M03b	78	1210mm	
10M02b	42	870mm	
10M01b	74	1175mm	
10M	3	8240mm	
10M	3	3820mm	
10M	4	1390mm	
10M	18	1350mm	
10M	4	840mm	
TOTAL 10M BARS			255
TOTAL EPOXY REINF.			3888

CONCRETE		
CLASS "A" IN SUBSTRUCTURE		
Pour No. 1	11.5 m^3	
Pour No. 2	1.4 m^3	
Pour No. 3	3.2 m^3	
Pour No. 4	0.8 m^3	
Pour No. 5	20.0 m^3	
Pour No. 6	3.1 m^3	
TOTAL CLASS "A" IN SUBSTRUCTURE		40.0 m^3

MISCELLANEOUS	
B-Borrow for Structure Backfill	40.7 m^3
150 F.B.C.Perf.C.S. Pipe	9.0 m
5-305ø Steel Encased Concrete Piles x 11 m	55 m
Epoxy Coated Threaded Tie Bar Assemblies	31 Ea.

BENT NO.3 SOUTHBOUND

BILL OF MATERIALS

REINFORCING STEEL			
SIZE & MARK	No. OF BARS	LENGTH	WEIGHT (Kg)
EPOXY COATED REINFORCING			
30M	16	7940mm	
30M	8	6950mm	
30M	6	5120mm	
30M	6	3900mm	
30M	8	3820mm	
TOTAL 30M BARS			1469
20M05d	108	1500mm	
20M04d	83	3005mm	
20M03d	52	2655mm	
20M01d	32	5135mm	
TOTAL 20M BARS			1680
15M	12	7560mm	
15M	6	6950mm	
15M	6	3820mm	
15M	24	3300mm	
15M	24	3090mm	
TOTAL 15M BARS			485
10M06d	24	560mm	
10M05d	7	1180mm	
10M04d	8	2015mm	
10M03d	78	1210mm	
10M02d	42	870mm	
10M01d	74	1175mm	
10M	3	8080mm	
10M	3	3820mm	
10M	4	1390mm	
10M	18	1350mm	
10M	4	840mm	
TOTAL 10M BARS			255
TOTAL EPOXY REINF.			3889

CONCRETE		
CLASS "A" IN SUBSTRUCTURE		
Pour No. 1	11.5 m^3	
Pour No. 2	1.4 m^3	
Pour No. 3	3.2 m^3	
Pour No. 4	0.8 m^3	
Pour No. 5	20.1 m^3	
Pour No. 6	3.1 m^3	
TOTAL CLASS "A" IN SUBSTRUCTURE		40.1 m^3

MISCELLANEOUS	
B-Borrow for Structure Backfill	49.4 m^3
150 F.B.C.Perf.C.S. Pipe	9.0 m
5-305ø Steel Encased Concrete Piles x 11 m	55 m
Epoxy Coated Threaded Tie Bar Assemblies	31 Ea.

NOTES:

- For Reinforcing Bar Notes and Bar Bending Details, see Std. 703-BRST-01.
- For Bridge Floor Details, see Dwg. G19.
- For General Notes, see Dwg. G1.
- Exist. Grades per Field Survey were Found to Average 0.03 m Higher than Design Grade per Project I-65-3(33)109.

DENNIS R. CLARK REGISTERED No. 17234 STATE OF INDIANA PROFESSIONAL ENGINEER

RECOMMENDED FOR APPROVAL — DESIGN ENGINEER — 7-15-96 DATE

DESIGNED: DMS | DRAWN: CPM

CHECKED: DRC | CHECKED: DRC

INDIANA DEPARTMENT OF TRANSPORTATION

BENT NO. 1 & 3 SOUTHBOUND DETAILS
I-65 OVER RAYMOND STREET

HORIZONTAL SCALE	BRIDGE FILE
1:20	I-65-110-5694A
VERTICAL SCALE	DESIGNATION
1:20	8462720
SURVEY BOOK	SHEETS
	130 of 301
CONTRACT	PROJECT
R-22528	IM/65-3(258)109

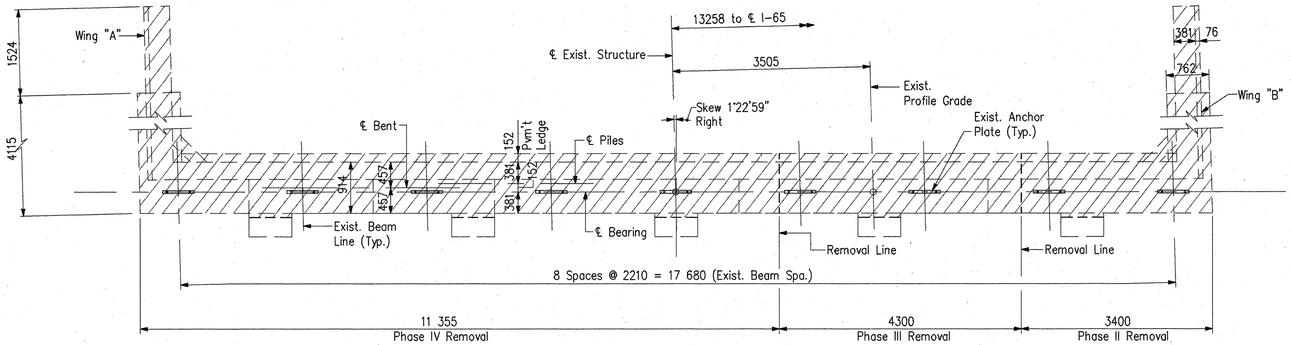

PLAN – BENT NO. 1 N.B.

(Showing Limits of Removal)

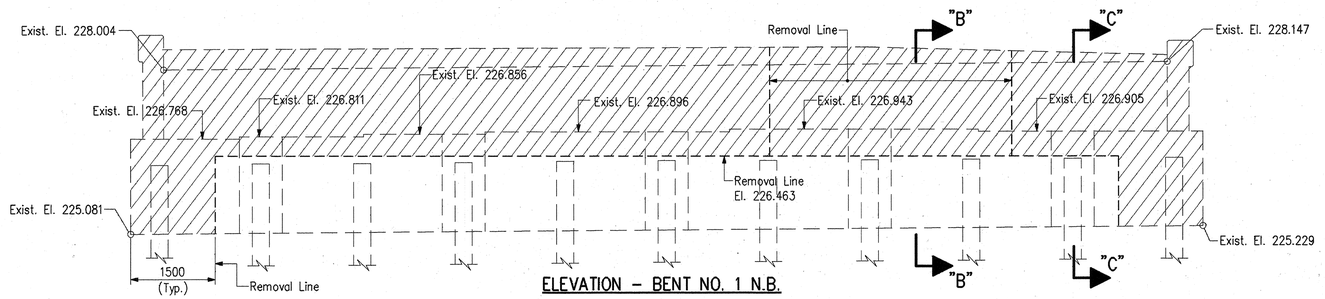

ELEVATION – BENT NO. 1 N.B.

(Showing Limits of Removal)

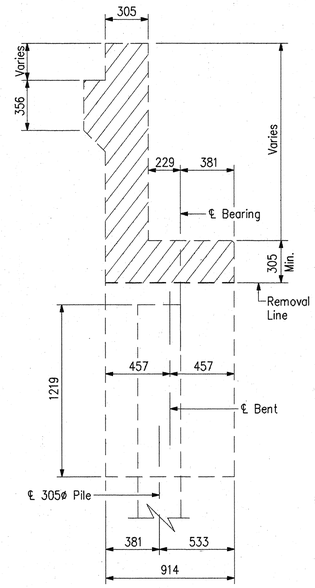

SECTION "B-B"

Scale: 1:20

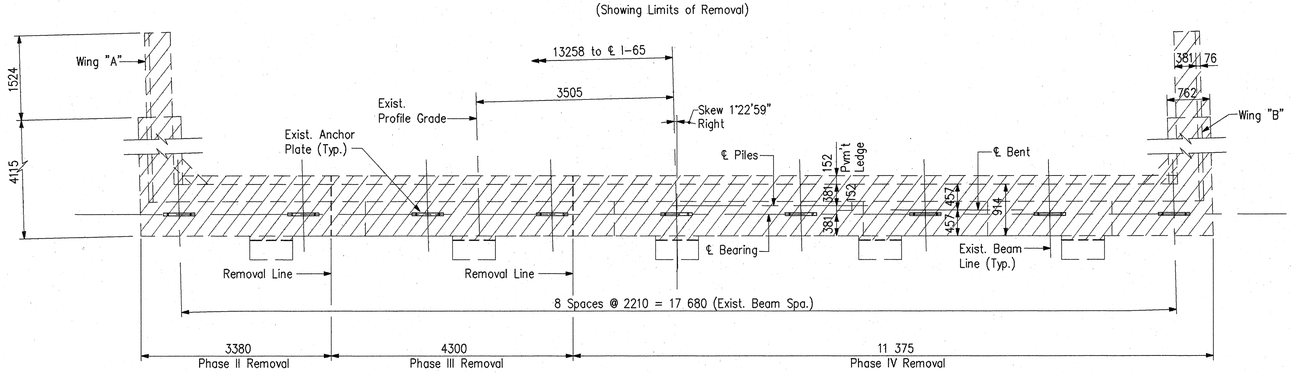

PLAN – BENT NO. 3 N.B.

(Showing Limits of Removal)

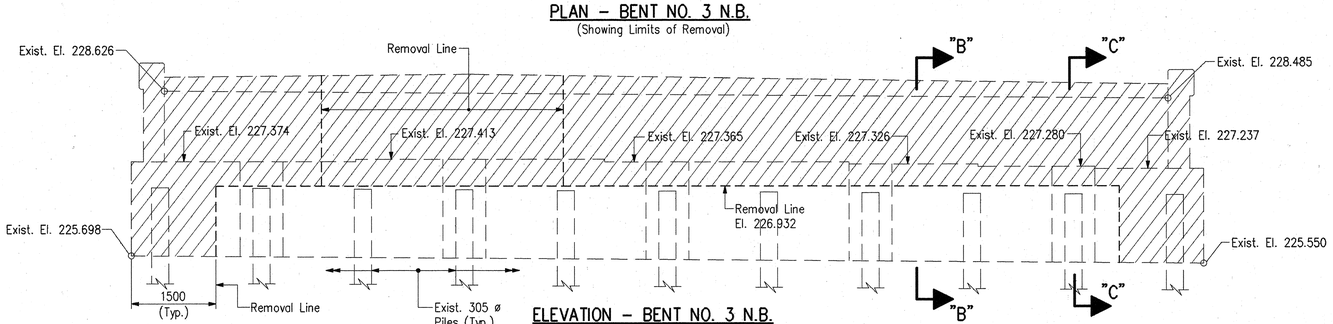

ELEVATION – BENT NO. 3 N.B.

(Showing Limits of Removal)

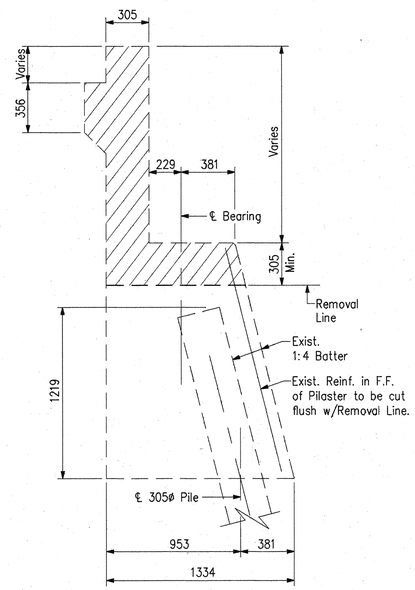

SECTION "C-C"

Scale: 1:20

NOTES:

- For General Notes, see Dwg. G2.
- For Wingwall Removal Details, See Dwg G3.
- For Bent No. 1 N.B. & 3 N.B. reconstruction Details, see Dwg. G9, G12 and G13
- Existing Grades per Field Survey were found to average 0.05 m higher than Design Grade per Project I-65-3(33)109.

Indicates Removal Areas

DWG. G8 of 24

DENNIS R. CLARK REGISTERED No. 17234 STATE OF INDIANA PROFESSIONAL ENGINEER

RECOMMENDED FOR APPROVAL Dennis R. Clark 7-15-96
DESIGN ENGINEER DATE

DESIGNED: DMS DRAWN: PCR
CHECKED: DRC CHECKED: DMS

INDIANA DEPARTMENT OF TRANSPORTATION

BENT NO. 1 & 3 N.B. REMOVAL DETAILS
I-65 OVER RAYMOND STREET

HORIZONTAL SCALE	BRIDGE FILE
1:50	I-65-110-5694A
VERTICAL SCALE	DESIGNATION
1:50	8462720
SURVEY BOOK	SHEETS
	131 of 301
CONTRACT	PROJECT
R-22528	IM/65-3(258)109

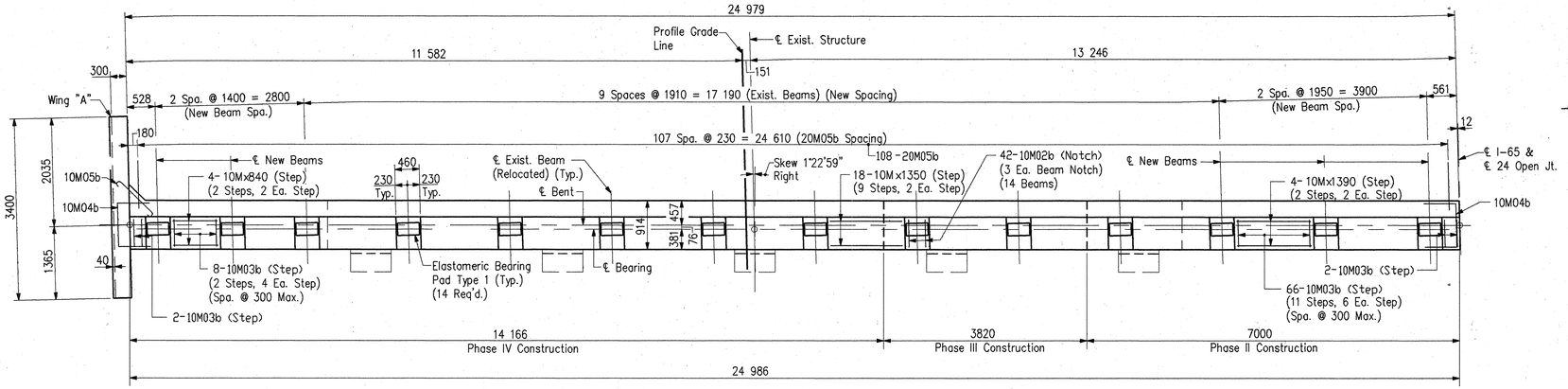

PLAN – BENT NO. 1 N.B.

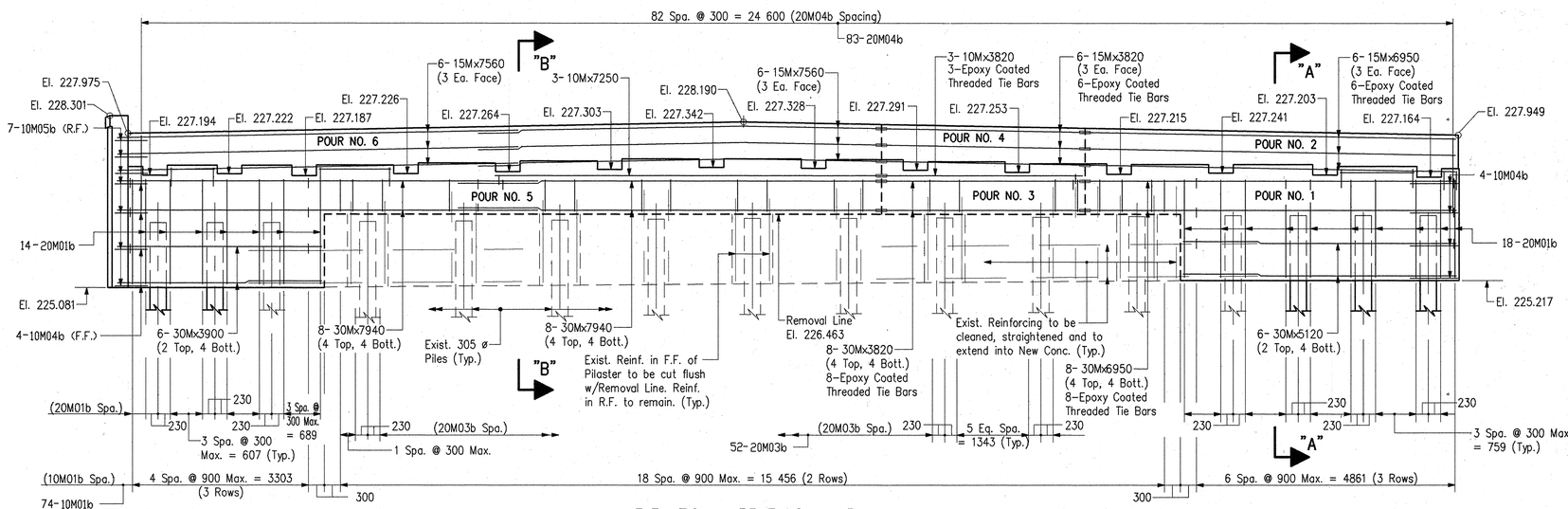

ELEVATION – BENT NO. 1 N.B.

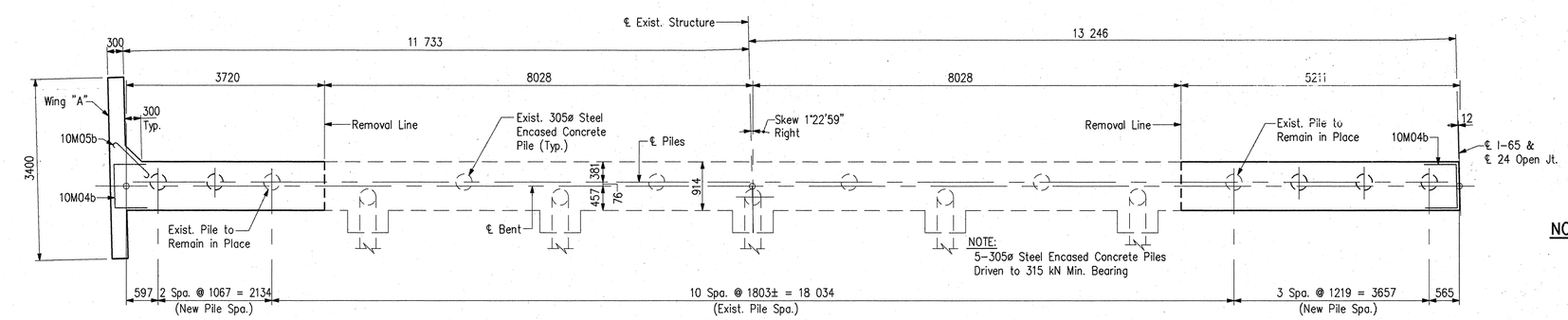

PILING PLAN – BENT NO. 1 N.B.

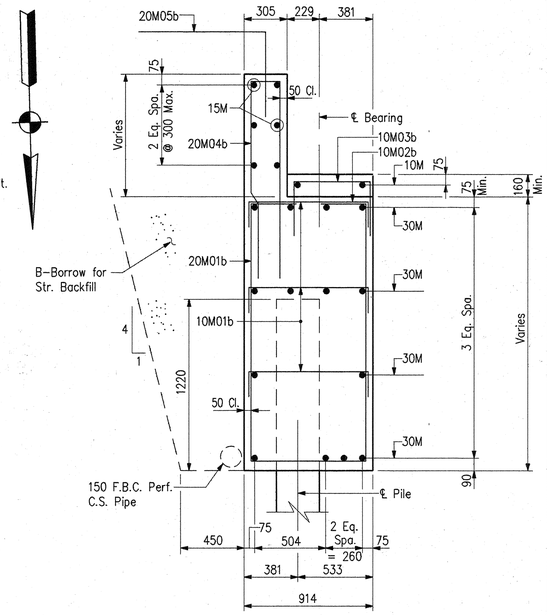

SECTION "A-A"

Scale: 1:20

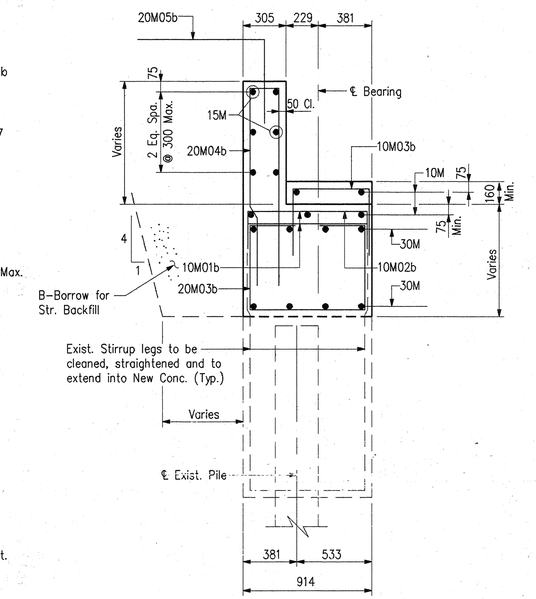

SECTION "B-B"

Scale: 1:20

NOTES:

- For Reinforcing Bar Notes and Bar Bending Details, see Bridge Std. 703-BRST-01.
- For wingwall details, and Bar Bending Diagrams, see Dwg. G13.
- For Bill of Materials, see Dwg G13.
- For General Notes, see Dwg. G2.
- Min. Lap for 15M = 750, 30M = 1500.
- Exist. Grades per Field Survey were Found to Average 0.03 m Higher than Design Grade per Project I-65-3(33)109.

DWG. G9 OF 24

DENNIS R. CLARK REGISTERED No. 17234 STATE OF INDIANA PROFESSIONAL ENGINEER

RECOMMENDED FOR APPROVAL Dennis R. Clark 7-15-96
DESIGN ENGINEER DATE

DESIGNED: DMS DRAWN: PCR
CHECKED: DRC CHECKED: DMS

INDIANA DEPARTMENT OF TRANSPORTATION

BENT NO. 1 N.B. DETAILS
I-65 OVER RAYMOND STREET

HORIZONTAL SCALE	BRIDGE FILE
1:50	I-65-110-5694A
VERTICAL SCALE	DESIGNATION
1:50	8462720
SURVEY BOOK	SHEETS
	132 of 301
CONTRACT	PROJECT
R-22528	IM/65-3(258)109

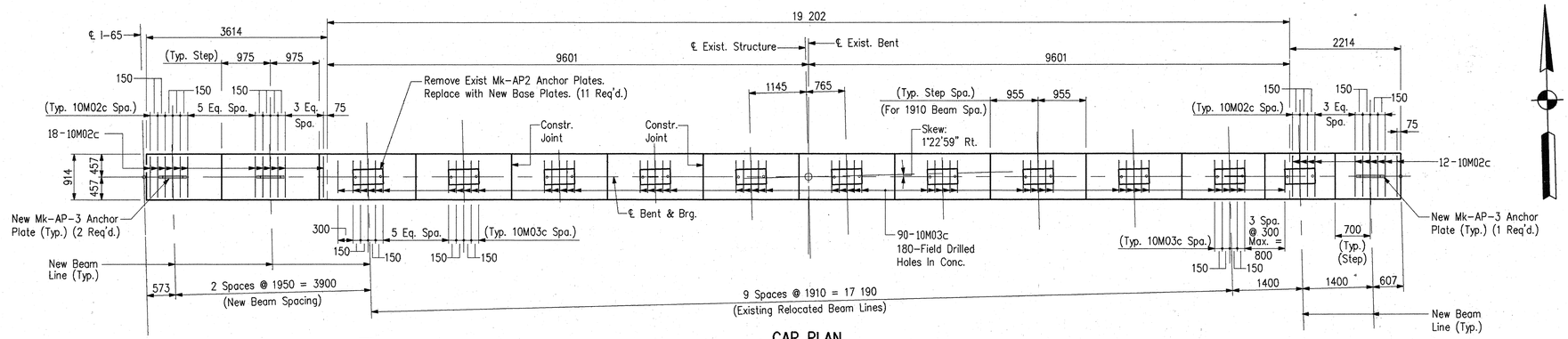

CAP PLAN

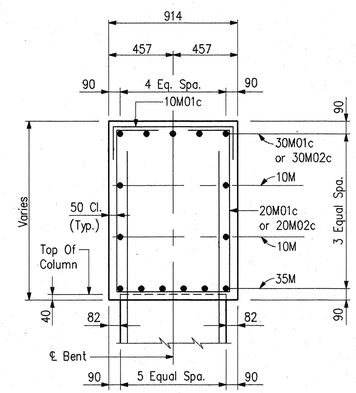

SECTION "B-B"

Scale: 1:20

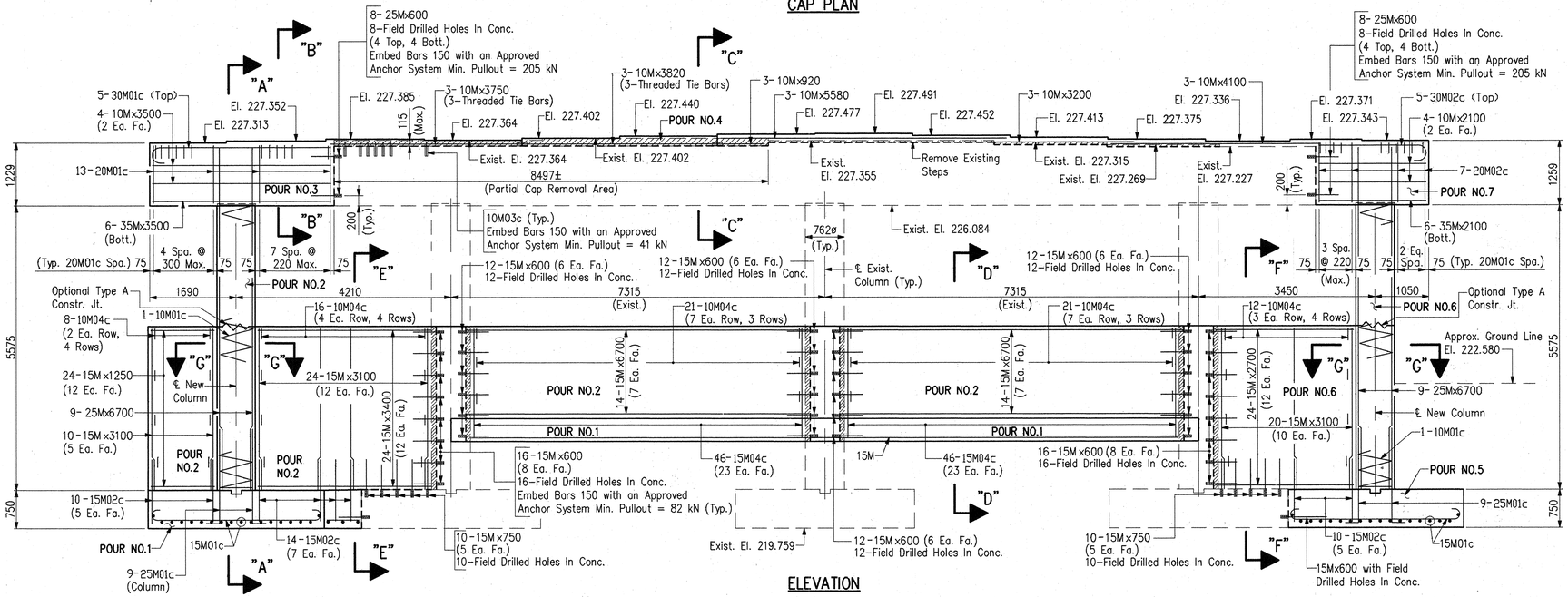

ELEVATION

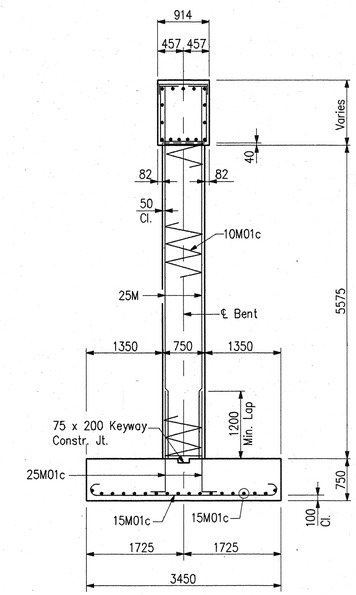

SECTION "A-A"

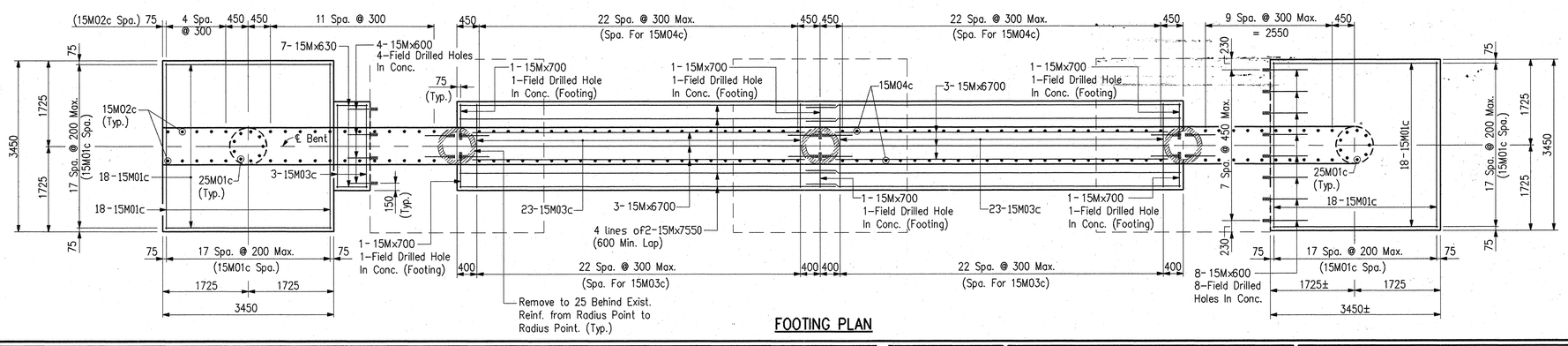

FOOTING PLAN

NOTES:

- For Reinforcing Bar Notes and Bar Bending Details, see Bridge Std. 703-BRST-01.
- For Anchor Plate Mk-AP3 Details, see Dwg. G17.
- For Bearing Details, see Dwgs. G17, G18.
- For Bill of Materials, see Dwg G11.
- For Bar Bending Diagrams, see Dwg. G11.
- For Sections "C-C, "D-D", "E-E", "F-F" and "G-G", see Dwg. G11.
- Existing Grades per Field Survey were Found to Average 0.05 m Higher than Design Grade per Project I-65-3(33)109.

DWG. G10 OF 24

DENNIS R. CLARK REGISTERED No. 17234 STATE OF INDIANA PROFESSIONAL ENGINEER

RECOMMENDED FOR APPROVAL — DESIGN ENGINEER — DATE 7-15-96

DESIGNED: DMS | DRAWN: CPM
CHECKED: DRC | CHECKED: DMS

INDIANA DEPARTMENT OF TRANSPORTATION

BENT NO. 2 N.B. DETAILS
I-65 OVER RAYMOND STREET

HORIZONTAL SCALE	BRIDGE FILE
1:50	I-65-110-5694A
VERTICAL SCALE	DESIGNATION
1:50	8462720
SURVEY BOOK	SHEETS
	133 of 301
CONTRACT	PROJECT
R-22528	IM/65-3(258)109

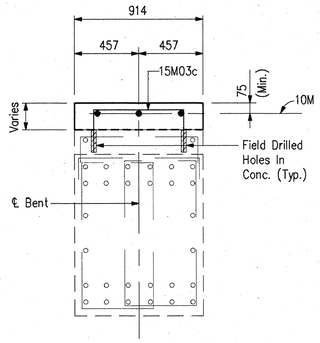

SECTION "C-C"
Scale: 1:20

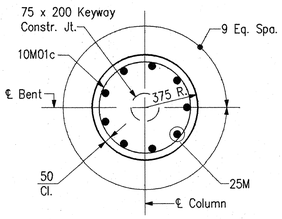

SECTION "G-G"
Scale: 1:20

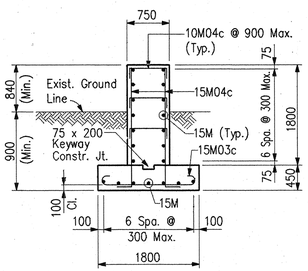

SECTION "D-D"
Scale: 1:20

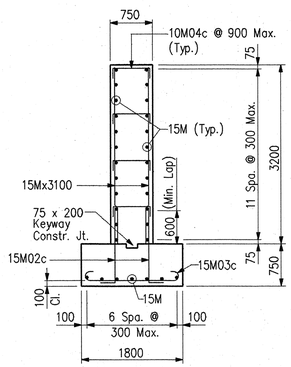

SECTION "E-E"
Scale: 1:20

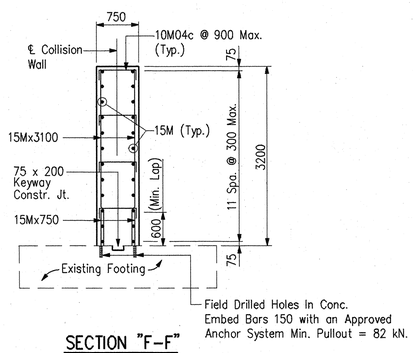

SECTION "F-F"
Scale: 1:20

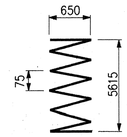

10M01c x 153095

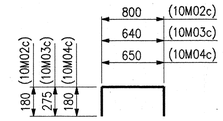

10M02c x 1160
10M03c x 1190
10M04c x 1010

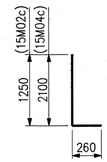

15M02c x 1510
15M04c x 2360

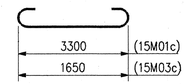

15M01c x 3660
15M03c x 2010

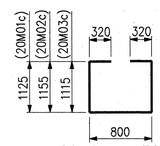

20M01c x 3690
20M02c x 3750
20M03c x 3670

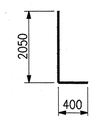

25M01c x 2450

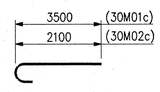

30M01c x 3900
30M02c x 2500

BENT NO.2 NORTHBOUND BILL OF MATERIALS

REINFORCING STEEL			
SIZE & MARK	No. OF BARS	LENGTH	WEIGHT (Kg)
PLAIN REINFORCING			
35M	6	3500mm	
35M	6	2100mm	
TOTAL 35M BARS			264
30M01c	5	3900mm	
30M02c	5	2500mm	
TOTAL 30M BARS			176
25M01c	18	2450mm	
25M	18	6700mm	
25M	16	600mm	
TOTAL 25M BARS			684
20M02c	7	3750mm	
20M01c	13	3690mm	
TOTAL 20M BARS			175
15M04c	92	2360mm	
15M03c	49	2010mm	
15M02c	34	1510mm	
15M01c	72	3660mm	
15M	8	7550mm	
15M	34	6700mm	
15M	24	3400mm	
15M	54	3100mm	
15M	24	2700mm	
15M	24	1250mm	
15M	20	750mm	
15M	6	700mm	
15M	7	630mm	
15M	92	600mm	
TOTAL 15M BARS			2106
10M04c	78	1010mm	
10M03c	90	1190mm	
10M02c	30	1160mm	
10M01c	2	153095mm	
10M	3	5580mm	
10M	3	4100mm	
10M	3	3820mm	
10M	3	3750mm	
10M	4	3500mm	
10M	3	3200mm	
10M	4	2100mm	
10M	3	920mm	
TOTAL 10M BARS			482
TOTAL PLAIN REINF.			3887

CONCRETE		
CLASS "B" IN FOOTING		
Pour No. 1	21.5 m³	
Pour No. 5	8.9 m³	
TOTAL CLASS "B" IN FOOTING		30.4 m³
CLASS "A" IN SUBSTRUCTURE		
Pour No. 2	33.2 m³	
Pour No. 3	4.6 m³	
Pour No. 4	0.6 m³	
Pour No. 6	9.5 m³	
Pour No. 7	4.2 m³	
TOTAL CLASS "A" IN SUBSTRUCTURE		52.1 m³

MISCELLANEOUS	
Anchor Plate MK-AP3	3 Ea.
Field Drilled Holes In Conc.	296 Ea.
Foundation Excavation (Unclassified)	157.3 m³
"B" Borrow For Structure Backfill	108.8 m³
Threaded Tie Bars	6 Ea.

BENT NO.2 SOUTHBOUND BILL OF MATERIALS

REINFORCING STEEL			
SIZE & MARK	No. OF BARS	LENGTH	WEIGHT (Kg)
PLAIN REINFORCING			
35M	6	3500mm	
35M	6	2100mm	
TOTAL 35M BARS			264
30M01c	5	3900mm	
30M02c	5	2500mm	
TOTAL 30M BARS			176
25M01c	18	2450mm	
25M	18	6700mm	
25M	16	600mm	
TOTAL 25M BARS			684
20M02c	7	3750mm	
20M03c	13	3670mm	
TOTAL 20M BARS			174
15M04c	92	2360mm	
15M03c	49	2010mm	
15M02c	34	1510mm	
15M01c	72	3660mm	
15M	8	7550mm	
15M	34	6700mm	
15M	24	3400mm	
15M	54	3100mm	
15M	24	2700mm	
15M	24	1250mm	
15M	20	750mm	
15M	6	700mm	
15M	7	630mm	
15M	92	600mm	
TOTAL 15M BARS			2106
10M04c	78	1010mm	
10M03c	90	1190mm	
10M02c	30	1160mm	
10M01c	2	153095mm	
10M	3	5580mm	
10M	3	4100mm	
10M	3	3820mm	
10M	3	3750mm	
10M	4	3500mm	
10M	3	3200mm	
10M	4	2100mm	
10M	3	920mm	
TOTAL 10M BARS			482
TOTAL PLAIN REINF.			3886

CONCRETE		
CLASS "B" IN FOOTING		
Pour No. 1	21.5 m³	
Pour No. 5	8.9 m³	
TOTAL CLASS "B" IN FOOTING		30.4 m³
CLASS "A" IN SUBSTRUCTURE		
Pour No. 2	33.2 m³	
Pour No. 3	4.6 m³	
Pour No. 4	0.6 m³	
Pour No. 6	9.5 m³	
Pour No. 7	4.2 m³	
TOTAL CLASS "A" IN SUBSTRUCTURE		52.1 m³

MISCELLANEOUS	
Anchor Plate MK-AP3	3 Ea.
Field Drilled Holes In Conc.	296 Ea.
Foundation Excavation (Unclassified)	156.4 m³
"B" Borrow For Structure Backfill	110.1 m³
Threaded Tie Bars	6 Ea.

NOTES:

- For Location of Section "C-C", "D-D", "E-E", "F-F" and "G-G", see Dwg. G10.

DENNIS R. CLARK REGISTERED No. 17234 STATE OF INDIANA PROFESSIONAL ENGINEER

RECOMMENDED FOR APPROVAL Dennis R. Clark 7-15-96
DESIGN ENGINEER DATE

DESIGNED: DMS DRAWN: CPM
CHECKED: DRC CHECKED: DMS

INDIANA DEPARTMENT OF TRANSPORTATION

BENT NO. 2 S.B. & N.B. DETAILS
I-65 OVER RAYMOND STREET

HORIZONTAL SCALE	BRIDGE FILE
1:50	I-65-110-5694A
VERTICAL SCALE	DESIGNATION
1:50	8462720
SURVEY BOOK	SHEETS
	134 of 301
CONTRACT	PROJECT
R-22528	IM/65-3(258)109

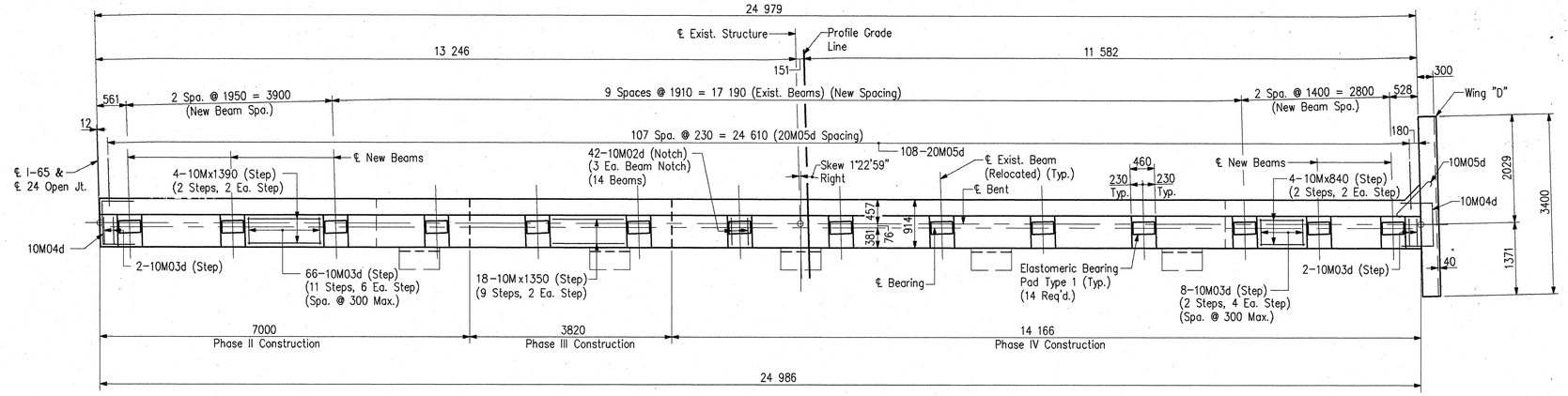

PLAN - BENT NO. 3 N.B.

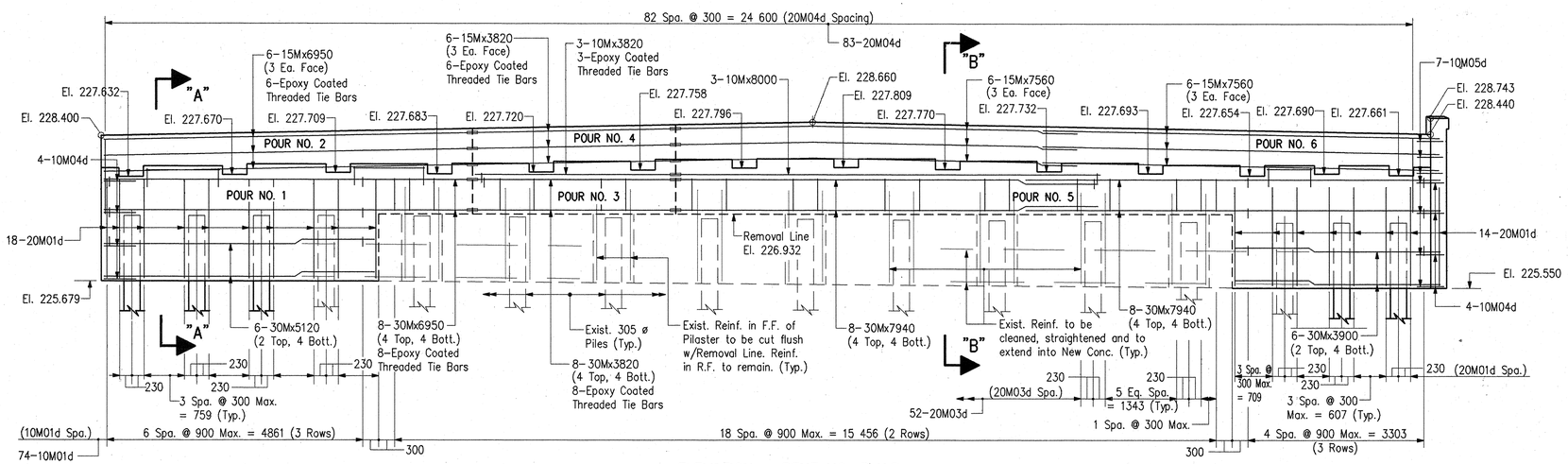

ELEVATION - BENT NO. 3 N.B.

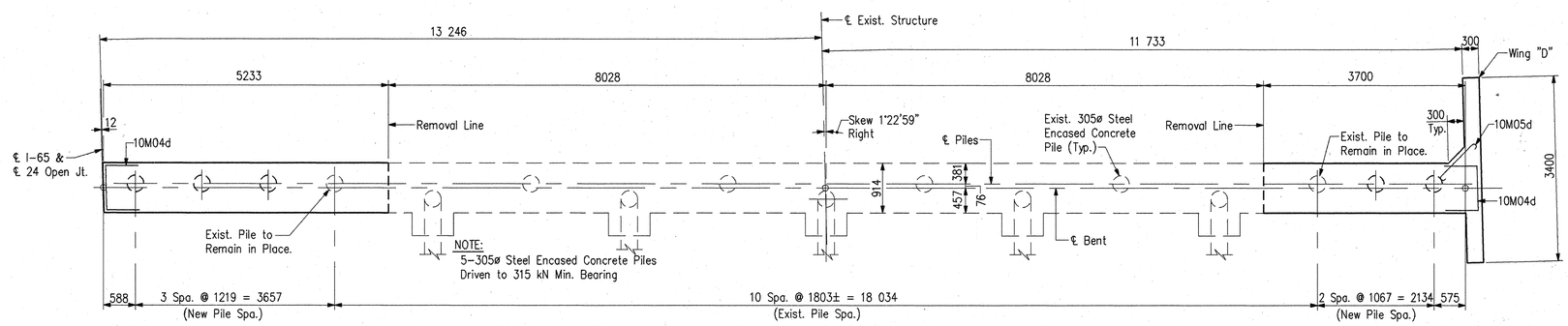

PILING PLAN - BENT NO. 3 N.B.

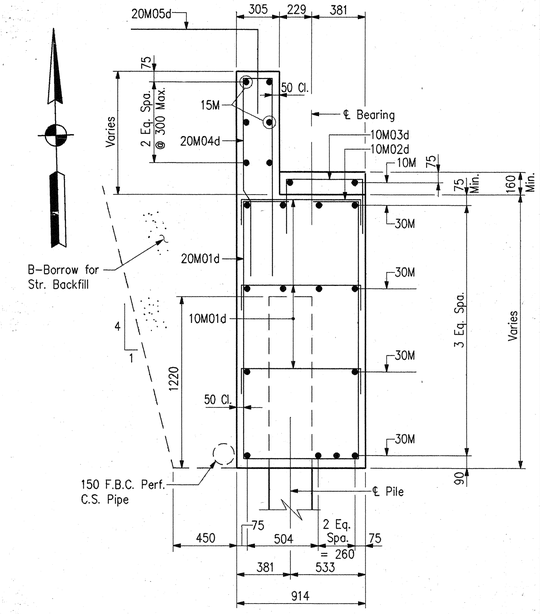

SECTION "A-A"

Scale: 1:20

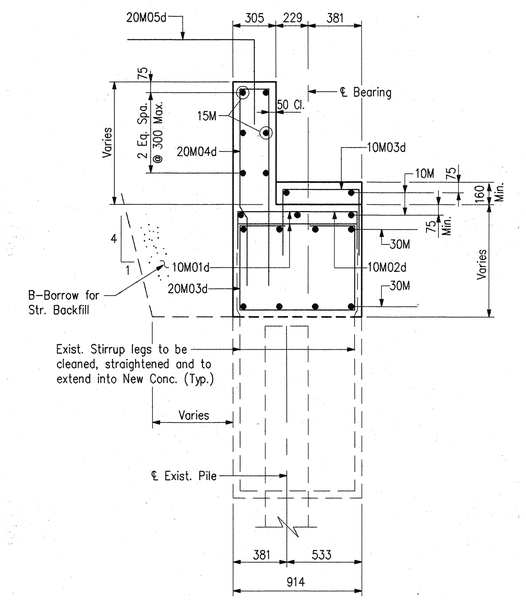

SECTION "B-B"

Scale: 1:20

NOTES:

- For General Notes, see Dwg. G2.
- For Reinforcing Bar Notes and Bar Bending Details, see Bridge Std. 703-BRST-01.
- For wingwall details, and Bar Bending Diagrams, see Dwg. G13.
- For Bill of Materials, see Dwg G13.
- Exist. Grades per Field Survey were Found to Average 0.03 m Higher than Design Grade per Project I-65-3(33)109.

DWG. G12 OF 24

DENNIS R. CLARK REGISTERED No. 17234 STATE OF INDIANA PROFESSIONAL ENGINEER

RECOMMENDED FOR APPROVAL Dennis R. Clark 7-15-96
DESIGN ENGINEER DATE

DESIGNED: DMS DRAWN: PCR
CHECKED: DRC CHECKED: DMS

INDIANA DEPARTMENT OF TRANSPORTATION

BENT NO. 3 N.B. DETAILS
I-65 OVER RAYMOND STREET

HORIZONTAL SCALE	BRIDGE FILE
1:50	I-65-110-5694A
VERTICAL SCALE	DESIGNATION
1:50	8462720
SURVEY BOOK	SHEETS
	135 of 301
CONTRACT	PROJECT
R-22528	IM/65-3(258)109

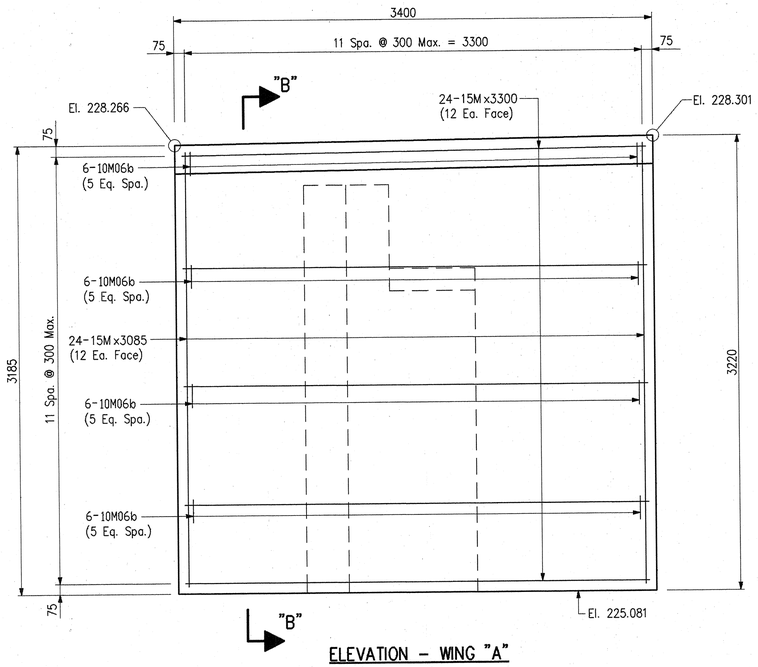

ELEVATION – WING "A"

(AT BENT NO. 1 N.B.)

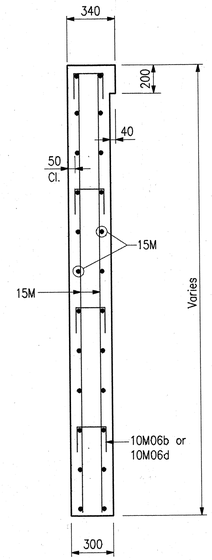

SECTION "B-B"

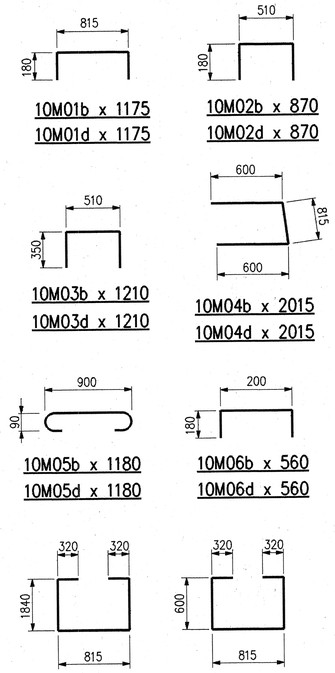

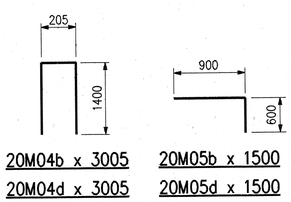

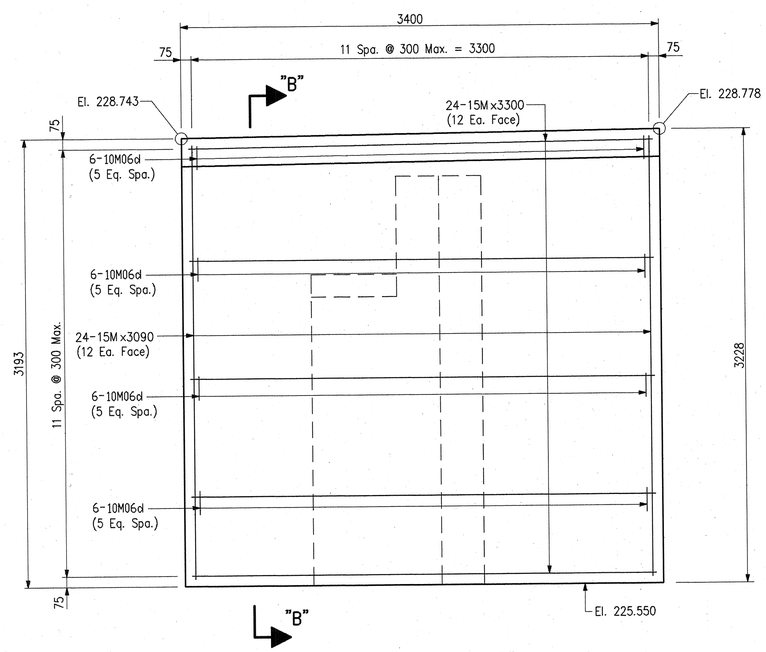

ELEVATION – WING "D"

(AT BENT NO. 3 N.B.)

BENT NO.1 NORTHBOUND

BILL OF MATERIALS

REINFORCING STEEL			
SIZE & MARK	No. OF BARS	LENGTH	WEIGHT (Kg)
EPOXY COATED REINFORCING			
30M	16	7940mm	
30M	8	6950mm	
30M	6	5120mm	
30M	6	3900mm	
30M	8	3820mm	
TOTAL 30M BARS			1469
20M05b	108	1500mm	
20M04b	83	3005mm	
20M03b	52	2655mm	
20M01b	32	5135mm	
TOTAL 20M BARS			1680
15M	12	7560mm	
15M	6	6950mm	
15M	6	3820mm	
15M	24	3300mm	
15M	24	3085mm	
TOTAL 15M BARS			484
10M06b	24	560mm	
10M05b	7	1180mm	
10M04b	8	2015mm	
10M03b	78	1210mm	
10M02b	42	870mm	
10M01b	74	1175mm	
10M	3	7250mm	
10M	3	3820mm	
10M	4	1390mm	
10M	18	1350mm	
10M	4	840mm	
TOTAL 10M BARS			253
TOTAL EPOXY REINF.			3886

CONCRETE	
CLASS "A" IN SUBSTRUCTURE	
Pour No. 1	11.5 m^3
Pour No. 2	1.4 m^3
Pour No. 3	3.3 m^3
Pour No. 4	0.8 m^3
Pour No. 5	21.8 m^3
Pour No. 6	3.0 m^3
TOTAL CLASS "A" IN SUBSTRUCTURE	41.8 m^3

MISCELLANEOUS	
B-Borrow for Structure Backfill	38.6 m^3
150 F.B.C.Perf.C.S. Pipe	9.0 m
5-305ø Steel Encased Concrete Piles x 11 m	55 m
Epoxy Coated Threaded Tie Bar Assemblies	31 Ea.

BENT NO.3 NORTHBOUND

BILL OF MATERIALS

REINFORCING STEEL			
SIZE & MARK	No. OF BARS	LENGTH	WEIGHT (Kg)
EPOXY COATED REINFORCING			
30M	16	7940mm	
30M	8	6950mm	
30M	6	5120mm	
30M	6	3900mm	
30M	8	3820mm	
TOTAL 30M BARS			1469
20M05d	108	1500mm	
20M04d	83	3005mm	
20M03d	52	2655mm	
20M01d	32	5135mm	
TOTAL 20M BARS			1680
15M	12	7560mm	
15M	6	6950mm	
15M	6	3820mm	
15M	24	3300mm	
15M	24	3090mm	
TOTAL 15M BARS			485
10M06d	24	560mm	
10M05d	7	1180mm	
10M04d	8	2015mm	
10M03d	78	1210mm	
10M02d	42	870mm	
10M01d	74	1175mm	
10M	3	8000mm	
10M	3	3820mm	
10M	4	1390mm	
10M	18	1350mm	
10M	4	840mm	
TOTAL 10M BARS			255
TOTAL EPOXY REINF.			3889

CONCRETE	
CLASS "A" IN SUBSTRUCTURE	
Pour No. 1	11.6 m^3
Pour No. 2	1.4 m^3
Pour No. 3	3.3 m^3
Pour No. 4	0.8 m^3
Pour No. 5	20.1 m^3
Pour No. 6	3.1 m^3
TOTAL CLASS "A" IN SUBSTRUCTURE	40.3 m^3

MISCELLANEOUS	
B-Borrow for Structure Backfill	45.5 m^3
150 F.B.C.Perf.C.S. Pipe	9.0 m
5-305ø Steel Encased Concrete Piles x 11 m	55 m
Epoxy Coated Threaded Tie Bar Assemblies	31 Ea.

NOTES:

- For Reinforcing Bar Notes and Bar Bending Details, see Std. 703-BRST-01.
- For Bridge Floor Details, see Dwg. G19.
- For General Notes, see Dwg. G1.
- Exist. Grades per Field Survey were Found to Average 0.03 m Higher than Design Grade per Project I-65-3(33)109.

DWG. G13 OF 24

DENNIS R. CLARK REGISTERED No. 17234 STATE OF INDIANA PROFESSIONAL ENGINEER

RECOMMENDED FOR APPROVAL Dennis R. Clark 7-15-96
DESIGN ENGINEER DATE

DESIGNED: DMS DRAWN: CPM
CHECKED: DRC CHECKED: DRC

INDIANA DEPARTMENT OF TRANSPORTATION

BENT NO. 1 & 3 NORTHBOUND DETAILS
I-65 OVER RAYMOND STREET

HORIZONTAL SCALE	BRIDGE FILE
1:20	I-65-110-5694A
VERTICAL SCALE	DESIGNATION
1:20	8462720
SURVEY BOOK	SHEETS
	136 of 301
CONTRACT	PROJECT
R-22528	IM/65-3(258)110

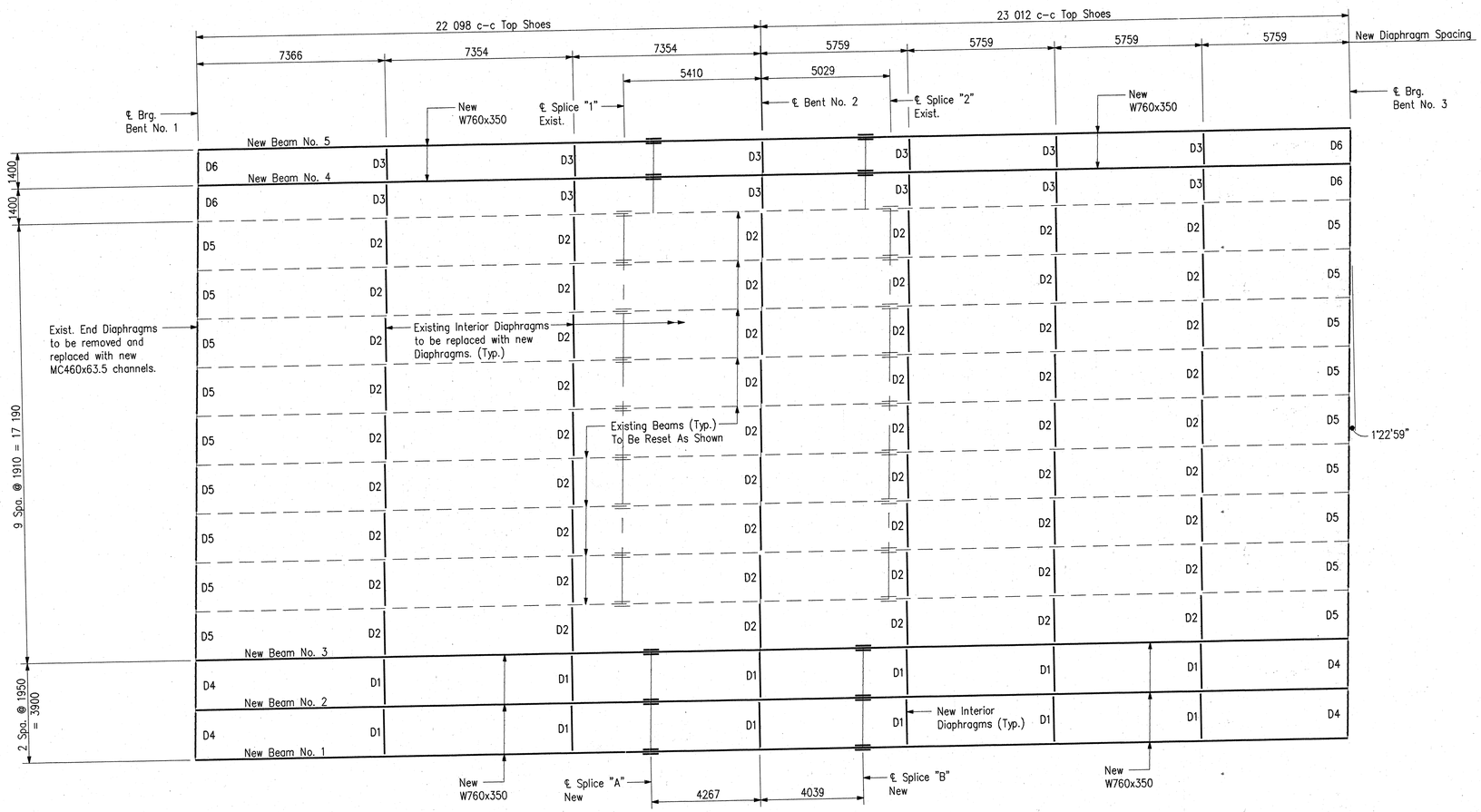

FRAMING PLAN – SOUTHBOUND STRUCTURE

ESTIMATED WEIGHT OF STRUCTURAL STEEL – 97107 kg

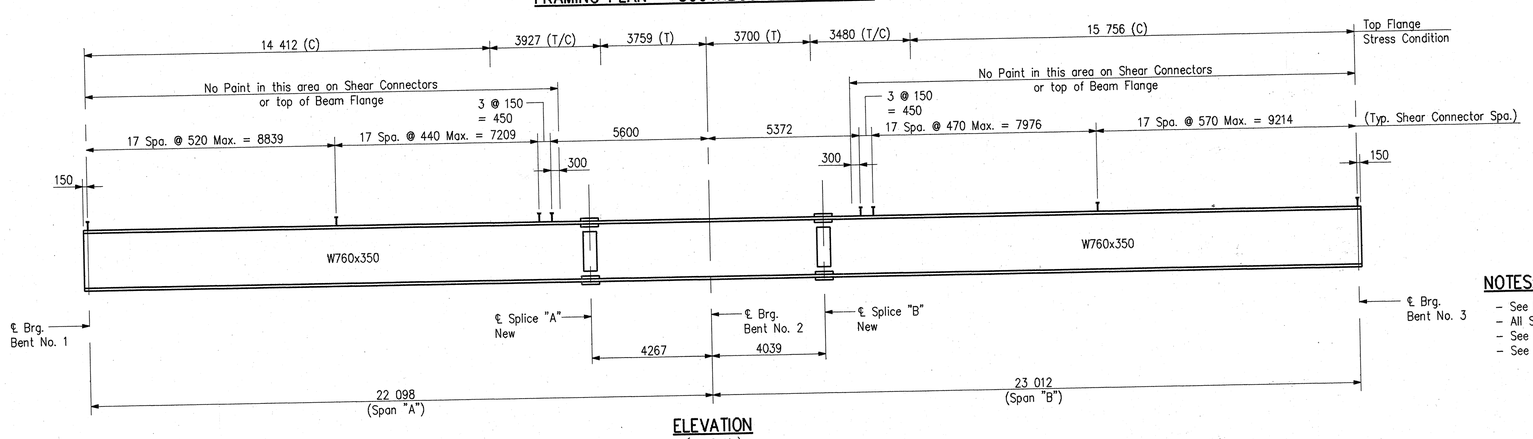

ELEVATION

(No Scale)

NOTES:

- See Dwg. G17, G18 for Bearing Details.
- All Structural Steel ASTM A709-M Grade 250 unless otherwise noted.
- See Special Provisions for Fabrication and Erection Notes.
- See Dwg. G16 for Splice Details and Diaphragm Details.

DWG. G14 OF 24

DENNIS R. CLARK REGISTERED No. 17234 STATE OF INDIANA PROFESSIONAL ENGINEER

RECOMMENDED FOR APPROVAL Dennis R. Clark 7-15-96
DESIGN ENGINEER DATE

DESIGNED: DMS DRAWN: JHB
CHECKED: DRC CHECKED: DMS

INDIANA DEPARTMENT OF TRANSPORTATION

FRAMING PLAN – S.B. STRUCTURE
I-65 OVER RAYMOND STREET

HORIZONTAL SCALE	BRIDGE FILE
1:100	I-65-110-5694A
VERTICAL SCALE	DESIGNATION
1:100	8462720
SURVEY BOOK	SHEETS
	137 of 301
CONTRACT	PROJECT
R-22528	IM/65-3(258)109

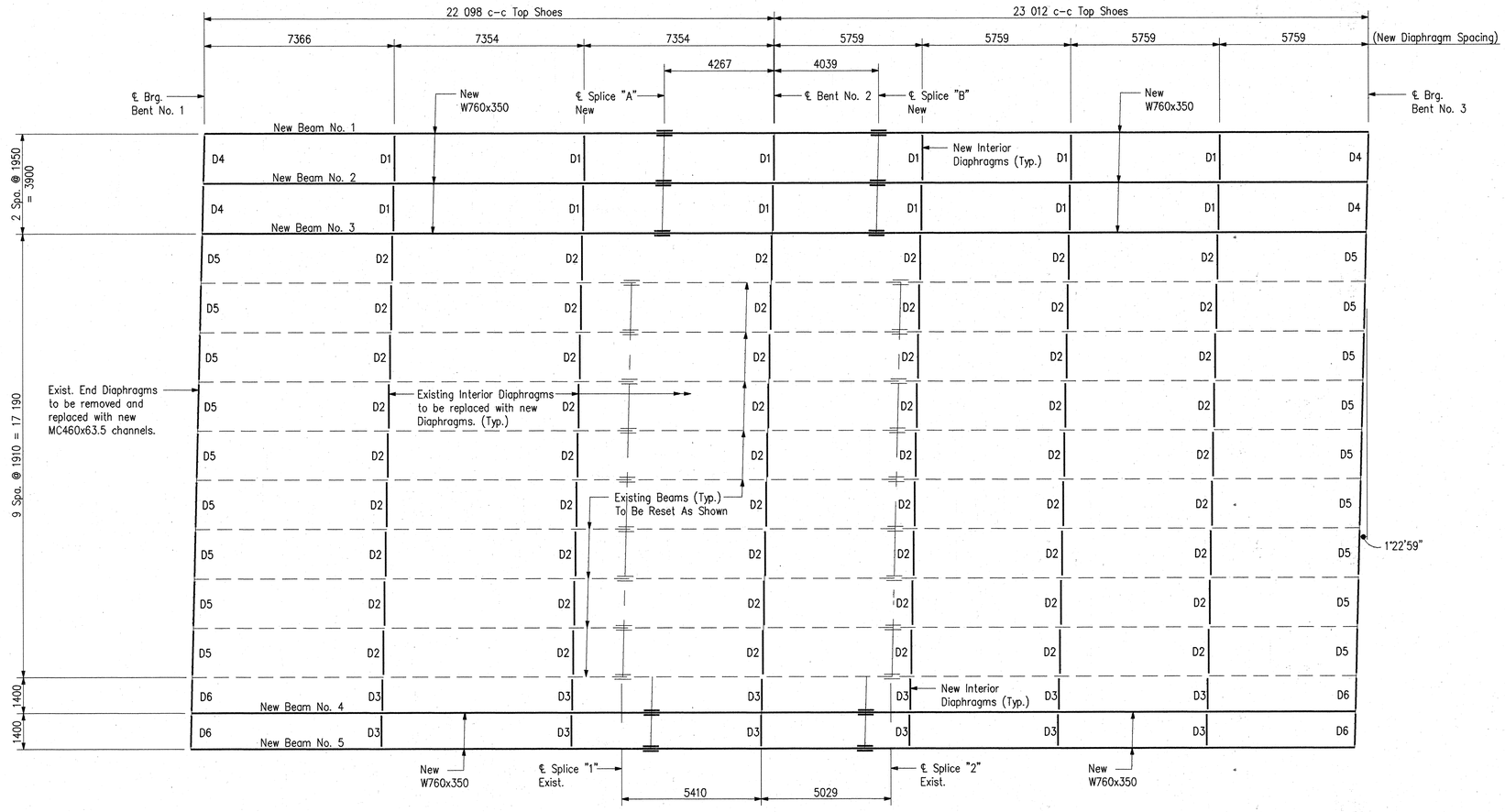

FRAMING PLAN – NORTHBOUND STRUCTURE

ESTIMATED WEIGHT OF STRUCTURAL STEEL – 97107 kg

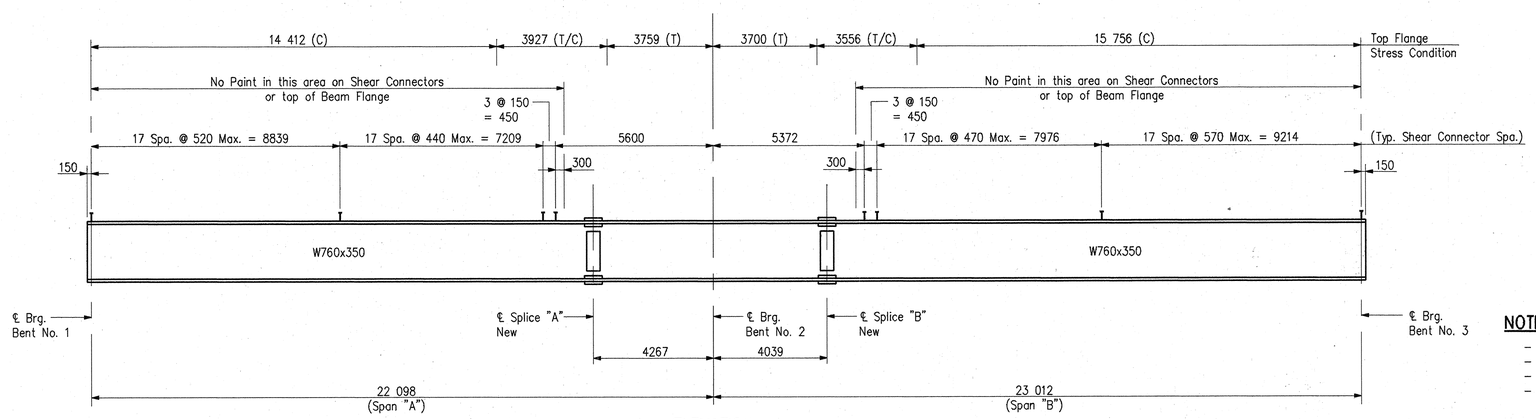

ELEVATION
(No Scale)

NOTES:

- See Dwgs. G17, 18 for Bearing Details.
- All Structural Steel ASTM A709-M Grade 250 unless otherwise noted.
- See Special Provisions for Fabrication and Erection Notes.
- See Dwg. G16 for Splice Details and Diaphragm Details.

DWG. G15 OF 24

DENNIS R. CLARK REGISTERED No. 17234 STATE OF INDIANA PROFESSIONAL ENGINEER

RECOMMENDED FOR APPROVAL Dennis R. Clark 7-15-96
DESIGN ENGINEER DATE

DESIGNED: DMS DRAWN: JHB
CHECKED: DRC CHECKED: DMS

INDIANA DEPARTMENT OF TRANSPORTATION

FRAMING PLAN – N.B. STRUCTURE
I-65 OVER RAYMOND STREET

HORIZONTAL SCALE	BRIDGE FILE
1:100	I-65-110-5694A
VERTICAL SCALE	DESIGNATION
1:100	8462720
SURVEY BOOK	SHEETS
	138 of 301
CONTRACT	PROJECT
R-22528	IM/65-3(258)109

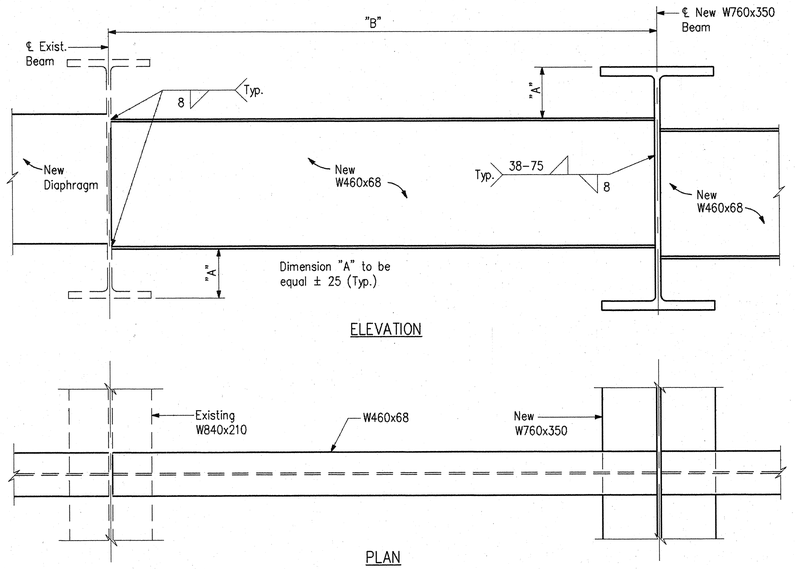

TYPICAL INTERIOR DIAPHRAGM CONNECTION – N.B. & S.B. STR.

Scale: 1:10

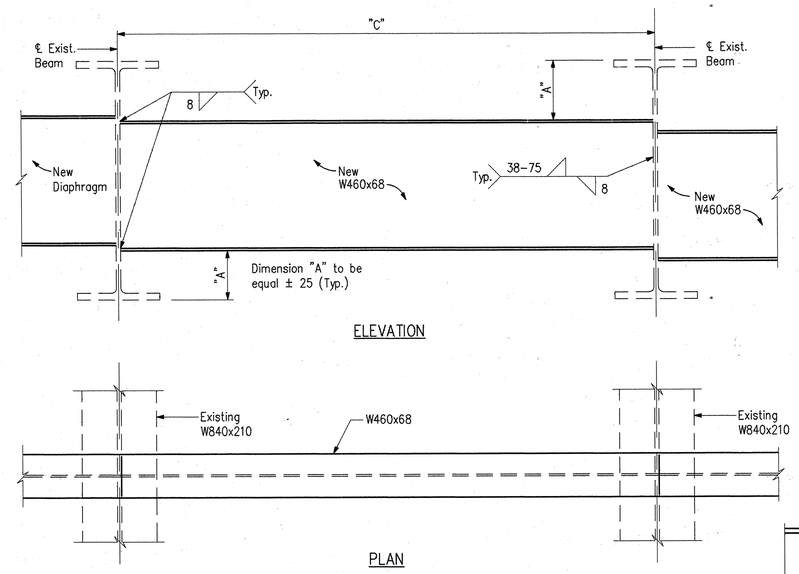

TYPICAL INTERIOR DIAPHRAGM CONNECTION – N.B. & S.B. STR.

Scale: 1:10

Diaphragm No.	"B"	"C"		Qty. Req'd.
D1	1950			36
D2		1910		108
D3			1400	24
D4			1950	8
D5			1910	36
D6			1400	8

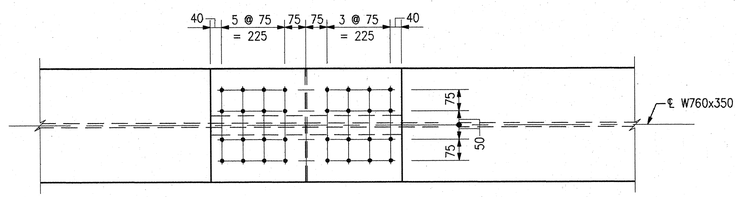

PLAN

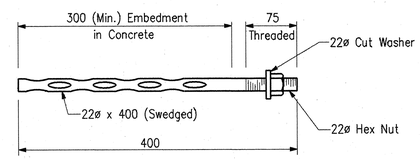

ANCHOR BOLT DETAIL

Bent No. 2 S.B. (8 Req'd.)
Bent No. 2 N.B. (8 Req'd.)

No Scale

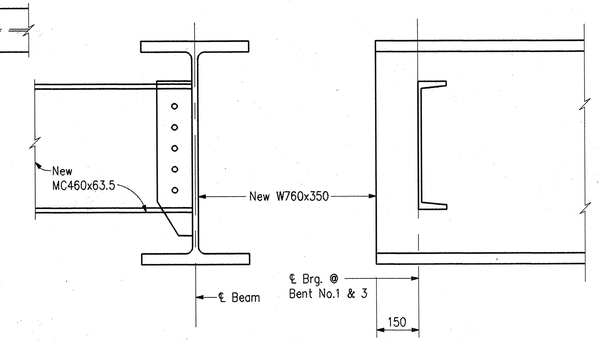

END DIAPHRAGM DETAIL – NEW BEAM

No Scale

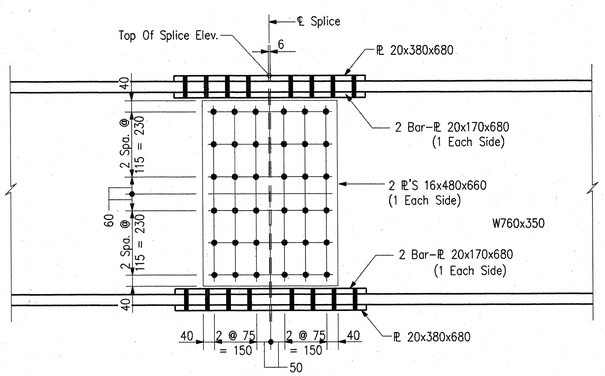

ELEVATION

TYPICAL BEAM SPLICE DETAIL

Scale: 1:10

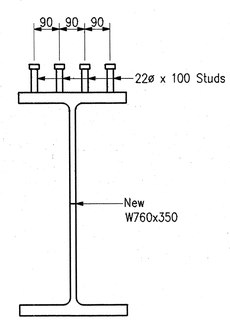

SHEAR CONNECTOR DETAIL

No Scale

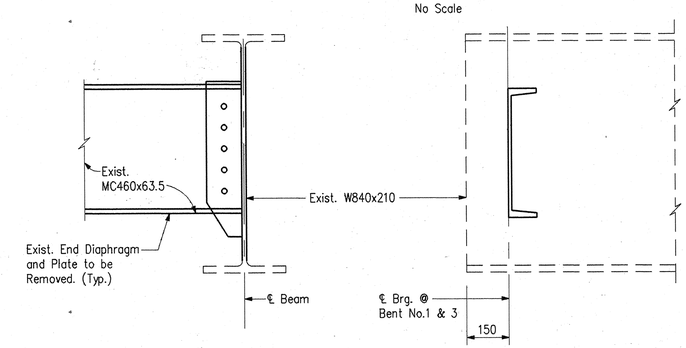

END DIAPHRAGM DETAIL – EXIST. BEAM

No Scale

NOTES:

- All Structural Steel ASTM A709-M Grade 250 unless otherwise noted.
- See Special Provisions for Fabrication and Erection notes.
- See Dwg. G14, G15 for location of Diaphragms and Beam Splice.
- See Drawing G17, G18 for Bearing Details.

DWG. G16 OF 24

DENNIS R. CLARK REGISTERED No. 17234 STATE OF INDIANA PROFESSIONAL ENGINEER

RECOMMENDED FOR APPROVAL Dennis R. Clark 7-15-96
DESIGN ENGINEER DATE

DESIGNED: DMS DRAWN: JHB
CHECKED: DRC CHECKED: DMS

INDIANA DEPARTMENT OF TRANSPORTATION

STRUCTURAL STEEL DETAILS
I-65 OVER RAYMOND ST.

HORIZONTAL SCALE	BRIDGE FILE
As Noted	I-65-110-5694A
VERTICAL SCALE	DESIGNATION
As Noted	8462720
SURVEY BOOK	SHEETS
	139 of 301
CONTRACT	PROJECT
R-22528	IM/65-3(258)109

F:\DOCUMENT\95098-R\CONSTEE 07/13/96 10:52:57 DLB

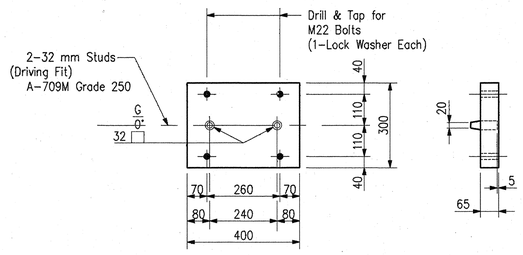

TOP SHOE - BENT NO.2 NEW (ANCHOR BOLTS)

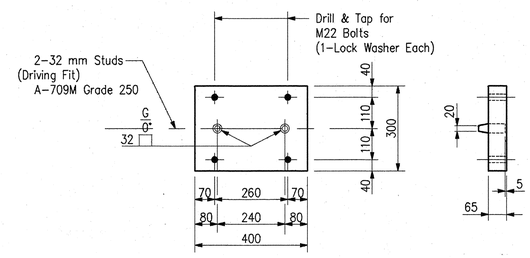

TOP SHOE - BENT NO.2 NEW (ANCHOR PLATES)

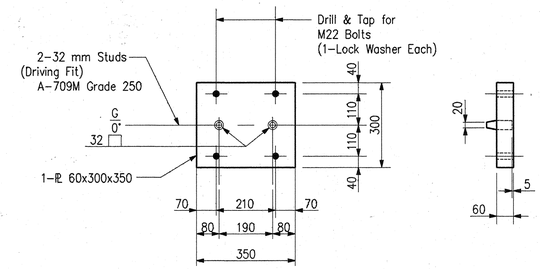

TOP SHOE - BENT NO.2 EXIST.

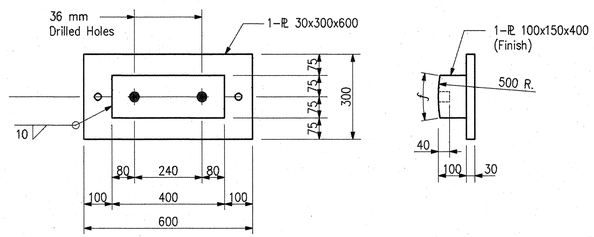

FIXED BASE - BENT NO.2 NEW (ANCHOR BOLTS)

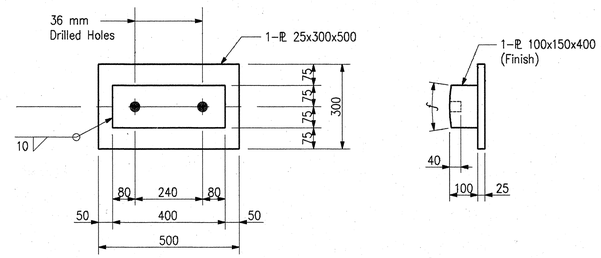

FIXED BASE - BENT NO.2 NEW (ANCHOR PLATES)

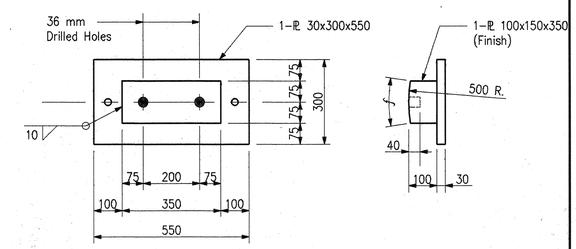

FIXED BASE - BENT NO.2 EXIST

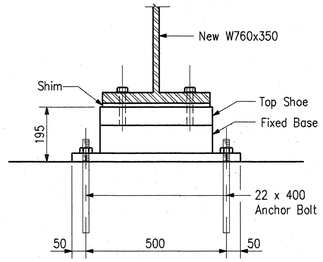

FIXED SHOE ASSEMBLY - BENT NO. 2 NEW

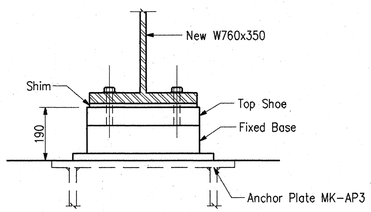

FIXED SHOE ASSEMBLY - BENT NO. 2 NEW

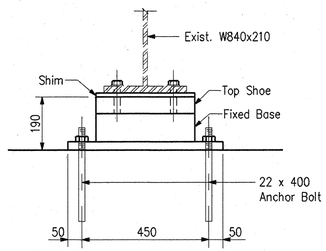

FIXED SHOE ASSEMBLY - BENT NO. 2 EXIST.

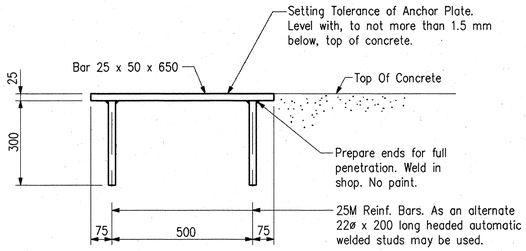

ANCHOR PLATE MK-AP3 DETAILS

No Scale

NOTES:

- For Anchor Bolt Detail, See Dwg. G16.
- For Additional Steel Details, See Dwgs. G14-16, G18.

DWG. G17 OF 24

DENNIS R. CLARK REGISTERED No. 17234 STATE OF INDIANA PROFESSIONAL ENGINEER

RECOMMENDED FOR APPROVAL Dennis R. Clark 7-15-96
DESIGN ENGINEER DATE

DESIGNED: DMS DRAWN: JHB
CHECKED: DRC CHECKED: DMS

INDIANA
DEPARTMENT OF TRANSPORTATION

BEARING DETAILS
I-65 OVER RAYMOND ST.

HORIZONTAL SCALE	BRIDGE FILE
1:10	I-65-110-5694A
VERTICAL SCALE	DESIGNATION
1:10	8462720
SURVEY BOOK	SHEETS
	140 of 301
CONTRACT	PROJECT
R-22528	IM/65-3(258)109

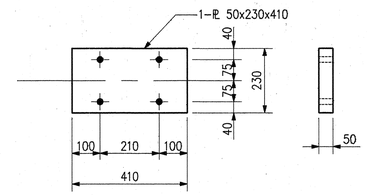

BEARING PLATE DETAIL (BENTS NO.1,3)
(Scale 1:10)

ELASTOMERIC BEARING PAD TYPE 1
@ BENTS NO. 1,3

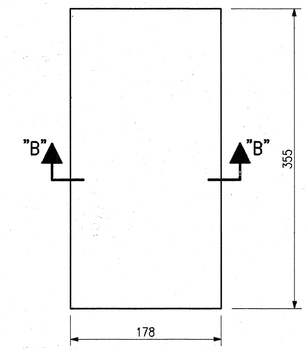

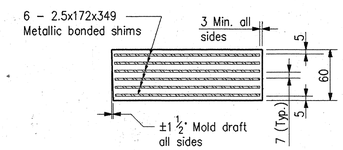

SECTION "B-B"
(No Scale)

TABLE OF SPLICE ELEVATIONS (NEW BEAMS)

	SOUTHBOUND STRUCTURE					NORTHBOUND STRUCTURE				
BEAM NO.	1	2	3	4	5	1	2	3	4	5
Splice "A"	228.336	228.364	228.374	228.334	228.295	228.294	228.333	228.371	228.352	228.324
Splice "B"	228.424	228.452	228.461	228.422	228.382	228.382	228.421	228.459	228.440	228.412

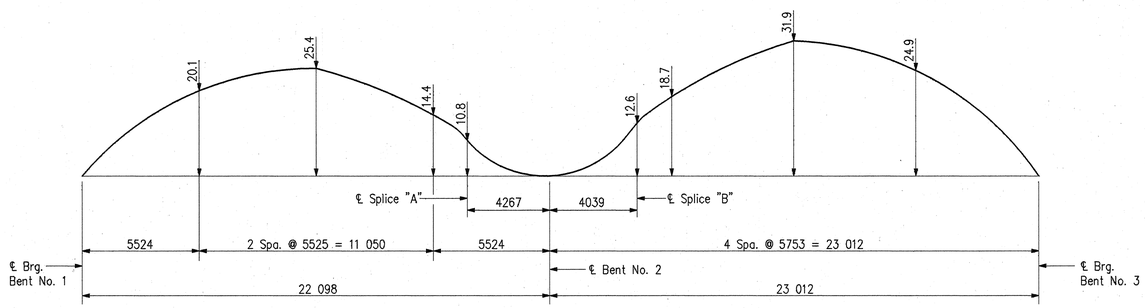

NO LOAD CAMBER DIAGRAM (mm)
No Scale

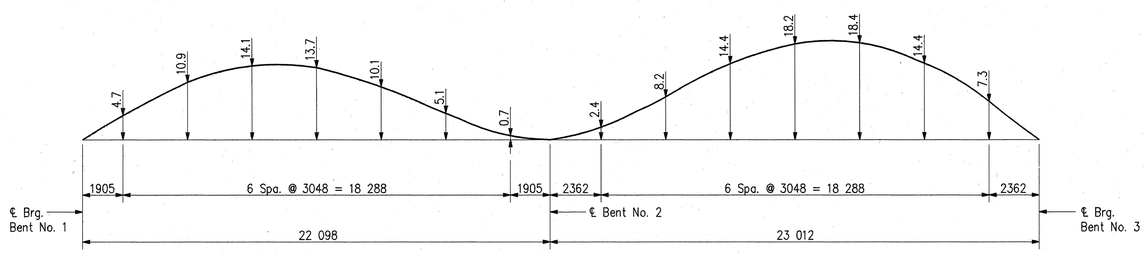

CONCRETE DEAD LOAD DEFLECTION DIAGRAM
No Scale

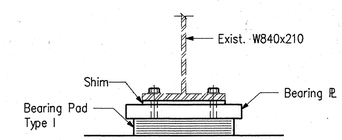

BEARING ASSEMBLY – BENTS NO. 1,3 (EXIST.)

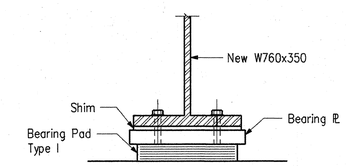

BEARING ASSEMBLY – BENTS NO. 1,3 (NEW)

NOTES:

- All Structural Steel ASTM A709-M Grade 250, unless otherwise noted.
- For General Notes, see Dwg. G2.
- For Splice Location Details, See Dwgs. G14, G15..
- For Structural Steel fabrication notes, see Special Provisions.
- For additional steel details, see Dwgs. G14-17.
- For additional notes and details, see Brg. Std. Dwg. 711-BSTS-01, Dwg. 711-BSTS-02, Dwg., 711-BSTS-03 and Dwg. 711-BSTS-04.

DENNIS R. CLARK REGISTERED No. 17234 STATE OF INDIANA PROFESSIONAL ENGINEER

RECOMMENDED FOR APPROVAL Dennis R. Clark 7-15-96
DESIGN ENGINEER DATE

DESIGNED: DMS DRAWN: JHB
CHECKED: DRC CHECKED: DMS

INDIANA
DEPARTMENT OF TRANSPORTATION

STRUCTURAL STEEL DETAILS
I-65 OVER RAYMOND STREET

HORIZONTAL SCALE	BRIDGE FILE
1:10	I-65-110-5694A
VERTICAL SCALE	DESIGNATION
1:10	8462720
SURVEY BOOK	SHEETS
	141 of 301
CONTRACT	PROJECT
R-22528	IM/65-3(258)109

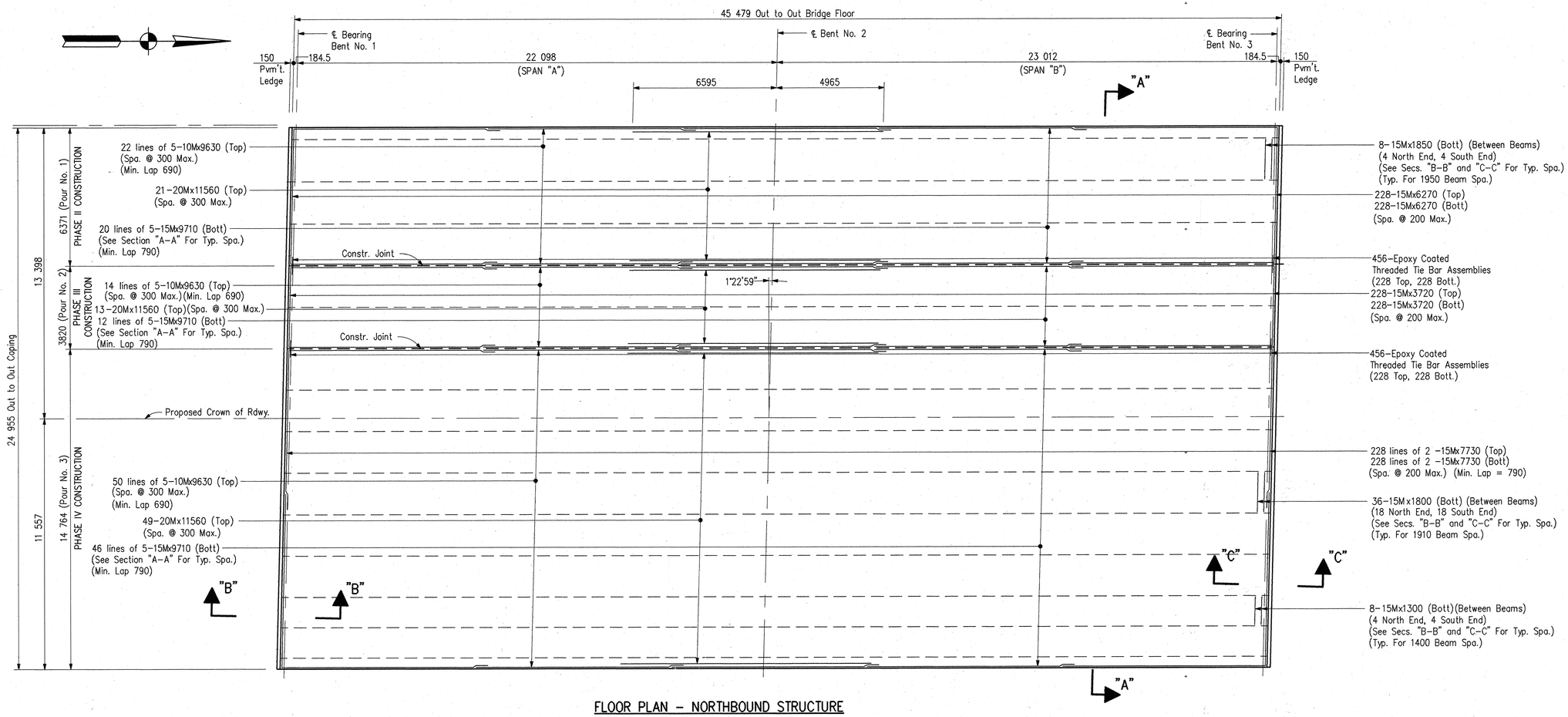

FLOOR PLAN – NORTHBOUND STRUCTURE

(Southbound Structure Same By 180°)

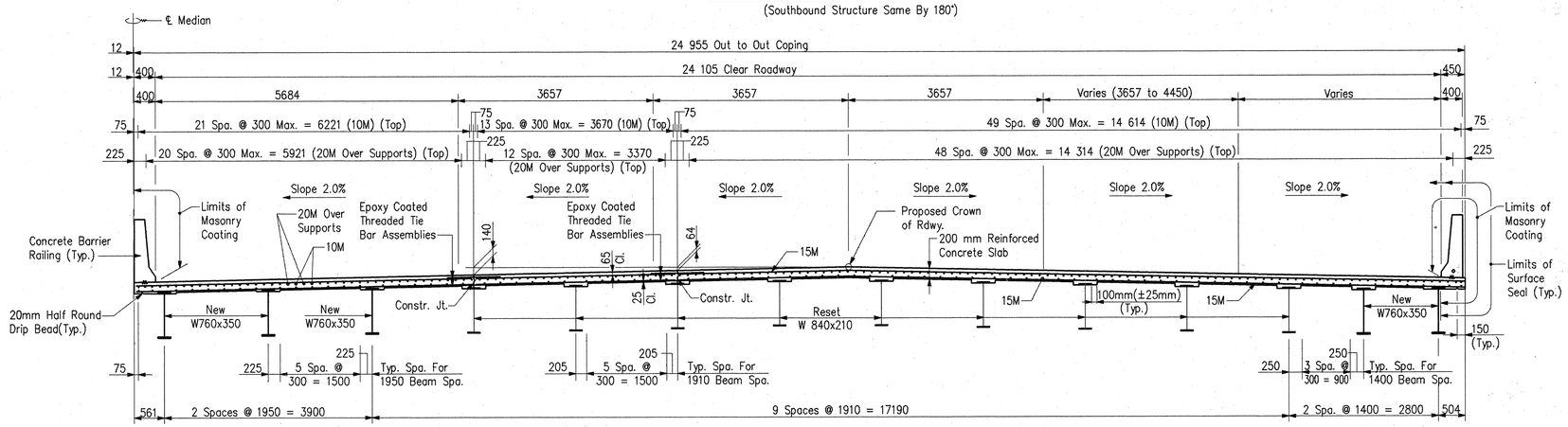

SECTION "A-A"
Scale: 1:50

NOTES:

- Minimum Lap for 10M Bar is 690.
- Minimum Lap for 15M Bar is 790.
- For Reinforcing Bar Notes and Bar Bending Details, see Bridge Std. 703-BRST-01.
- All Reinforcing in Bridge Floor and End Bents to be Epoxy Coated.
- All Concrete in Bridge Floor and End Bents to be Class "C".
- For Bill of Materials, see Dwg. G20.
- For General Notes, see Dwg. G2.
- For End Bent Details and Section "B-B", see Dwg. G20.
- For Location of Roadway Drains, See General Plan, Dwg. G1.

DWG. G19 OF 24

DENNIS R. CLARK REGISTERED No. 17234 STATE OF INDIANA PROFESSIONAL ENGINEER

RECOMMENDED FOR APPROVAL Dennis R. Clark 7-15-96
DESIGN ENGINEER DATE

DESIGNED: DMS DRAWN: JHB
CHECKED: DRC CHECKED: DMS

INDIANA DEPARTMENT OF TRANSPORTATION

BRIDGE FLOOR DETAILS
I-65 OVER RAYMOND ST.

HORIZONTAL SCALE	BRIDGE FILE
1:100	I-65-110-5694A
VERTICAL SCALE	DESIGNATION
1:100	8462720
SURVEY BOOK	SHEETS
	142 of 301
CONTRACT	PROJECT
R-22528	IM/65-3(258)109

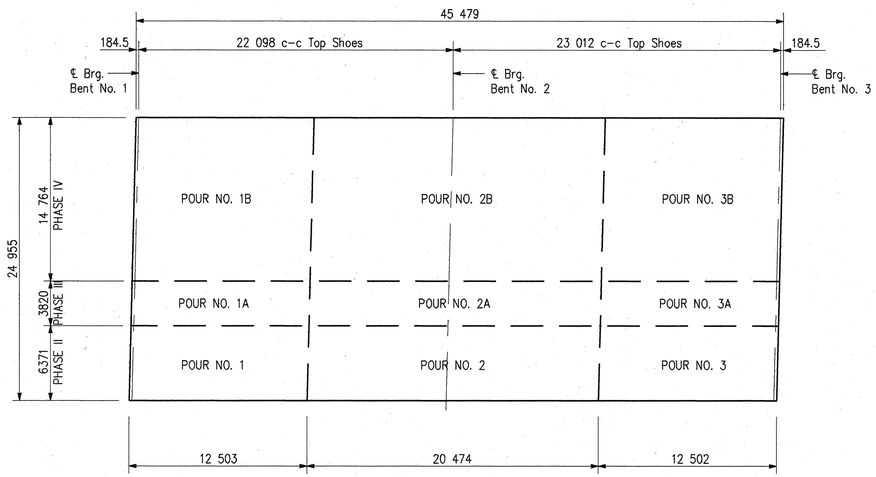

POUR DIAGRAM – S.B. STRUCTURE

(No Scale)

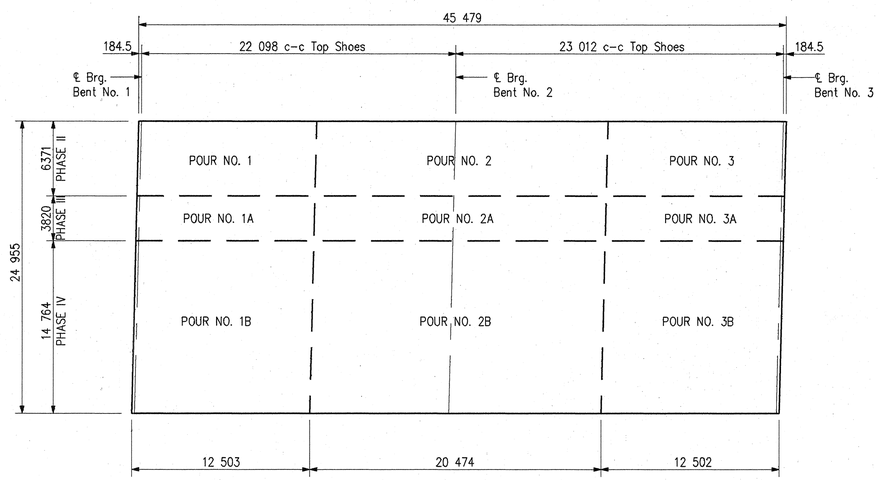

POUR DIAGRAM – N.B. STRUCTURE

(No Scale)

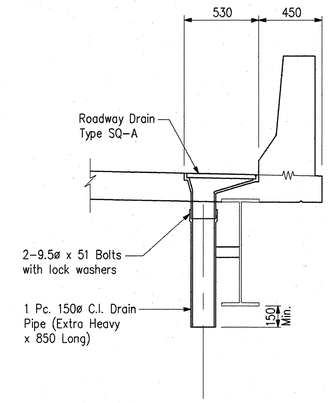

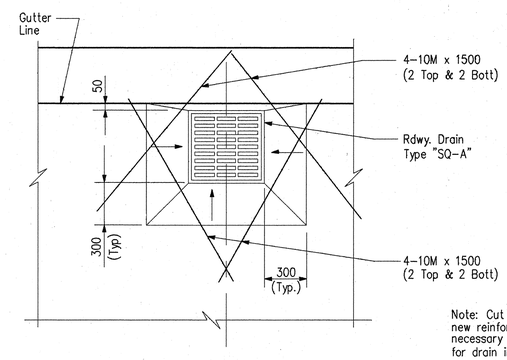

Note: Cut and bend new reinforcing as necessary to allow for drain installation.

PLAN

ROADWAY DRAIN TYPE SQ-A DETAILS

Scale: 1:20

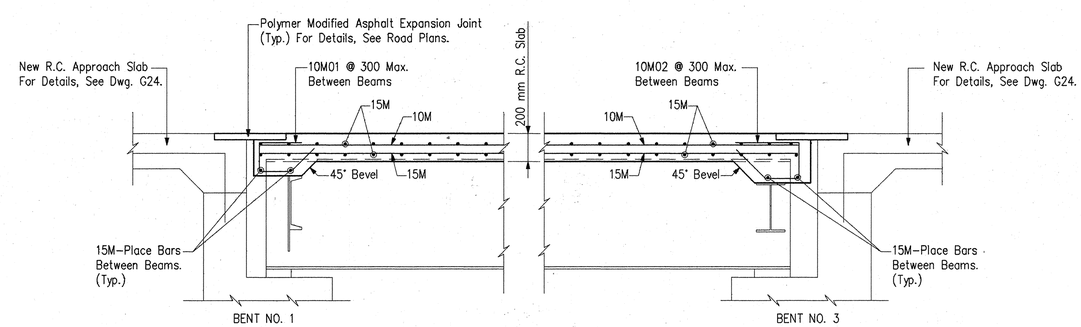

SECTION "B-B"

Scale 1:20

SECTION "C-C"

Scale 1:20

SOUTHBOUND STRUCTURE BILL OF MATERIALS

REINFORCING STEEL			
SIZE & MARK	No. OF BARS	LENGTH	WEIGHT (Kg)
EPOXY COATED REINFORCING			
20M	83	11560mm	
TOTAL 20M BARS			2260
15M	390	9710mm	
15M	912	7730mm	
15M	456	6270mm	
15M	456	3720mm	
15M	8	1850mm	
15M	36	1800mm	
15M	8	1300mm	
TOTAL 15M BARS			24307
10M	430	9630mm	
10M	16	1500mm	
TOTAL 10M BARS			3269
TOTAL EPOXY REINF.			29836

CONCRETE		
CLASS "C" IN SUPERSTRUCTURE		
POUR NO. 1	16.7 m³	
POUR NO. 1A	10.0 m³	
POUR NO. 1B	38.9 m³	
POUR NO. 2	26.5 m³	
POUR NO. 2A	15.9 m³	
POUR NO. 2B	61.8 m³	
POUR NO. 3	16.7 m³	
POUR NO. 3A	10.0 m³	
POUR NO. 3B	38.9 m³	
TOTAL CLASS "C" IN SUPERSTRUCTURE		235.4 m³

MISCELLANEOUS	
EPOXY COATED THREADED BAR ASSEMBLIES	912 Each
SURFACE SEAL	1123.5 m²

NORTHBOUND STRUCTURE BILL OF MATERIALS

REINFORCING STEEL			
SIZE & MARK	No. OF BARS	LENGTH	WEIGHT (Kg)
EPOXY COATED REINFORCING			
20M	83	11560mm	
TOTAL 20M BARS			2260
15M	390	9710mm	
15M	912	7730mm	
15M	456	6270mm	
15M	456	3720mm	
15M	8	1850mm	
15M	36	1800mm	
15M	8	1300mm	
TOTAL 15M BARS			24307
10M	430	9630mm	
10M	16	1500mm	
TOTAL 10M BARS			3269
TOTAL EPOXY REINF.			29836

CONCRETE		
CLASS "C" IN SUPERSTRUCTURE		
POUR NO. 1	16.7 m³	
POUR NO. 1A	10.0 m³	
POUR NO. 1B	38.9 m³	
POUR NO. 2	26.5 m³	
POUR NO. 2A	15.9 m³	
POUR NO. 2B	61.8 m³	
POUR NO. 3	16.7 m³	
POUR NO. 3A	10.0 m³	
POUR NO. 3B	38.9 m³	
TOTAL CLASS "C" IN SUPERSTRUCTURE		235.4 m³

MISCELLANEOUS	
EPOXY COATED THREADED BAR ASSEMBLIES	912 Each
SURFACE SEAL	1123.5 m²

DWG. G20 OF 24

DENNIS R. CLARK REGISTERED No. 17234 STATE OF INDIANA PROFESSIONAL ENGINEER

RECOMMENDED FOR APPROVAL Dennis R. Clark 7-15-96
DESIGN ENGINEER DATE

DESIGNED: JHB DRAWN: JHB
CHECKED: DRC CHECKED: DMS

INDIANA DEPARTMENT OF TRANSPORTATION

FLOOR DETAILS – N.B. & S.B. STRUCTURES
I-65 OVER RAYMOND ST.

HORIZONTAL SCALE	BRIDGE FILE
As Noted	I-65-110-5694A
VERTICAL SCALE	DESIGNATION
As Noted	8462720
SURVEY BOOK	SHEETS
	143 of 301
CONTRACT	PROJECT
R-22528	IM/65-3(258)109

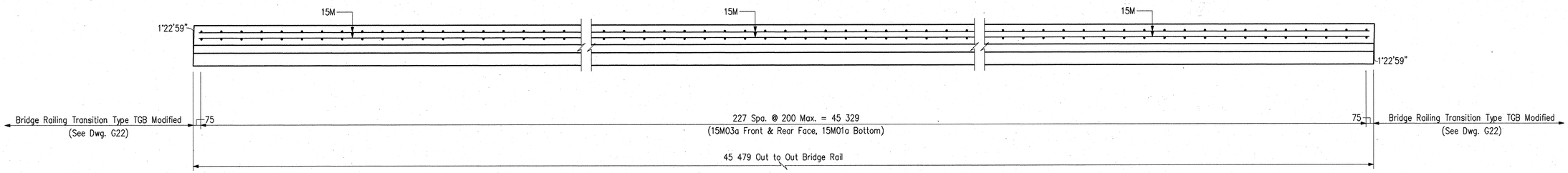

PLAN

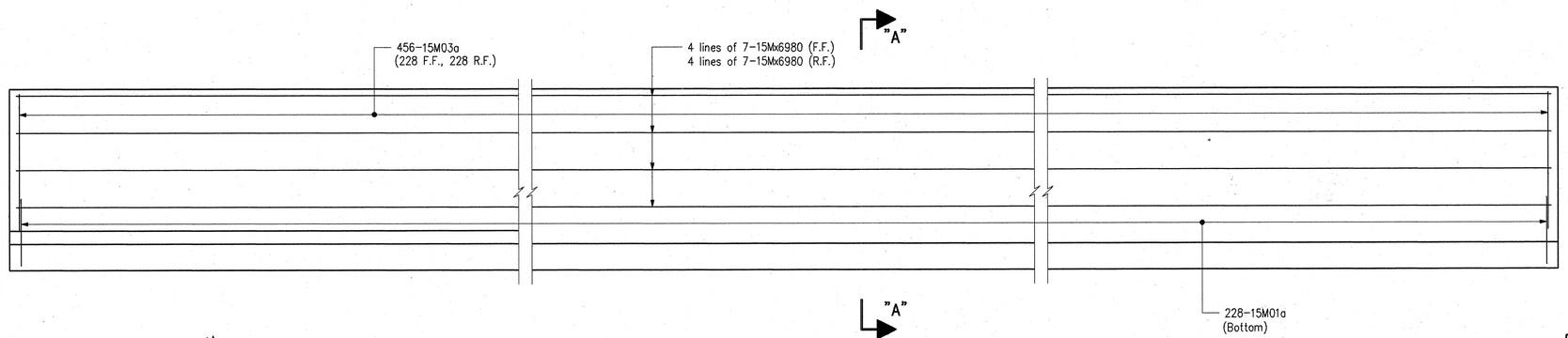

ELEVATION

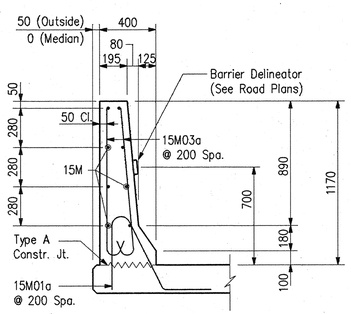

SECTION "A-A"

Scale 1:20

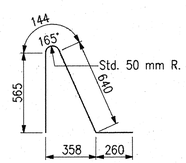

15M01a x 1609

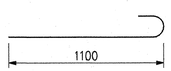

15M03a x 1280

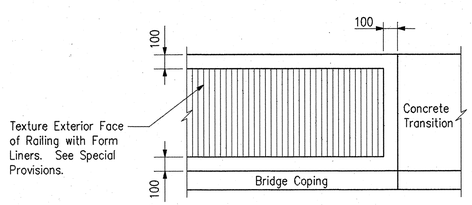

RAILING TEXTURE DETAIL

Scale 1:20

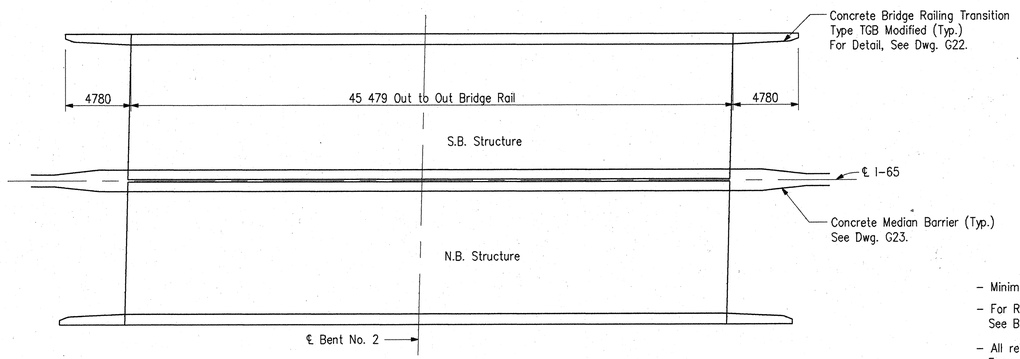

LOCATION PLAN

No Scale

BILL OF MATERIALS

REINFORCING STEEL			
SIZE & MARK	No. OF BARS	LENGTH	WEIGHT (Kg)
EPOXY COATED REINFORCING			
15M01a	228	1609mm	
15M03a	456	1280mm	
15M	56	6980mm	
TOTAL 15M BARS			2106
TOTAL EPOXY REINF.			2106
CONCRETE			
Concrete Railing Class C			45.5 m
MISCELLANEOUS			
Concrete Bridge Railing Transition Type			
TGB Modified *			2 Ea.
Surface Seal **			181.3 m²
Masonry Coating **			181.3 m²

Quantities for One Rail – 4 Required
* Not Required For Median Rail
** Quanitities for One Structure – 2 Required

NOTES

- Minimum lap for 15M bar is 580 mm.
- For Reinforcing Bar Notes and Bar Bending Details, See Bridge Standard 703-BRST-01.
- All reinforcing steel in Barrier Rail to be Epoxy Coated.
- All Concrete in Barrier Rail to be Class "C".
- For Bridge Approach Slab Details, See Dwg. G24.

DWG. G21 OF 24

DENNIS R. CLARK REGISTERED No. 17234 STATE OF INDIANA PROFESSIONAL ENGINEER

RECOMMENDED FOR APPROVAL Dennis R. Clark 7-15-96
DESIGN ENGINEER DATE

DESIGNED: JHB DRAWN: JHB
CHECKED: DRC CHECKED: DMS

INDIANA DEPARTMENT OF TRANSPORTATION

CONCRETE BARRIER RAILING DETAILS

HORIZONTAL SCALE	BRIDGE FILE
1:20	I-65-110-5694A
VERTICAL SCALE	DESIGNATION
1:20	8462720
SURVEY BOOK	SHEETS
	144 of 301
CONTRACT	PROJECT
R-22528	IM/65-3(258)109

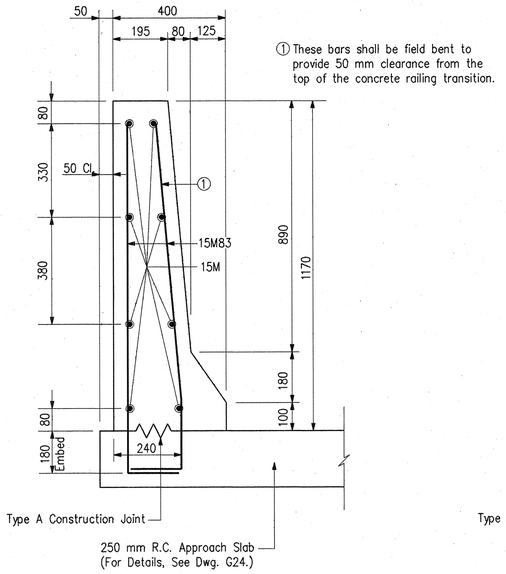

SECTION "A-A"
Scale 1:10

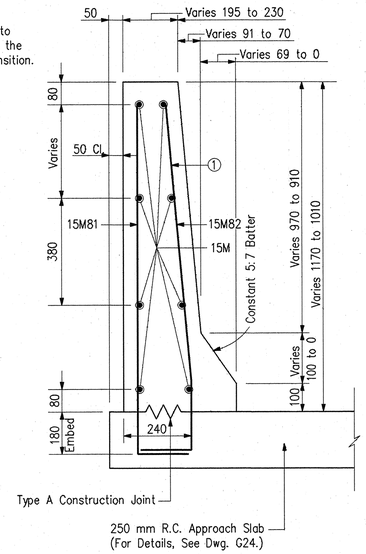

SECTION "B-B"
Scale 1:10

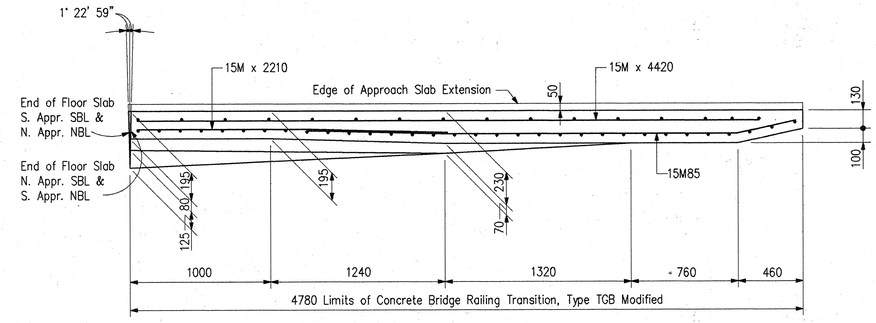

PLAN

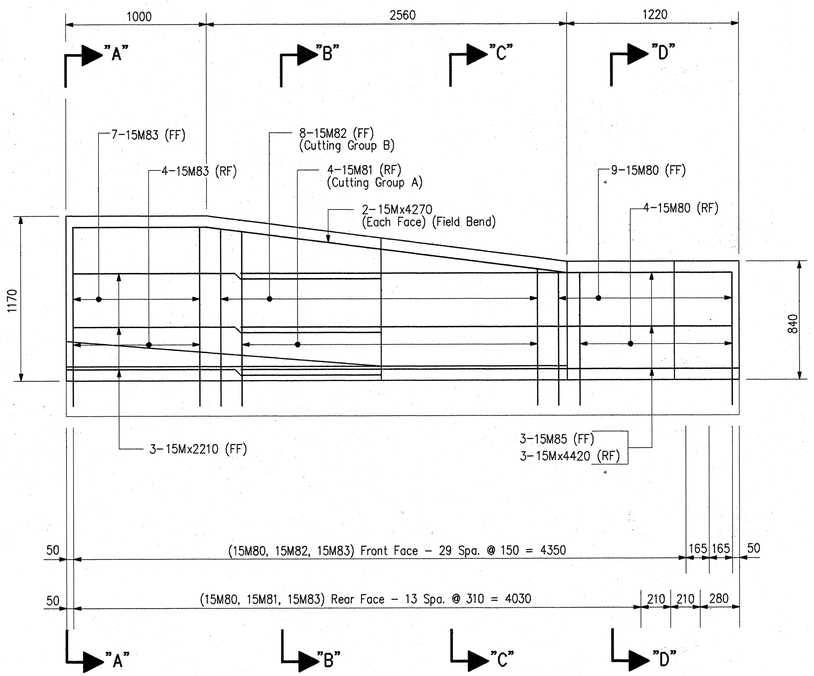

ELEVATION

BILL OF MATERIALS

These quantities are for one Concrete Bridge Railing Transition, Type TGB Modified. These items are provided for information only and are not the pay items.

BILL OF MATERIALS

REINFORCING STEEL			
SIZE & MARK	No. OF BARS	LENGTH	WEIGHT (Kg)
EPOXY COATED REINFORCING			
15M85	3	3200mm	
15M82	8	2630mm	
15M81	4	2615mm	
15M83	11	1420mm	
15M80	13	1150mm	
15M	3	4420mm	
15M	2	4270mm	
15M	3	2210mm	
TOTAL 15M BARS			157
TOTAL EPOXY REINF.			157
MISCELLANEOUS			
CONCRETE, CLASS C			1.2 m^3
SURFACE SEAL			11.0 m^2
MASONRY COATING			11.0 m^2

NOTES

- For additional details, see Standard Drawing 706-BRTT-06.
- For attachment of Guardrail Transition Type TGB, see Standard Drawing 706-BRTT-07.
- For Reinforced Concrete Approach Slab Details, see Dwg. G24.
- For Reinforcing Bar Notes and Bar Bending Details, see Standard Drawing 703-BRST-01.
- All reinforcing steel to be epoxy coated.
- Concrete in Concrete Bridge Railing Transition, Type TGB Modified to be Class C.

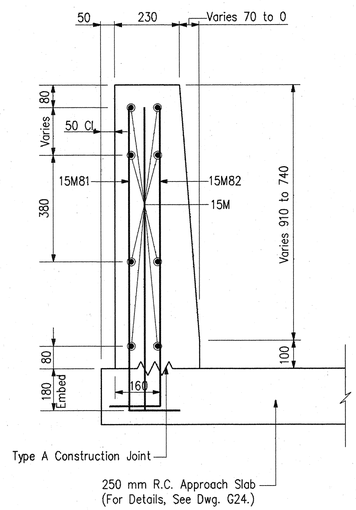

SECTION "C-C"
Scale 1:10

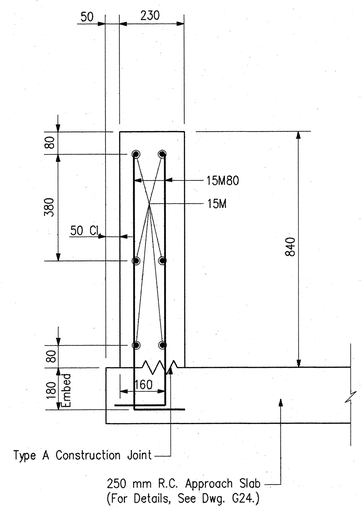

SECTION "D-D"
Scale 1:10

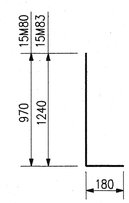

15M80 X 1150
15M83 X 1420

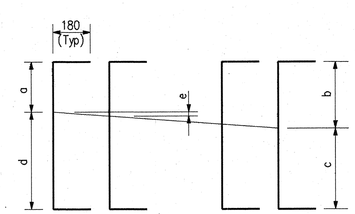

CUTTING GROUP A 4-15M81 X 2615
CUTTING GROUP B 8-15M82 X 2630

CUTTING GROUP	a	b	c	d	e
A	970	1105	1150	1285	45
B	970	1124	1146	1300	22

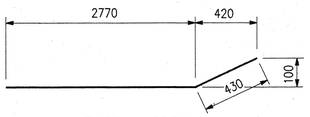

15M85 X 3200

DWG. G22 OF 24

DENNIS R. CLARK REGISTERED No. 17234 STATE OF INDIANA PROFESSIONAL ENGINEER

RECOMMENDED FOR APPROVAL Dennis R. Clark 1-15-96
DESIGN ENGINEER DATE

DESIGNED: PEB DRAWN: PEB
CHECKED: DRC CHECKED: DMS

INDIANA DEPARTMENT OF TRANSPORTATION

CONCRETE BRIDGE RAILING TRANSITION TYPE TGB MODIFIED

HORIZONTAL SCALE	BRIDGE FILE
1:20	I-65-110-5694A
VERTICAL SCALE	DESIGNATION
1:20	8462720
SURVEY BOOK	SHEETS
	145 of 301
CONTRACT	PROJECT
R-22528	IM/65-3(258)109

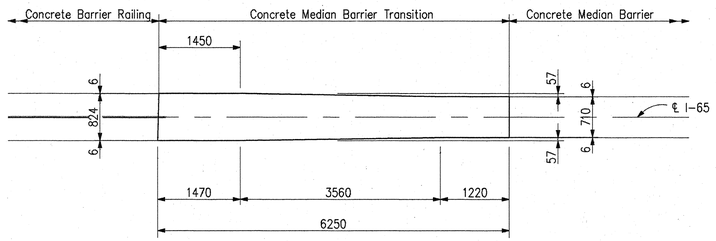

PLAN

Scale 1:50

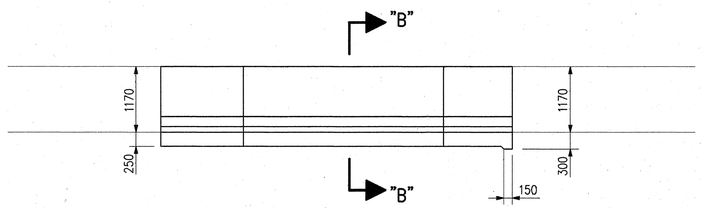

ELEVATION

Scale 1:50

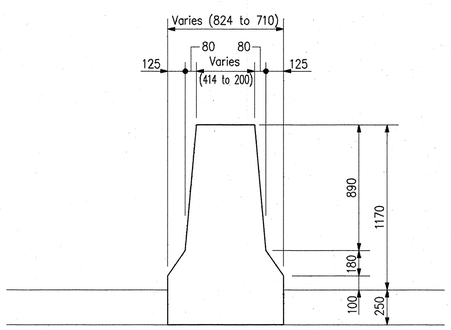

SECTION "B-B"

Scale 1:20

CONCRETE MEDIAN BARRIER TRANSITION

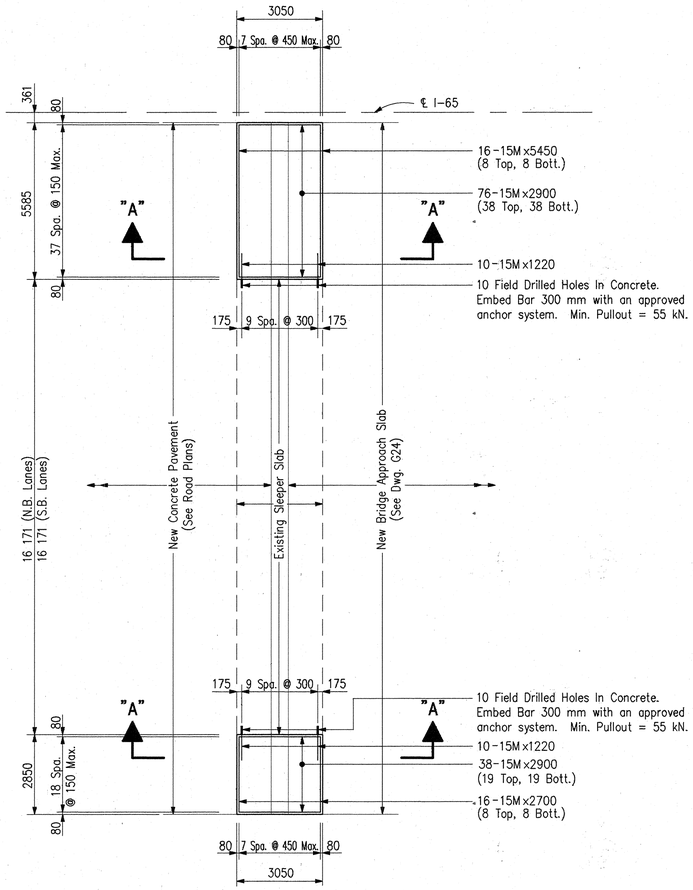

PLAN

Scale 1:100

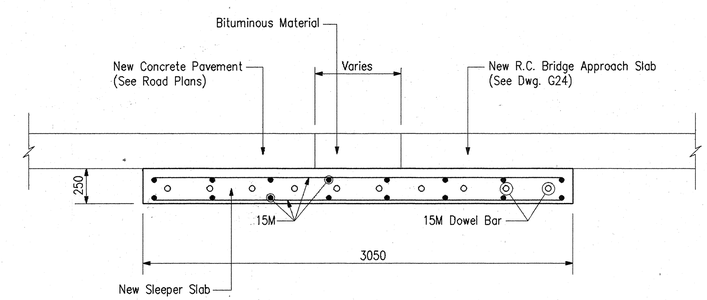

SECTION "A-A"

Scale 1:20

SLEEPER SLAB EXTENSION

SLEEPER SLAB EXTENSIONS

BILL OF MATERIALS

REINFORCING STEEL			
SIZE & MARK	No. OF BARS	LENGTH	WEIGHT (Kg)
PLAIN REINFORCING			
15M	16	5450mm	
15M	114	2900mm	
15M	16	2700mm	
15M	20	1220mm	
TOTAL 15M BARS			762
TOTAL PLAIN REINF.			762
CONCRETE			
REINFORCED CONCRETE PAVEMENT, 250 mm			
	Pour No. 1	17.0 m²	
	Pour No. 2	8.7 m²	
TOTAL R.C. PAVEMENT, 250 mm			25.7 m²
MISCELLANEOUS			
FIELD DRILLED HOLES IN CONCRETE			20 EACH

(Quantities are for one end of one structure only. Four are required.)

DWG. G23 OF 24

DENNIS R. CLARK REGISTERED No. 17234 STATE OF INDIANA PROFESSIONAL ENGINEER

RECOMMENDED FOR APPROVAL Dennis R. Clark 7-15-96
DESIGN ENGINEER DATE

DESIGNED: JHB DRAWN: JHB
CHECKED: DRC CHECKED: DMS

INDIANA DEPARTMENT OF TRANSPORTATION

MISCELLANEOUS DETAILS
I-65 OVER RAYMOND STREET

HORIZONTAL SCALE	BRIDGE FILE
1:100	I-65-110-5694A
VERTICAL SCALE	DESIGNATION
1:100	8462720
SURVEY BOOK	SHEETS
	146 of 301
CONTRACT	PROJECT
R-22528	IM/65-3(258)109

F:\DOCUMENT\95098-D.DGN\MISC 07/13/96 08:23:28 DLB

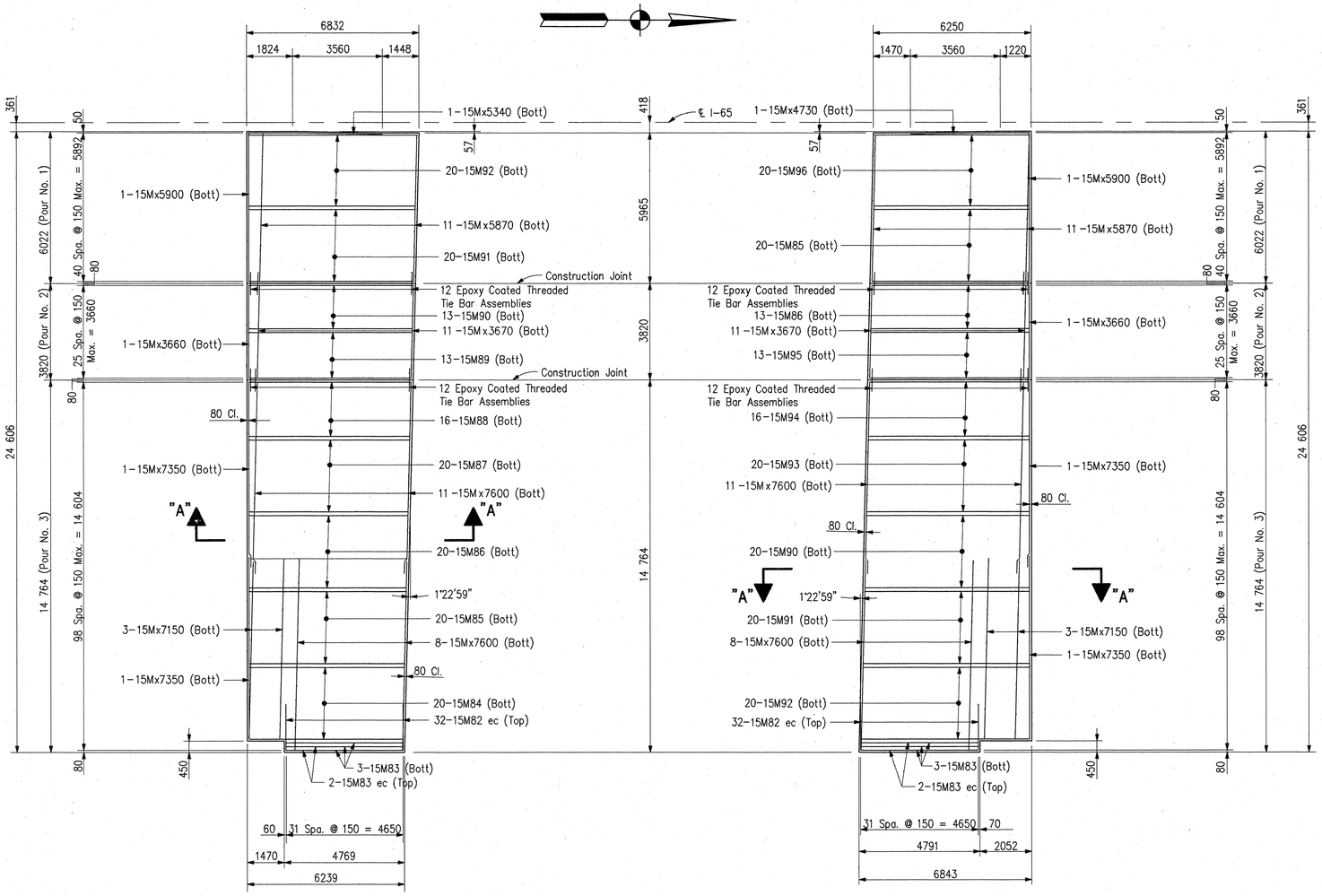

SOUTH APPROACH – N.B. LANES
BILL OF MATERIALS

REINFORCING STEEL			
SIZE & MARK	No. OF BARS	LENGTH	WEIGHT (Kg)
EPOXY COATED REINFORCING			
15M83	2	4830mm	
15M82	32	2010mm	
TOTAL 15M BARS			116
TOTAL EPOXY REINF.			116
PLAIN REINFORCING			
15M92	20	6840mm	
15M91	20	6770mm	
15M90	13	6700mm	
15M89	13	6650mm	
15M88	16	6600mm	
15M87	20	6540mm	
15M86	20	6470mm	
15M85	20	6400mm	
15M84	20	6320mm	
15M83	3	4830mm	
15M	19	7600mm	
15M	2	7350mm	
15M	3	7150mm	
15M	1	5900mm	
15M	11	5870mm	
15M	1	5340mm	
15M	11	3670mm	
15M	1	3660mm	
TOTAL 15M BARS			2168
TOTAL PLAIN REINF.			2168

CONCRETE		
REINFORCED CONCRETE PAVEMENT, 250 mm		
POUR NO. 1	40.5 m³	
POUR NO. 2	25.4 m³	
POUR NO. 3	94.1 m³	
TOTAL R.C. PAVEMENT, 250 mm		160.0 m³

MISCELLANEOUS	
SUBBASE FOR CEMENT CONCRETE PAVEMENT	22.8 m²
REMOVAL OF PAVEMENT	95.3 m²
EPOXY COATED THREADED TIE BAR ASSEMBLY	24 EACH

NORTH APPROACH – N.B. LANES
BILL OF MATERIALS

REINFORCING STEEL			
SIZE & MARK	No. OF BARS	LENGTH	WEIGHT (Kg)
EPOXY COATED REINFORCING			
15M83	2	4830mm	
15M82	32	2010mm	
TOTAL 15M BARS			116
TOTAL EPOXY REINF.			116
PLAIN REINFORCING			
15M92	20	6840mm	
15M91	20	6770mm	
15M90	20	6700mm	
15M93	20	6620mm	
15M94	16	6560mm	
15M95	13	6500mm	
15M86	13	6470mm	
15M85	20	6400mm	
15M96	20	6340mm	
15M83	3	4830mm	
15M	19	7600mm	
15M	2	7350mm	
15M	3	7150mm	
15M	1	5900mm	
15M	11	5870mm	
15M	1	4730mm	
15M	11	3670mm	
15M	1	3660mm	
TOTAL 15M BARS			2169
TOTAL PLAIN REINF.			2169

CONCRETE		
REINFORCED CONCRETE PAVEMENT, 250 mm		
POUR NO. 1	37.9 m³	
POUR NO. 2	24.6 m³	
POUR NO. 3	97.5 m³	
TOTAL R.C. PAVEMENT, 250 mm		160.0 m³

MISCELLANEOUS	
SUBBASE FOR CEMENT CONCRETE PAVEMENT	22.8 m²
REMOVAL OF PAVEMENT	96.0 m²
EPOXY COATED THREADED TIE BAR ASSEMBLY	24 EACH

SOUTH APPROACH – NORTHBOUND LANES
(North Approach – Southbound Lanes Same by 180°)

NORTH APPROACH – NORTHBOUND LANES
(South Approach – Southbound Lanes Same by 180°)

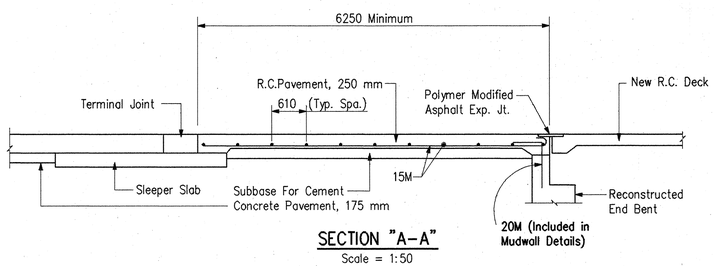

SECTION "A–A"
Scale = 1:50

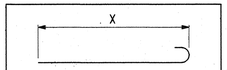

MARK	X	LENGTH
15M82	1830	2010
15M83	4650	4830
15M84	6100	6320
15M85	6220	6400
15M86	6290	6470
15M87	6360	6540
15M88	6420	6600
15M89	6470	6650
15M90	6520	6700
15M91	6590	6770
15M92	6660	6840
15M93	6440	6620
15M94	6380	6560
15M95	6320	6500
15M96	6160	6340

NOTES

- For Reinforcing Bar Notes and Bar Bending Details, See Bridge Standard 703-BRST-01.
- ec indicates Epoxy Coated Reinforcing Steel.
- Minimum Lap for 15M Bar is 530 mm.
- For Concrete Barrier Rail Transition, Type TGB, See Bridge Standards 706-BRTT-01 thru -04.

DWG. G24 OF 24

DENNIS R. CLARK REGISTERED No. 17234 STATE OF INDIANA PROFESSIONAL ENGINEER

RECOMMENDED FOR APPROVAL — DESIGN ENGINEER — DATE 7-15-96

DESIGNED: JHB | DRAWN: JHB
CHECKED: DRC | CHECKED: DRC

INDIANA DEPARTMENT OF TRANSPORTATION

REINFORCED CONCRETE BRIDGE APPROACH DETAILS

HORIZONTAL SCALE	BRIDGE FILE
1:100	I-65-110-5694A
VERTICAL SCALE	DESIGNATION
1:100	8462720
SURVEY BOOK	SHEETS
	147 of 301
CONTRACT	PROJECT
R-22528	IM/65-3(258)109

BRIDGE FILE I-65-109-5691A

STRUCTURE QUANTITIES

ITEM	CONCRETE CLASS C SUPERSTR m³	CONCRETE CLASS C SUBSTR m³	CONCRETE CLASS A SUBSTR m³	CONCRETE CLASS B ABOVE FTG. m³	CONCRETE CLASS B IN FTG. m³	CONCRETE SLOPEWALL 125 mm m²	CONCRETE RAILING CLASS C m³	CONCRETE RAILING CLASS C m	REINF. STEEL TOTAL kg	STRUCT. STEEL *** kg	EPOXY COATED REINF. STEEL kg	ANCHOR PLATES MK-AP3 EACH	THREADED TIE BAR ASSEMBLY EACH	TREATED TIMBER PILES NO.	TREATED TIMBER PILES m	305ø STEEL ENCASED CONC. PILES NO.	305ø STEEL ENCASED CONC. PILES m	STEEL BEARING 310x79 PILES NO.	STEEL BEARING 310x79 PILES m	CAST IRON DRAIN PIPE 150ø kg	CAST IRON, GRATES, BASINS, & FITTINGS kg	"B" BORROW BACKFILL m³	FOUNDATION EXCAVATION UNCLASSIFIED m³	GALVANIZED STEEL CONDUIT 50 mm m	1/c #4 CU IN CONDUIT m	EPOXY COATED THREADED TIE BAR ASSEMBLIES EACH	ELASTOMERIC BEARING ASSEMBLY EACH	EXP. JOINT POLYMER MOD. ASPHALT m	R.C. PAVEMENT 250 m²	FIELD DRILLED HOLES IN CONCRETE EACH	SURFACE SEAL m²	REMOVAL OF PAVEMENT m²	SUBBASE FOR CEMENT CONCRETE PAVEMENT m³	MASONRY COATING m²	CONCRETE RAILING TRANSITION TGB, MOD. EACH
SOUTHBOUND STRUCTURE																																				
SUBSTRUCTURE																																				
BENT NO. 1			40.0								3888					5	55					40.7				31	14									
BENT NO. 2			52.1		30.4				3886			3	6									110.1	156.4							296						
BENT NO. 3			40.1								3889					5	55					49.4				31	14									
SUPERSTRUCTURE	235.4									97107	29836									63.5	174.2			60.0	240.0	912		48.8			1123.5			27.0		
CONCRETE RAILING								91.0			4212																				362.6			362.6		2
R. C. BRIDGE APPROACH									4337		232															48			320.0			191.3	45.6			
NORTHBOUND STRUCTURE																																				
SUBSTRUCTURE																																				
BENT NO. 1			41.8								3886					5	55					38.6				31	14									
BENT NO. 2			52.1		30.4				3887			3	6									108.8	157.3							296						
BENT NO. 3			40.3								3889					5	55					45.5				31	14									
SUPERSTRUCTURE	235.4									97107	29836									63.5	174.2			60.0	240.0	912		48.8			1123.5			27.0		
CONCRETE RAILING								91.0			4212																				362.6			362.6		2
R. C. BRIDGE APPROACH									4337		232															48			320.0			191.3	45.6			
SLEEPER SLAB									3048																				102.8	80						
TOTALS	470.8		266.4		60.8	132.6		182.0	19495	194214	84112	6	12			20	220			127.0	348.4	393.1	313.7	120.0	480.0	2044	56	97.6	742.8	672	2972.2	382.6	91.2	779.2		4

APPROACH STRUCTURES

BRIDGE FILE

STRUCT. NO.	LOCATION	DESCRIPTION SIZE	DESCRIPTION KIND	LENGTH m	CONC. CL. A IN STRS. m³	REINF. STEEL Kg	PIPE END SEC. EACH		REMARKS
1B	7+982, ℄ "I-65"	150	F.B.C.C.S.Perforated Pipe	18.0					Located at Back Face of Bent No. 1.
2B	7+983, ℄ "I-65"	300	F.B.C.C.S. Pipe	9.0					Connect to Pipe in Place. 2 Type D-6 Inlets Req'd.
3B	8+028, ℄ "I-65"	150	F.B.C.C.S.Perforated Pipe	18.0					Located at Back Face of Bent No. 3.
				TOTALS					Total of Reinforcing Steel Carried to "Structure Quantities"

PAVED SIDE DITCH & SODDING SUMMARY

LT. OR RT.	STATION TO STATION	PAVED SIDE DITCH (m) TYPE	PAY LENGTH	NO. OF LUGS	PAY LENGTH	CUT OFF WALLS	PAY LENGTH	TOTAL PAY LENGTH	SODDING (m²) FOR PSD	FOR DITCHES	SHOULDERS	OTHER	TOTAL SOD

APPROACH TABLE

LOCATION LT/RT	LOCATION STATION	DESCRIPTION	WIDTH m	RADII m	GRADE %	LENGTH m	DIST. BEYOND R/W FT	EXCAVATION(CYS.) CUT	EXCAVATION(CYS.) FILL	BITUM. SURFACE kg/m²	BITUM. SURFACE Mg	BITUM. BINDER kg/m²	BITUM. BINDER Mg	BITUM. BASE kg/m²	BITUM. BASE Mg	COMP. AGG. BASE DEPTH(mm)	COMP. AGG. BASE Mg

NOTES:
Weight of Spirals includes weight of 1 1/2 extra turns top and bottom.
Spacers and 1 1/2 turns at laps included in cost of Spiral.
*** The weight of structural steel is approximate only, and it shall be the Contractor's responsibility to determine the weight on which he bases his bid.
For Test Bar Samples, see Bridge Standard 703-BRST-01.

REVISIONS

DATE	ITEM
9-08-96	Revise Quantities.

DENNIS R. CLARK REGISTERED No. 17234 STATE OF INDIANA PROFESSIONAL ENGINEER

RECOMMENDED FOR APPROVAL Dennis R. Clark 7-15-96
DESIGN ENGINEER DATE

DESIGNED: JHB DRAWN: JHB
CHECKED: DRC CHECKED: DMS

INDIANA DEPARTMENT OF TRANSPORTATION

SUMMARY SHEET
I-65 OVER RAYMOND STREET

HORIZONTAL SCALE	BRIDGE FILE
None	I-65-110-5694A
VERTICAL SCALE	DESIGNATION
None	8462720
SURVEY BOOK	SHEETS
	148 of 301
CONTRACT	PROJECT
R-22528	IM/65-3(258)109