CONTRACT NO. B-21773

# INDIANA DEPARTMENT OF TRANSPORTATION

# BRIDGE PLANS

## FOR SPANS OVER 20 FEET ON NORTH RIVER ROAD OVER I-465

## PROJECT NO. NHI-465-4(284)125

( ) P.E.
( ) R/W
( ) CONSTR.

BRIDGES OVER 20' SPAN

| FEDERAL REGION NO. | STATE | PROJECT NO. | FISCAL YEAR | SHEET NO. | TOTAL SHEETS |
|---|---|---|---|---|---|
| 5 | IND. | NHI-465-4(284)125 | 1995 | 1 | 67 |

### INDEX

| PROJECT | STRUCTURE | TYPE | SPAN | OVER | STATION |
|---|---|---|---|---|---|
| NHI-465-4(284)125 | I-465-127-5275~~B~~ C | RECONSTRUCTION OF CONTINUOUS COMPOSITE STEEL BEAM | 40'-6 7/8, 68'-3 68'-3, 40'-6 7/8 | I-465 | 50+00 "S-23-A" |

| SHEET NO. | SHEET DESIGNATION | SUBJECT | F.H.W.A. APPROVAL |
|---|---|---|---|
| 1 | ONE SHEET | TITLE AND INDEX SHEET | |
| 2 | ONE SHEET | DETOUR ROUTE | |
| 3 | ONE SHEET | TYPICAL CROSS SECTIONS | |
| 4 | ONE SHEET | PLAN AND PROFILE | |
| 5 | ONE SHEET | SUPERELEVATION TRANSITIONS | |
| 6 | ONE SHEET | LAYOUT | |
| 7 | D1 | GENERAL PLAN | |
| 8 | D2 | STRUCTURE SECTION AND GENERAL NOTES | |
| 9 | D3 | BENT NO. 1 AND NO. 5 REMOVAL DETAILS | |
| 10-13 | D4-D7 | BENT NO. 1 AND NO. 5 DETAILS | |
| 14 | D8 | BENT NO. 2, NO. 3 AND NO. 4 REMOVAL DETAILS | |
| 15-17 | D9-D11 | BENT NO. 2, NO. 3 AND NO. 4 DETAILS | |
| 18 | D12 | FRAMING PLAN | |
| 19,20 | D13,D14 | STRUCTURAL STEEL DETAILS | |
| 21 | D15 | FLOOR DETAILS | |
| 22 | D16 | R.C. BRIDGE APPROACH DETAILS | |
| 23 | D17 | CONCRETE BRIDGE RAILING DETAILS | |
| 24 | ONE SHEET | BRIDGE SUMMARY | |
| 25-30 | SIX SHEETS | ROADWAY CROSS SECTIONS | |

B 21773

| TRAFFIC DATA | | |
|---|---|---|
| A.D.T. (1994) | | 6200 V.P.D. |
| A.D.T. (2014 PROJECTED) | | 16200 V.P.D. |
| D.H.V. (19 PROJECTED) | | V.P.H. |
| TRUCKS | D.H.V. % | A.D.T. % |
| DESIGN SPEED | | 40 M.P.H. |
| ACCESS CONTROL | | NONE |
| FUNCTIONAL CLASSIFICATION | | URBAN COLLECTOR |

BRIDGE LENGTH: 0.041 MI.
ROADWAY LENGTH: 0.186 MI.
TOTAL LENGTH: 0.227 MI.
MAX. GRADE: 5.20 %

BRIDGE REHABILITATION ON STRUCTURE NO. I-465-127-5275~~A~~B LOCATED IN SECTION 17, T17N, R4E, WASHINGTON TWP., MARION COUNTY AT R.P. 43+93

BEGIN PROJECT
STA. 44+50 "S-23-A"

I-465-127-5275~~B~~C
CONTINUOUS STEEL BEAM BRIDGE
4 SPANS @ 40'-6 7/8, 68'-3, 68'-3, 40'-6 7/8
SKEW 17° 33' 40" RT. CL. RDWY 36'-0

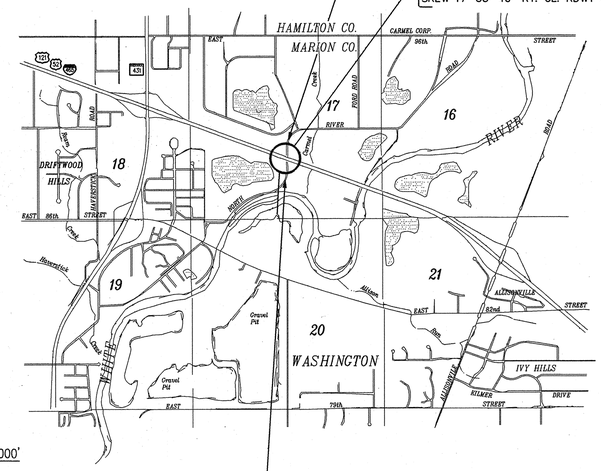


SCALE: 1"=2000'

END PROJECT
STA. 56+50 "S-23-A"

NOTE
WHENEVER NH-465-4(284)125
APPEARS ON THESE PLANS OR CONTRACT DOCUMENTS
IT SHALL BE INTERPRETED AS NHI-465-4(284)125

### INDEX CONTINUED
STANDARD DRAWINGS

| SHEET NO. | SHEET DESIGNATION | SUBJECT | F.H.W.A. APPROVAL | ADOPTED "A" REVISION "R" |
|---|---|---|---|---|
| 31 | BRIDGE STD. SHEET BR-1 | CONCRETE BRIDGE RAILING TRANSITION TYPE TGB | 3-9-93 | A-AUG 1992 |
| 32 | BRIDGE STD. SHEET BR-1A | CONCRETE BRIDGE RAILING TRANSITION TYPE TGB | 3-9-93 | A-AUG 1992 |
| | BRIDGE STD. SHEET BR-2 | CONCRETE BRIDGE RAILING TRANSITION TYPE WGB | | |
| | BRIDGE STD. SHEET BR-2A | CONCRETE BRIDGE RAILING TRANSITION TYPE WGB | | |
| 33 | BRIDGE STD. SHEET C-1 | MISCELLANEOUS DETAILS | 1-26-93 | A-DEC 1992 |
| | BRIDGE STD. SHEET C-2 | MISCELLANEOUS DETAILS | | |
| 34 | BRIDGE STD. SHEET C-3 | MISCELLANEOUS DETAILS | 1-26-93 | A-NOV 1992 |
| | BRIDGE STD. SHEET C-4 | MISCELLANEOUS DETAILS | | |
| 35 | BRIDGE STD. SHEET C-5 | PRECAST DECK PANEL DETAILS | PENDING | R-10-3-94 |
| | BRIDGE STD. SHEET D | CASTING DETAILS ROADWAY DRAINS | | |
| | BRIDGE STD. SHEET D1 | ADJUSTING FRAME DETAILS FOR ROADWAY DRAINS | | |
| | BRIDGE STD. SHEET PB | PRESTRESSED CONCRETE TYPE I-BEAMS | | |
| | BRIDGE STD. SHEET PB | PRESTRESSED CONCRETE TYPE I-BEAMS | | |
| | BRIDGE STD. SHEET PB6 | PRESTRESSED BOX BEAMS | | |
| | BRIDGE STD. SHEET PB | PRESTRESSED COMPOSITE BOX BEAMS WIDE | | |
| | BRIDGE STD. SHEET PB | PRESTRESSED COMPOSITE BOX BEAMS WIDE | | |
| | BRIDGE STD. SHEET PB10 | TOLERANCES FOR FABRICATION OF PRESTRESSED BEAMS | | |
| | BRIDGE STD. SHEET PB11 | ELASTOMERIC BEARING PAD DETAILS | | |
| | BRIDGE STD. SHEET R2B | BRIDGE LIGHTING DETAILS | | |
| 36 | BRIDGE STD. SHEET S-1 | B BORROW PLACEMENT | 1-22-87 | R-12-01-86 |
| 37 | BRIDGE STD. SHEET SH1 | STEEL SHOE DETAILS | 2-1-85 | R-10-29-84 |
| | BRIDGE STD. SHEET SS-1 | STRUCTURAL EXPANSION JOINTS CLASS SS, SHEET 1 | | |
| | BRIDGE STD. SHEET SS-2 | STRUCTURAL EXPANSION JOINTS CLASS SS, SHEET 2 | | |
| | BRIDGE STD. SHEET TA | STANDARD TEMPORARY BRIDGE SHEET A | | |
| | BRIDGE STD. SHEET TB | STANDARD TEMPORARY BRIDGE SHEET B | | |
| | BRIDGE STD. SHEET | | | |
| | BRIDGE STD. SHEET | | | |
| | BRIDGE STD. SHEET | | | |
| | ROAD STD. SHEET | MISCELLANEOUS STANDARDS | | |
| | ROAD STD. SHEET | MISCELLANEOUS STANDARDS | | |
| | ROAD STD. SHEET | MISCELLANEOUS STANDARDS | | |
| | ROAD STD. SHEET | MISCELLANEOUS STANDARDS | | |
| | ROAD STD. SHEET | MISCELLANEOUS STANDARDS | | |
| | ROAD STD. SHEET | MISCELLANEOUS STANDARDS | | |
| | ROAD STD. SHEET | MISCELLANEOUS STANDARDS | | |
| | ROAD STD. SHEET | MISCELLANEOUS STANDARDS | | |
| 38 | ROAD STD. SHEET ME-1A | MULTIPLE PIPE CONCRETE ANCHORS | 2-19-93 | A-JAN 1993 |
| 39 | ROAD STD. SHEET MU | STRUCTURE CONNECTIONS FOR EXTENSION | 6-27-85 | R-9-4-84 |
| | ROAD STD. SHEET | MISCELLANEOUS STANDARDS | | |
| 40 | ROAD STD. SHEET MB-2 | BRIDGE SLOPEWALL | 5-21-82 | R-4-1-82 |
| 41 | ROAD STD. SHEET MN | UNDERDRAINS | 9-24-85 | R-6-3-85 |
| | ROAD STD. SHEET JTS-A | STANDARD PAVEMENT JOINTS | | |
| 42 | ROAD STD. SHEET RCBA-1 | REINFORCED CONCRETE BRIDGE APPROACH | PENDING | A-11-1-94 |
| 43 | ROAD STD. SHEET G-1 | W-BEAM GUARDRAIL COMPONENTS | 3-9-93 | A-AUG 1992 |
| 44 | ROAD STD. SHEET G-2 | THRIE-BEAM GUARDRAIL COMPONENTS | 7-20-92 | A-DEC 1991 |
| 45 | ROAD STD. SHEET G-3 | W-BEAM GUARDRAIL ASSEMBLIES | 7-20-92 | A-DEC 1991 |
| 46 | ROAD STD. SHEET T-1 | GUARDRAIL TRANSITION TYPE TGB | 3-9-93 | A-AUG 1992 |
| | ROAD STD. SHEET T-1A | GUARD RAIL TRANSITION TYPE WGB | | |
| 47 | ROAD STD. SHEET T-2 | GUARDRAIL TRANSITION TYPE GP | 3-9-93 | A-AUG 1992 |
| 48 | ROAD STD. SHEET T-3 | GUARDRAIL TRANSITION TYPE VH | 3-9-93 | A-AUG 1992 |
| 49 | ROAD STD. SHEET T-4 | PIER CONNECTION DETAILS | 7-20-92 | A-DEC 1991 |
| | ROAD STD. SHEET E-1 | GUARDRAIL END TREATMENT TYPE I | 7-20-92 | A-DEC,1991 |
| ~~50~~ | ROAD STD. SHEET E-2 | GUARDRAIL END TREATMENT TYPE OS | ~~7-20-92~~ | ~~A-DEC 1991~~ |
| | ROAD STD. SHEET E-3 | GUARDRAIL END TREATMENT TYPE MS | | |
| | ROAD STD. SHEET E-4 | CURVED W-BEAM GUARDRAIL SYSTEM | | |
| | ROAD STD. SHEET E-4A | CURVED W-BEAM GUARDRAIL SYSTEM | | |
| | ROAD STD. SHEET E-4B | CURVED W-BEAM GUARDRAIL SYSTEM | | |
| | ROAD STD. SHEET H-1 | TWO-WAY TWO-LANE ROADSIDE HAZARD PROTECTION GUARDRAIL | | |
| | ROAD STD. SHEET H-2 | MULTI-LANE DIVIDED ROADSIDE HAZARD PROTECTION GUARDRAIL | | |
| 51 | ROAD STD. SHEET B-1 | BRIDGE APPROACH GUARDRAIL | 3-9-93 | A-AUG 1992 |
| | ROAD STD. SHEET P-1 | TWO-WAY TWO-LANE ROADSIDE PIER PROTECTION GUARDRAIL | | |
| 52 | ROAD STD. SHEET P-2 | MULTI-LANE DIVIDED ROADSIDE PIER PROTECTION GUARDRAIL | 3-9-93 | A-AUG 1992 |
| | ROAD STD. SHEET P-3 | MULTI-LANE DIVIDED MEDIAN SIDE PIER PROTECTION GUARDRAIL | | |
| | ROAD STD. SHEET P-4 | MULTI-LANE DIVIDED MEDIAN PIER PROTECTION GUARDRAIL | | |
| | ROAD STD. SHEET GR10B | W-BEAM GUARD RAIL TERMINAL SECTION | | |
| 53 | ROAD STD. SHEET CB2 | TEMPORARY CONCRETE BARRIER | 1-21-94 | A-NOV 1993 |
| 54 | ROAD STD. SHEET CB2A | TEMPORARY CONCRETE BARRIER | 1-21-94 | A-NOV 1993 |
| 55 | ROAD STD. SHEET 1 DETOURS | STANDARD DETOUR SIGNS | PENDING | A-SEP 1988 |
| | ROAD STD. SHEET 1A DETOURS | STANDARD DETOUR SIGNS | | |
| 56 | ROAD STD. SHEET DET-1B | LANE CLOSURES FOR 6 LANE ROADS | PENDING | A-SEP 1988 |
| 57 | ROAD STD. SHEET DET-2 | MARKING DETOURS; LANE CLOSURES FOR 2 LANE ROADS | 6-20-91 | R-4-1-91 |
| 58 | ROAD STD. SHEET DET-2A | STANDARD DETOUR SIGNS | PENDING | A-SEP 1988 |
| 59 | ROAD STD. SHEET DET-3 | SIGN DESIGN DETAILS | PENDING | R-9-1-88 |
| 60 | ROAD STD. SHEET DET-3A | SIGN DESIGN DETAILS (WITH TABLES) | PENDING | R-9-1-88 |
| 61 | ROAD STD. SHEET DET-4 | SIGN DESIGN DETAILS | 1-11-89 | R-9-1-88 |
| 62 | ROAD STD. SHEET DET-5 | SIGN DESIGN DETAIL TABLES | PENDING | R-9-1-88 |
| 63 | ROAD STD. SHEET DET-5A | SIGN DESIGN DETAIL TABLES | PENDING | R-9-1-88 |
| 64 | TRAFFIC STD. SHEET MT-1 | SIGN PANEL DETAILS | PENDING | R-5-1-89 |
| 65 | TRAFFIC STD. SHEET MT-1A | WIDE FLANGE SIGN POST INSTALLATION | 8-5-88 | R-8-1-88 |
| 66 | TRAFFIC STD. SHEET MT-2 | MISCELLANEOUS STANDARDS | 6-28-89 | R-5-1-89 |
| 67 | TRAFFIC STD. SHEET MT-3 | MISCELLANEOUS STANDARDS | 8-5-88 | R-8-1-88 |

THESE PLANS PREPARED BY:
FINK ROBERTS & PETRIE, INC.
3307 West 96th Street
Indianapolis, Indiana 46268
317-872-8400 Tele 317-876-2408 Fax

DATE: December 7, 1994

CERTIFIED BY: David T. Lash

DAVID T. LASH REGISTERED No. 20470 STATE OF INDIANA PROFESSIONAL ENGINEER

APPROVED FOR LETTING: 1/27/95
Phelps H. Kline
CHIEF, DIVISION OF DESIGN, INDIANA DEPARTMENT OF TRANSPORTATION

FEDERAL HIGHWAY ADMINISTRATION
DEPARTMENT OF TRANSPORTATION
APPROVED:-
DIVISION ADMINISTRATOR DATE

BRIDGE FILE:- I-465-127-5275~~B~~C

INDIANA DEPARTMENT OF TRANSPORTATION
STANDARD SPECIFICATIONS DATED 1993
TO BE USED WITH THESE PLANS.

| REVISIONS | |
|---|---|
| DATE | SHEET NO. |
| 1-25-95 | Rev. Sheet No. 1, 4, Dwg. D2. |
| 3-24-95 | Rev. Sheet No. 1,3 |
| 9-26-95 | Rev. Sht. 6; Delete Shts. 26,27,28 & 29. Add Shts. 26A, 27A, 28A & 29A |

| REVISIONS | |
|---|---|
| DATE | SHEET NO. |

DES. NO. 9139945

1-25-95 Rev. Index

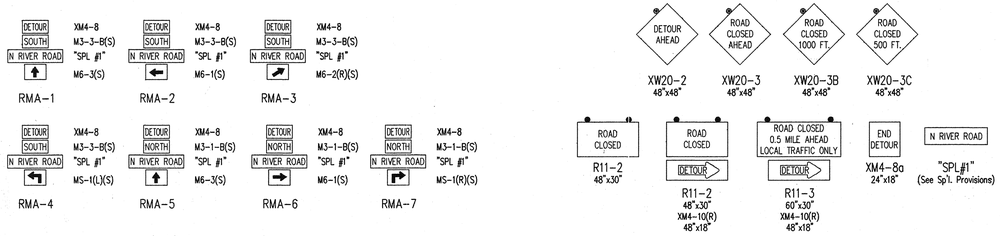


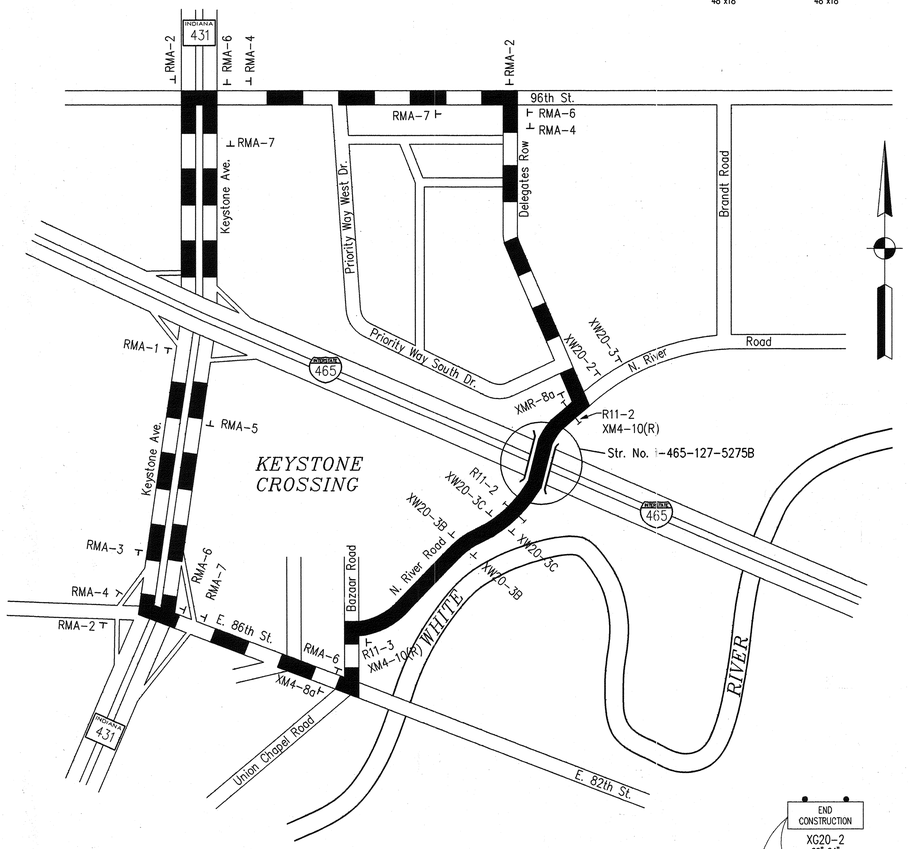


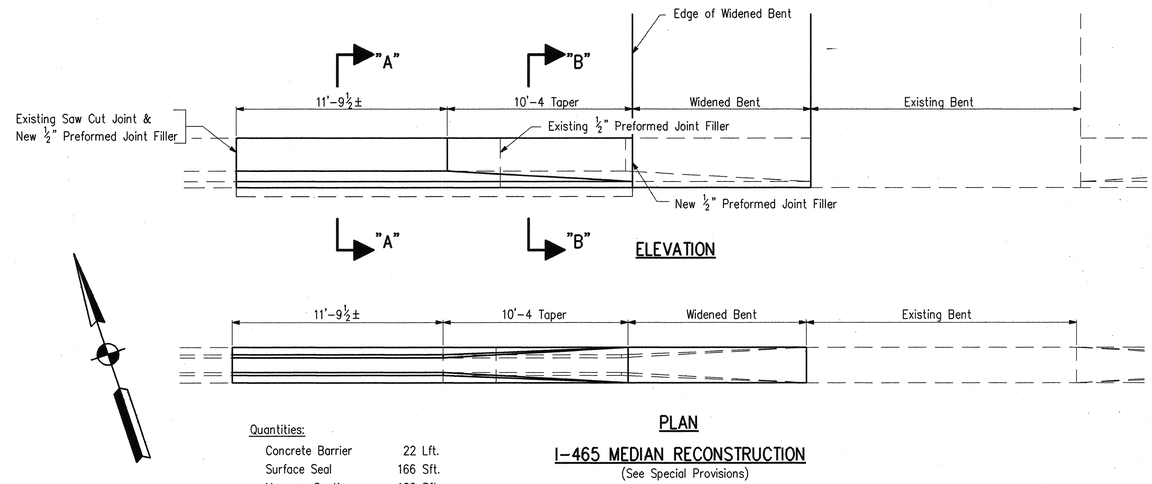


Quantities:

| | |
|---|---|
| Concrete Barrier | 22 Lft. |
| Surface Seal | 166 Sft. |
| Masonry Coating | 166 Sft. |

## PLAN

## I-465 MEDIAN RECONSTRUCTION

(See Special Provisions)

## DETOUR NOTES

See Road Standard Sheet 1 Detours for additional details.

Road Closure Signs XG 20-5 (60"x36") are required. Estimated Quantity = 2 Each.

All Type "A" Construction Signs shall be delineated with a Type A Construction Warning Light. (Not a Pay Item)

See Road Standard Sheet Det-1B for additional details of Daylight Lane Closures.

## SUMMARY OF QUANTITIES

| ITEM | QUANTITY |
|---|---|
| Type "A" Construction Sign | 11 Each |
| Type "B" Construction Sign | 3 Each |
| Type IIIA Barricade | 2 Each |
| Detour Route Assembly | 16 Each |

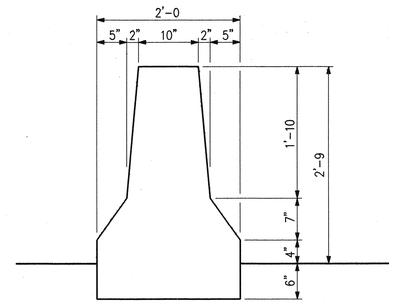


## SECTION "A-A"

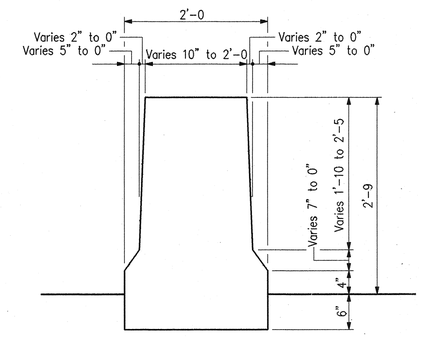


## SECTION "B-B"

## LEGEND

- Indicates Detour Route
- Indicates Road to be Closed
- Type IIIA Barricade
- Construction Warning Light Type "A" (Not a Pay Item)
- Construction Warning Light Type "B" (Not a Pay Item)
- Construction Sign

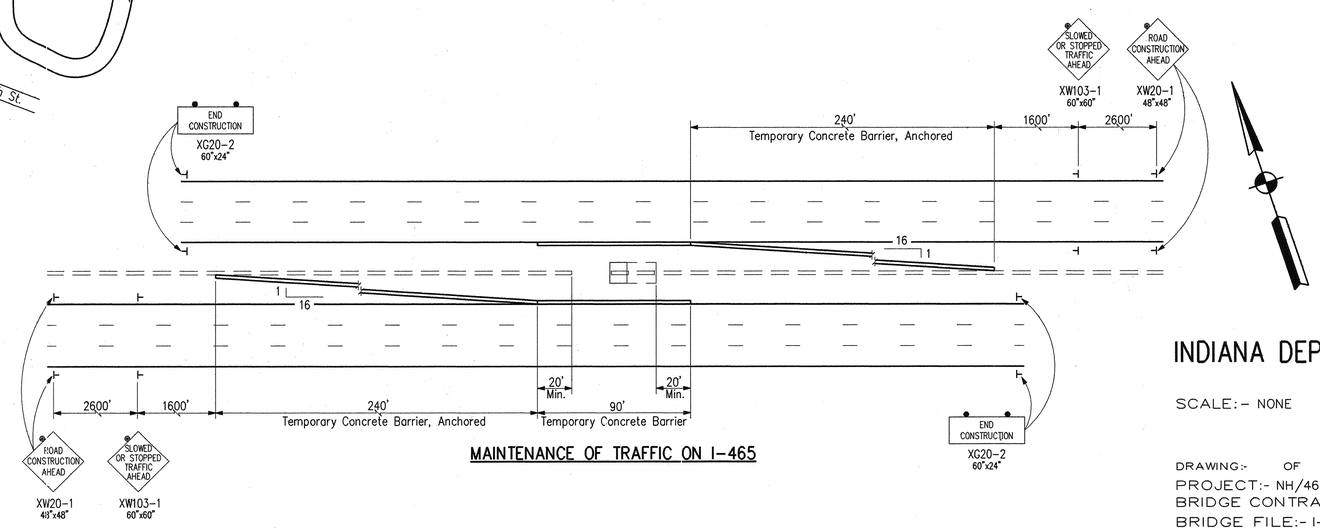


## MAINTENANCE OF TRAFFIC ON I-465

Quantities:

| | |
|---|---|
| Temporary Concrete Barrier | 180 Lft. |
| Temporary Concrete Barrier, Anchored | 480 Lft. |
| Type "A" Construction Sign | 6 Each |

## DETOUR ROUTE

# INDIANA DEPARTMENT OF TRANSPORTATION

MARION COUNTY

SCALE:- NONE

DATE:- December 7, 1994

Dennis R. Clark

DENNIS R. CLARK REGISTERED No. 17234 STATE OF INDIANA PROFESSIONAL ENGINEER

DRAWING:- OF SHEET:- 2 OF 67

PROJECT:- NH/465-4(284)125

BRIDGE CONTRACT NO. B-21773

BRIDGE FILE:- I-465-127-5275B

| | | | |
|---|---|---|---|
| DESIGNED | DRC | C'K'D | PEB |
| DRAWN | RGS | C'K'D | DRC |
| TRACED | | C'K'D | |

| FEDERAL ROAD REGION | STATE | PROJECT NO. | FISCAL YEAR | SHEET NO. | TOTAL SHEETS |
|---|---|---|---|---|---|
| 5 | IND | NH/465-4(284)125 | 1995 | 3 | 67 |

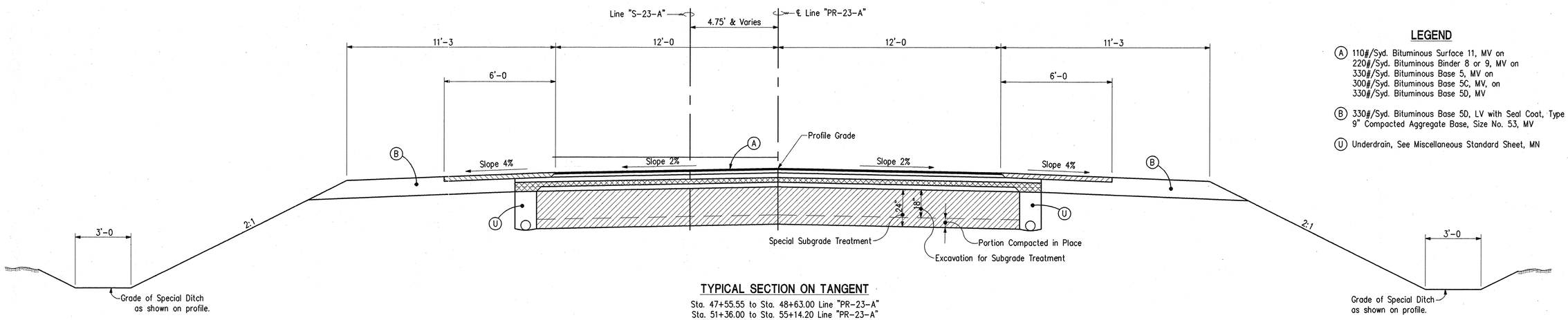


## TYPICAL SECTION ON TANGENT

Sta. 47+55.55 to Sta. 48+63.00 Line "PR-23-A"
Sta. 51+36.00 to Sta. 55+14.20 Line "PR-23-A"

## LEGEND

(A) 110#/Syd. Bituminous Surface 11, MV on
220#/Syd. Bituminous Binder 8 or 9, MV on
330#/Syd. Bituminous Base 5, MV on
300#/Syd. Bituminous Base 5C, MV, on
330#/Syd. Bituminous Base 5D, MV

(B) 330#/Syd. Bituminous Base 5D, LV with Seal Coat, Type 2 on 9" Compacted Aggregate Base, Size No. 53, MV

(U) Underdrain, See Miscellaneous Standard Sheet, MN

Note: Bituminous Material For Tack Coat shall be applied on new bituminous surfaces before a new lift of bituminous material is added.

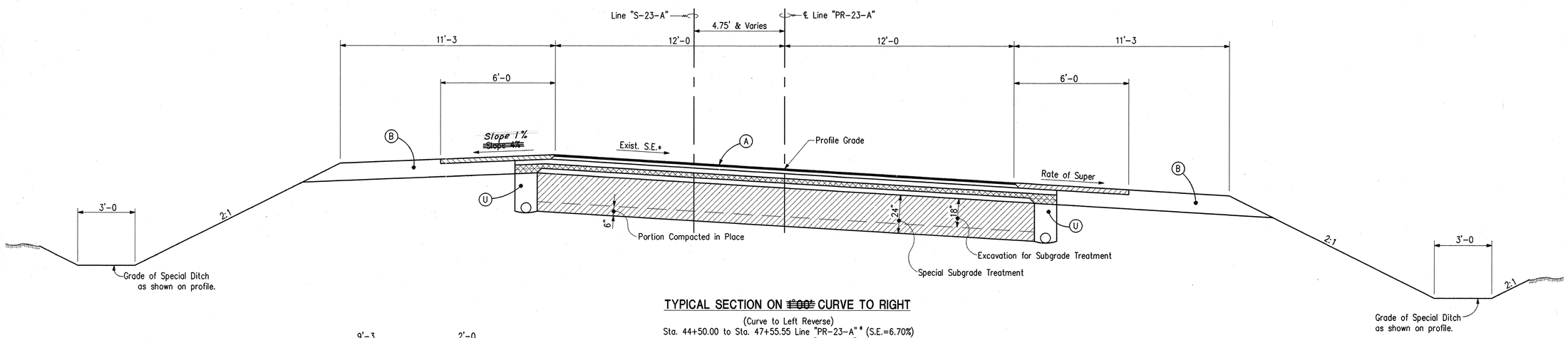


## TYPICAL SECTION ON ~~1°00'~~ CURVE TO RIGHT

(Curve to Left Reverse)
Sta. 44+50.00 to Sta. 47+55.55 Line "PR-23-A" * (S.E.=6.70%)
Sta. 55+14.20 to Sta. 56+50.33 Line "PR-23-A" * (S.E.=6.70%)

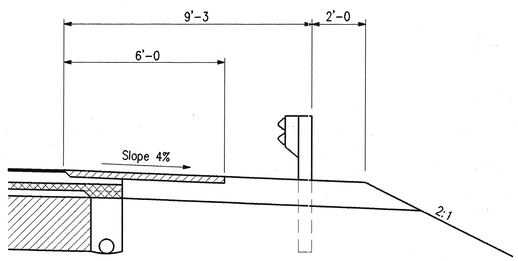


## TYPICAL GUARDRAIL SECTION

# NORTH RIVER ROAD OVER I-465

INDIANA DEPARTMENT OF TRANSPORTATION

# TYPICAL CROSS SECTIONS

SCALE: – 3/8" = 1'-0

SF-22397

3-24-95 Revise Shoulder Slope on high side of Superelevated Section.

CONTRACT NO. B-21773

| PROJECT NO. | LINE | SHEET NO. | TOTAL SHEETS | FILE |
|---|---|---|---|---|
| NH/465-4(284)125 | "S-23-A" | 3 | 67 | |

| FEDERAL ROAD REGION | STATE | PROJECT NO. | FISCAL YEAR | SHEET NO. | TOTAL SHEETS |
|---|---|---|---|---|---|
| 5 | IND | NH/465-4(284)125 | 1995 | 4 | 67 |

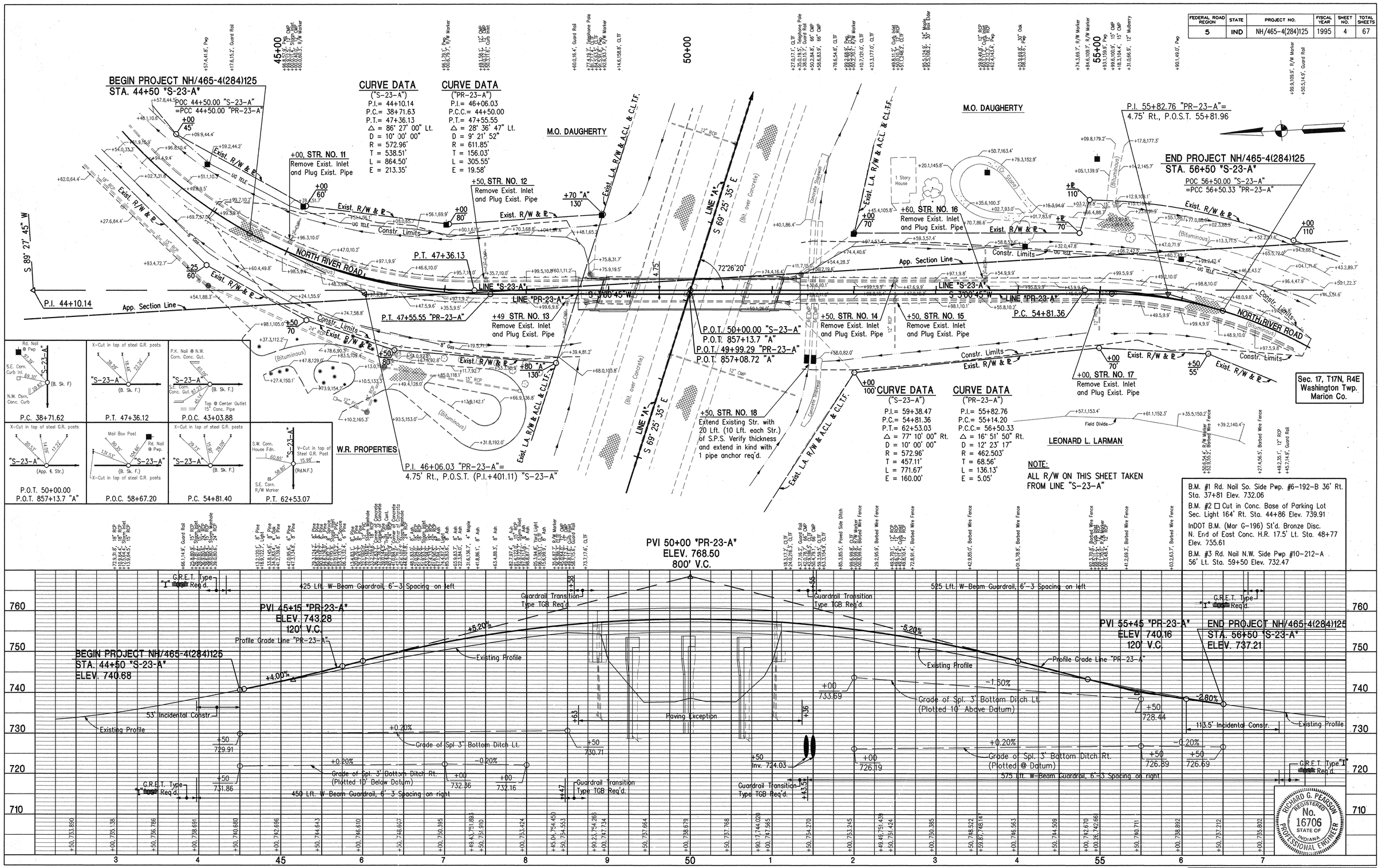


| PROJECT NO. | LINE | SHEET NO. | TOTAL SHEETS | FILE |
|---|---|---|---|---|
| NH/465-4(284)125 | "S-23-A" | 4 | 67 | |

1-25-95 Rev. G.R.E.T.s

PLATE 3—PLAN—PROFILE B. R. R. STANDARD
1975

CONTRACT NO. B-21773

PLAN
NOTE BOOK No.
SURVEYED
PLOTTED
ALIGNMENT CHECKED
RT. OF WAY CHECKED
BY: InDOT PARK, ROBERTS, & PETRIE, INC.
DATE

PROFILE
NOTE BOOK No.
SURVEYED
PLOTTED
GRADES CHECKED
B. M.'s NOTED
STRUCTURE NOTATIONS CHECKED
BY: InDOT PARK, ROBERTS, & PETRIE, INC.
DATE

TP116

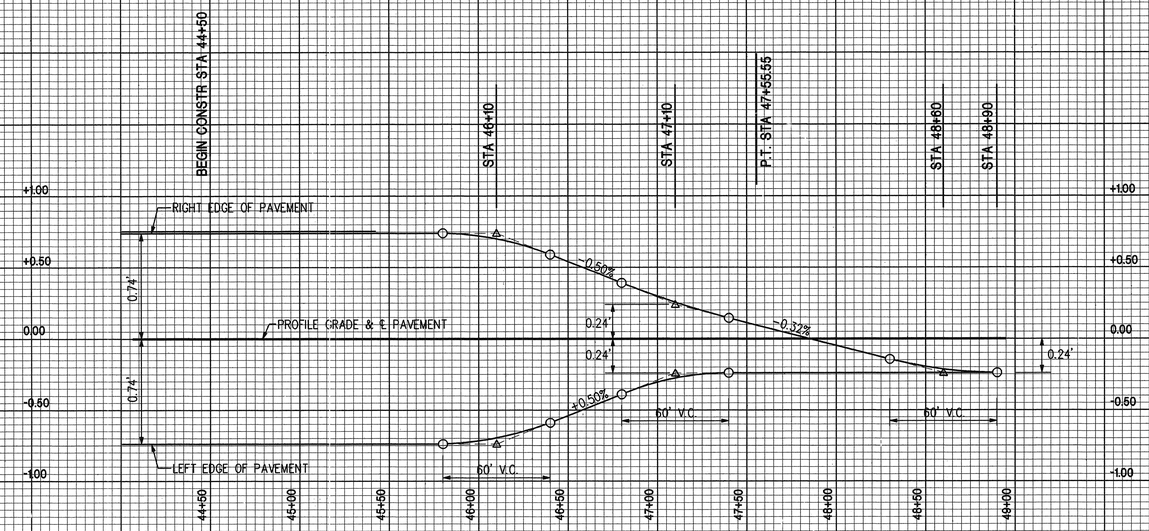


P.I. 46+06.03 "PR-23-A"
9°21'52" CURVE
S.E. = 6.7%
DESIGN SPEED: 40 M.P.H.

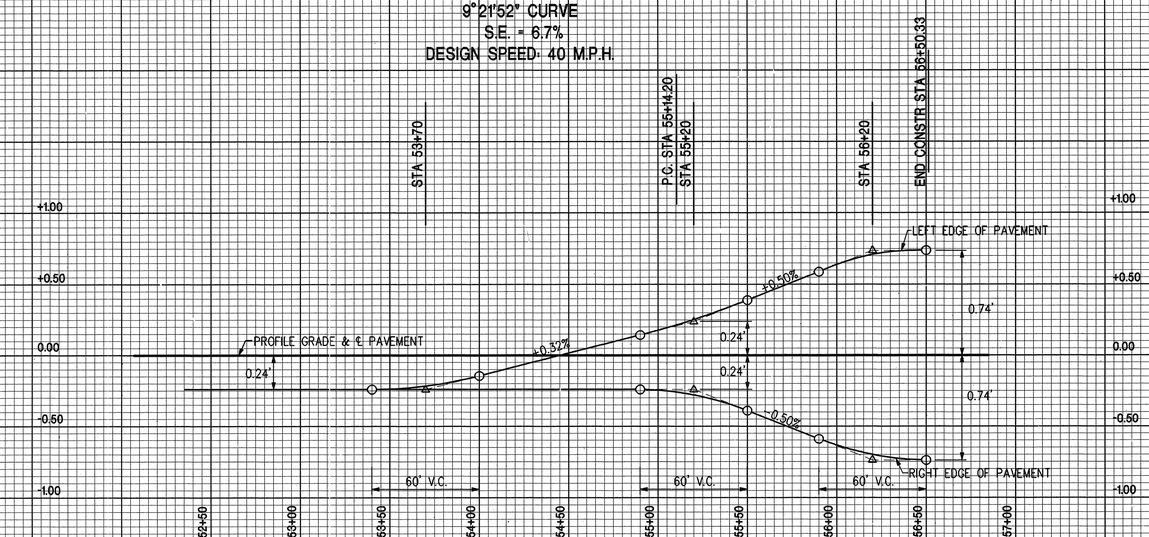


P.I. 55+82.76 "PR-23-A"
12°23'17" CURVE
S.E. = 6.7%
DESIGN SPEED: 40 M.P.H.

# SUPERELEVATION TRANSITION DETAILS

SCALE: HORIZ: 1"=40'-0"
VERT: 1"=0.5'

CONTRACT NO. B-21773

| FEDERAL ROAD REGION | STATE | PROJECT NO. | FISCAL YEAR | SHEET NO. | TOTAL SHEETS |
|---|---|---|---|---|---|
| 5 | IND | NH/465-4(284)125 | 1995 | 5 | 67 |

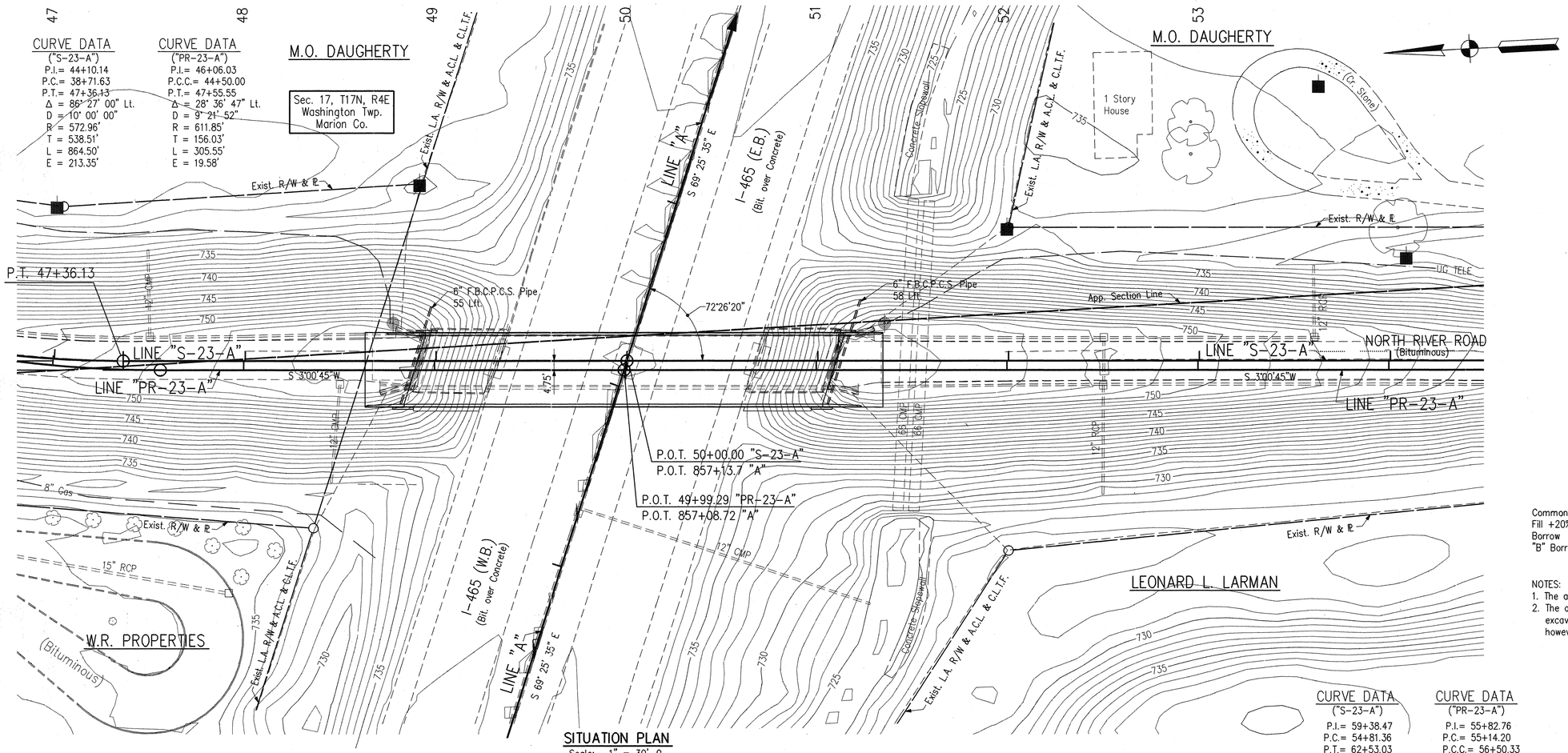


## SITUATION PLAN

Scale: – 1" = 30'–0
Contour Interval = 1'–0

## PRESENT STRUCTURE

Continuous Steel Beam Bridge
4 Spans @ 40'–0, 2 @ 68'–3 and 40'–0
25'–6 Clear Roadway – Skew 17°33'40" Rt.

## UTILITY OWNERS

Electric:
Indianapolis Power and Light Co.
P.O. Box 15958
Indianapolis, In. 46206

Gas:
Citizens Gas and Coke Utility
2020 N. Meridian St.
Indianapolis, In. 46202

Telephone:
Indiana Bell Tel. Co. (Ameritech)
5870 N. College Ave.
Indianapolis, In. 46220

## EARTHWORK SUMMARY

| | |
|---|---|
| Common Excavation | ~~17,032 Cyds.~~ 6,252 Cyds. |
| Fill +20% | ~~32,150 Cyds.~~ 19,226 Cyds. |
| Borrow | ~~15,128 Cyds.~~ 12,697 Cyds. |
| "B" Borrow for Structure Backfill | 277 Cyds. |

NOTES:
1. The above quantities Include ~~40,372 Cyds.~~ 5,602 Cyds. of Benching.
2. The above quantities do not include any quantities for the excavation and backfilling of areas requiring "Special Subgrade Treatment"; however, Excavation for Subgrade Treatment" is estimated at 338 Cyds.

CURVE DATA
("S-23-A")
P.I.= 59+38.47
P.C.= 54+81.36
P.T.= 62+53.03
Δ = 77° 10' 00" Rt.
D = 10° 00' 00"
R = 572.96'
T = 457.11'
L = 771.67'
E = 160.00'

CURVE DATA
("PR-23-A")
P.I.= 55+82.76
P.C.= 55+14.20
P.C.C.= 56+50.33
Δ = 16° 51' 50" Rt.
D = 12° 23' 17"
R = 462.503'
T = 68.56'
L = 136.13'
E = 5.05'

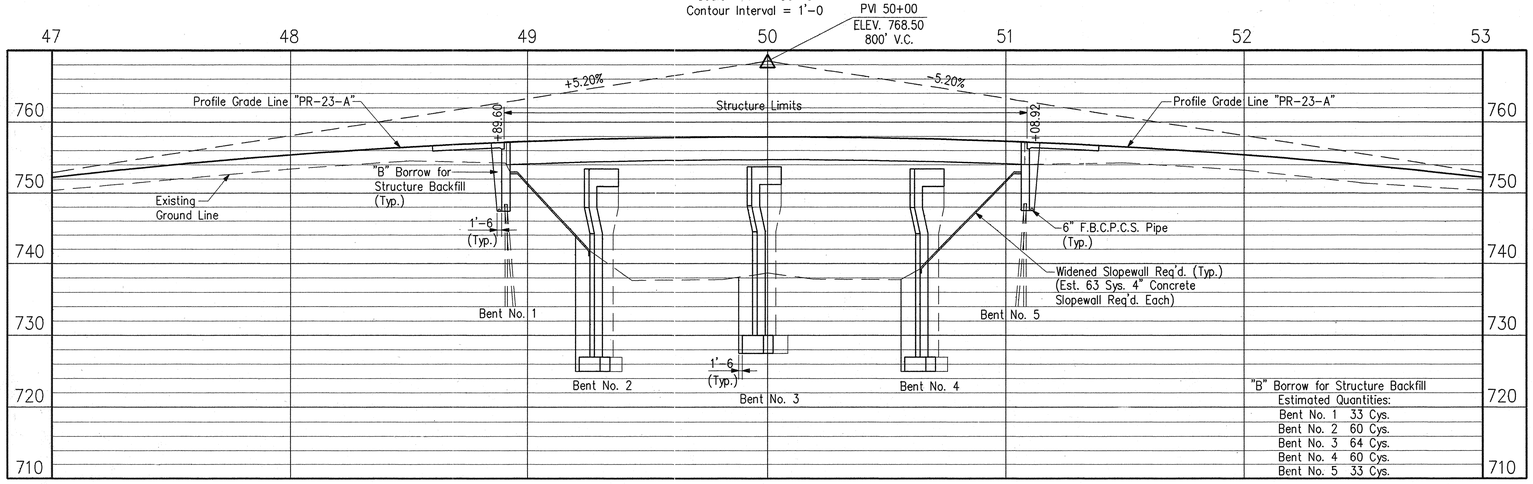


## PROFILE

Scale: – 1"=30'–0 Horiz.
1"=10'–0 Vert.

Note: Field Notes Book BR-3280

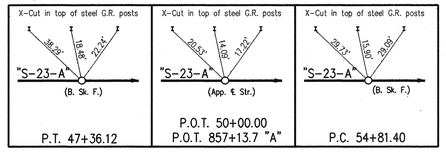


## LAYOUT

# INDIANA DEPARTMENT OF TRANSPORTATION

MARION COUNTY

SCALE:– As Noted

DATE:– December 7, 1994

Dennis R. Clark

DENNIS R. CLARK REGISTERED No. 17234 STATE OF INDIANA PROFESSIONAL ENGINEER

DRAWING:– OF SHEET:– 6 OF 67
PROJECT:– NH/465-4(284)125 STATION:–
BRIDGE CONTRACT NO. B-21773
BRIDGE FILE:– I-465-127-52759C

| | | | |
|---|---|---|---|
| DESIGNED | DPJ | C'K'D | DRC |
| DRAWN | PCR | C'K'D | DRC |
| TRACED | | C'K'D | |

9-26-95 Revise Earthwork Summary

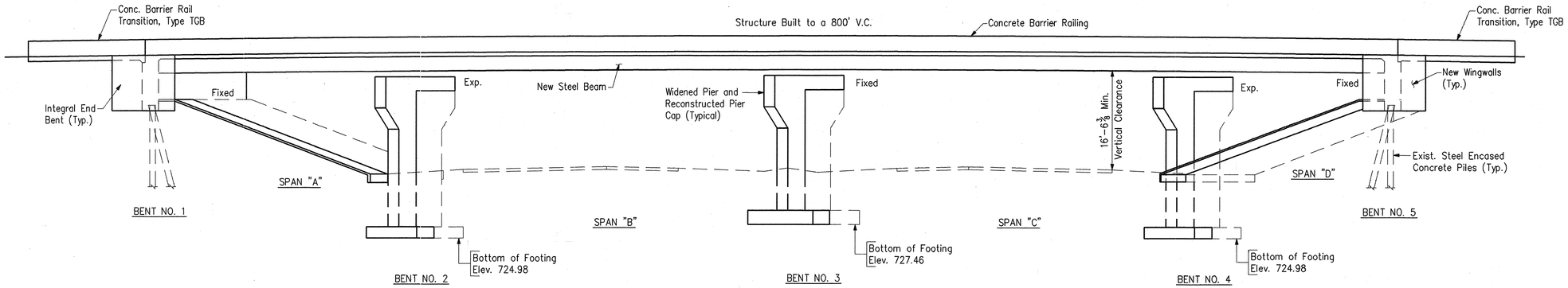


## ELEVATION

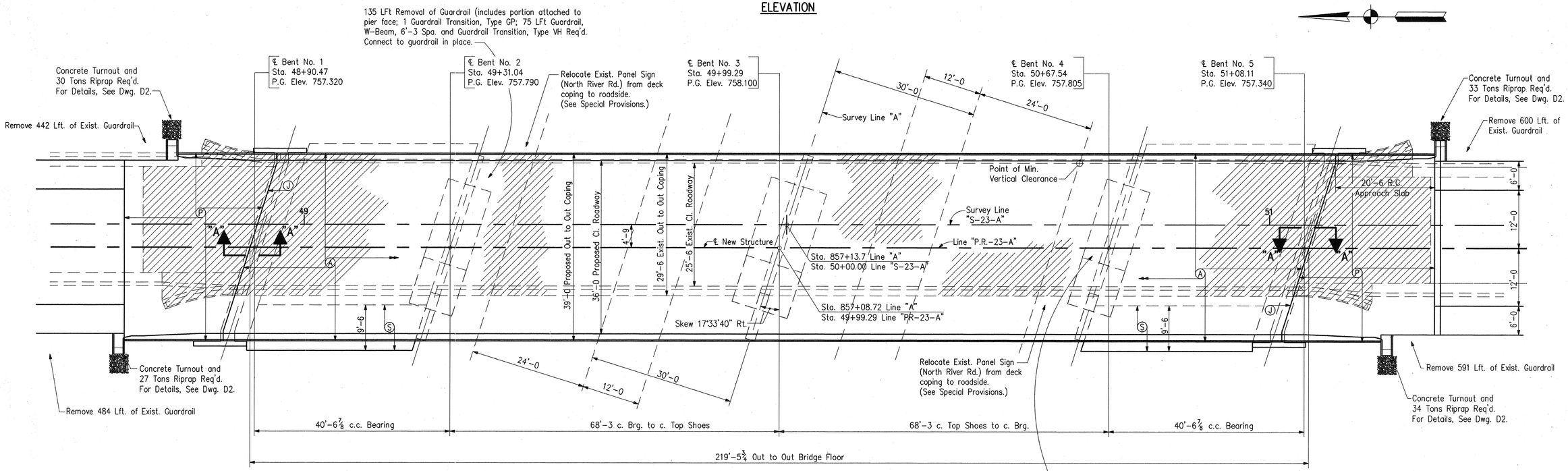


## PLAN

## DESIGN DATA

Live Load: HS20-44 Loading with impact and distribution of loads in accordance with 1992 AASHTO specifications and all interim specifications.

Dead Load: Actual weight plus 35#/Sft. for future wearing surface and 15#/Sft. for stay-in-place forms.

Slab: Designed for 16,000 Lbs. wheel plus impact with a 6½" Structural Depth plus a 1½" wearing surface.

## LEGEND

Ⓐ Reinforced Concrete Bridge Deck (See Dwg. D15).

Ⓙ Type IA Joint.

Ⓟ 10" Reinforced Concrete Pavement (See Dwg. D16).

Ⓢ 4" Concrete Slopewall

Concrete Removal Items

## NOTES

See Dwg. D2 for existing and proposed sections and Section "A-A".

See Sht. 4 for Limits of New Guardrail.

## GENERAL PLAN

CONTINUOUS STEEL BEAM BRIDGE
4 SPANS: 40'-6⅞, 2 @ 68'-3, 40'-6⅞,
36'-0 CLEAR ROADWAY SKEW: 17°33'40" RIGHT
NORTH RIVER ROAD OVER I-465

# INDIANA DEPARTMENT OF TRANSPORTATION

MARION COUNTY

SCALE:- 1" = 10'-0 DATE:- December 7, 1994

Dennis R. Clark

DRAWING:- D1 OF 17 SHEET:- 7 OF 67

PROJECT:- NH/465-4(284)125 STATION:- 50+00.00

BRIDGE CONTRACT NO. B-21773

BRIDGE FILE:- I-465-127-5275B C

DENNIS R. CLARK REGISTERED No. 17234 STATE OF INDIANA PROFESSIONAL ENGINEER

| | | | |
|---|---|---|---|
| DESIGNED | DPJ | C'K'D | DRC |
| DRAWN | PCR | C'K'D | DRC |
| TRACED | | C'K'D | |

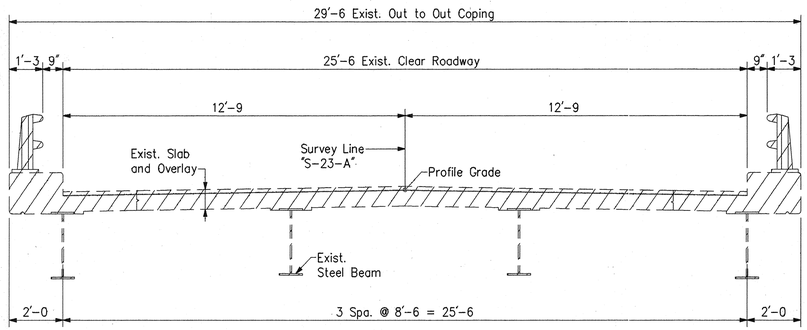


Limits of Removal Areas

## EXISTING SECTION

(Showing Limits of Removal)

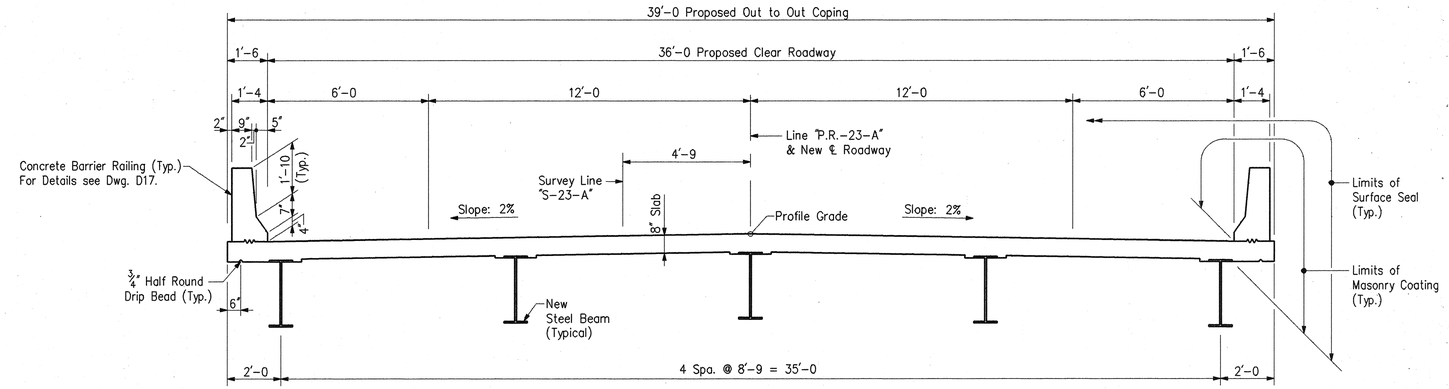


## PROPOSED SECTION

(Showing Limits of New Construction)

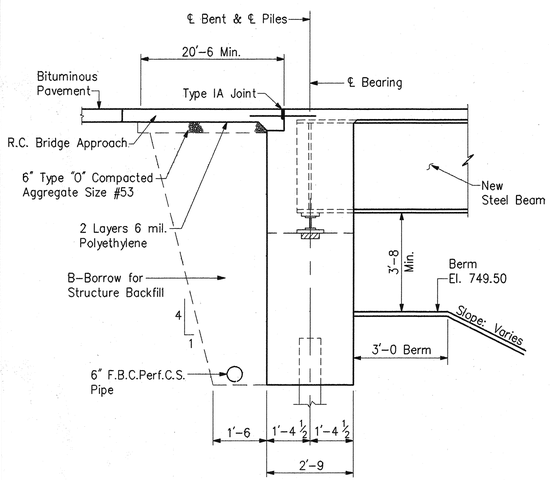


## SECTION "A-A"

No Scale

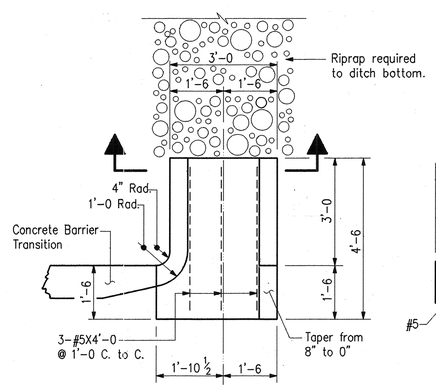


## PLAN

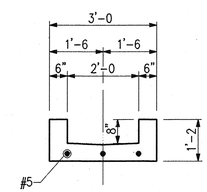


## SECTION

## CONCRETE TURNOUT DETAILS

Scale: 1/2" = 1'-0

## STANDARD DRAWING TABLE

| BRIDGE | ROAD | TRAFFIC | PURPOSE |
|---|---|---|---|
| BR-1 | | | Concrete Bridge Rail Transition, Type TGB |
| BR-1A | | | Concrete Bridge Rail Transition, Type TGB |
| C1 | | | Reinforcing Bar Notes, Bar Bending Details, Pile Splicing |
| C3 | | | Construction Joint, Type A & Type IA |
| C5 | | | Precast Deck Panel Details |
| S1 | | | "B" Borrow Treatment at End Bents |
| SH1 | | | Steel Shoe Details |
| | RCBA-1 | | Reinforcing for Bridge Approach |
| | MB2 | | Concrete Slopewall |
| | ME1A | | Pipe Anchors |
| | MN | | Underdrains |
| | MU | | Pipe Extensions |
| | G1 | | W-Beam Guardrail Components |
| | G2 | | Thrie-Beam Guardrail Components |
| | G3 | | W-Beam Guardrail Components |
| | T-1 | | Guardrail Transition Type TGB |
| | T-2 | | Guardrail Transition, Type GP |
| | T-3 | | Guardrail Transition, Type VH |
| | T-4 | | Pier Connection Details |
| | ~~E2~~ E1 | | Guardrail End Treatment, Type ~~OS-~~ I |
| | B1 | | Bridge Approach Guardrail |
| | P-2 | | Multi-Lane Divided Roadside Pier Protection Guardrail |
| | CB2 | | Temporary Concrete Barrier |
| | CB2A | | Temporary Concrete Barrier |
| | 1 Detours | | Standard Detour Sign |
| | 1B Detours | | Standard Detour Sign |
| | 2 Detours | | Standard Detour Sign |
| | 2A Detours | | Standard Detour Sign |
| | 3 Detours | | Standard Detour Sign |
| | 3A Detours | | Standard Detour Sign |
| | 4 Detours | | Standard Detour Sign |
| | 5 Detours | | Sign Design Details |
| | 5A Detours | | Sign Design Details |
| | | MT1 | Wide Flange Sign Post Installation |
| | | MT1A | Wide Flange Sign Post Installation |
| | | MT2 | Sign Details |
| | | MT3 | Sign Details |

## GENERAL NOTES

Plans for the existing structure are on file and are available on request in the Bridge Department of the Indiana Department of Transportation as:- File No. I-465-127-5275 and I-465-127-5275A

Reinforcing steel cover shall be 2 1/2" in top and 1" minimum in bottom of floor slabs, 3" in footings except bottom steel which shall be 4", and 2" in all other parts, unless noted.

Reinforcing steel in deck and railing to be epoxy coated.

Seal the following with a Portland Cement Concrete Sealer:
- the bridge deck surface
- the roadway face, top and coping face of the barrier rail and transitions
- the coping face and underside of the deck to the exterior beam
- all exposed surfaces of the reconstructed median barrier rail on I-465
- the bottom 2'-9 on each side of the widened center pier
- the exposed ends of the "hammer head" piers at Pier Nos. 2, 3 and 4

See Supplemental Specification 709.04C.

Masonry Coating (Color No. 27778) shall be applied as follows:
- the roadway face, top and coping face of the barrier rail and transitions
- the coping face and underside of the deck to the exterior beam
- all exposed surfaces of the reconstructed median barrier rail on I-465
- the bottom 2'-9 on each side of the widened center pier
- the exposed surfaces of the wingwalls

See Special Provisions.

STRUCTURE SECTION, GENERAL NOTES AND STANDARD DRAWING TABLE

# INDIANA DEPARTMENT OF TRANSPORTATION

MARION COUNTY

SCALE:- 3/8" = 1'-0 Unless Otherwise Noted

DATE:- December 7, 1994

Dennis R. Clark

DENNIS R. CLARK REGISTERED No. 17234 STATE OF INDIANA PROFESSIONAL ENGINEER

DRAWING:- D2 OF 17 SHEET:- 8 OF 67

PROJECT:- NH-465-4(284)125 STATION:-50+00.00

BRIDGE CONTRACT NO. B-21773

BRIDGE FILE:- I-465-127-5275~~B~~C

| | | | |
|---|---|---|---|
| DESIGNED | DPJ | C'K'D | DRC |
| DRAWN | PCR | C'K'D | DRC |
| TRACED | | C'K'D | |

1-25-95 Rev. Std. Dwg. Table (G.R.E.T.)

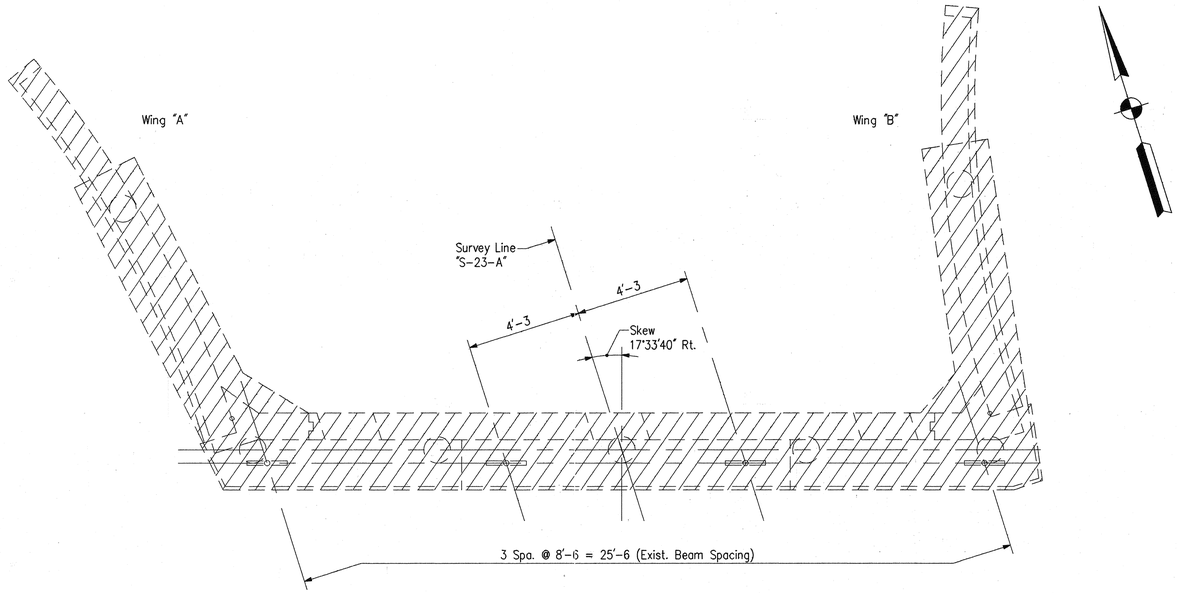


## PLAN

(Showing Bent No. 1, Bent No. 5 Same)

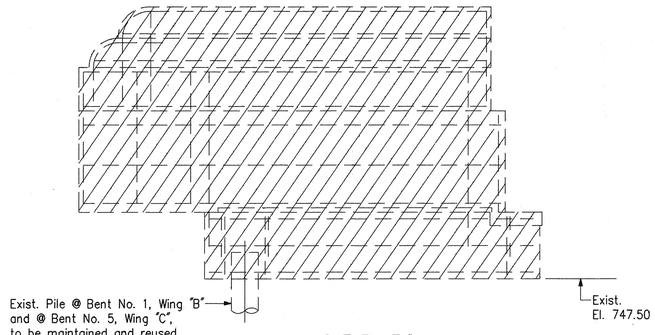


## WING ELEVATION

(Showing Wing "A", Wing "B" same by opposite hand)

NOTE:

All Existing Reinforcing to be removed.

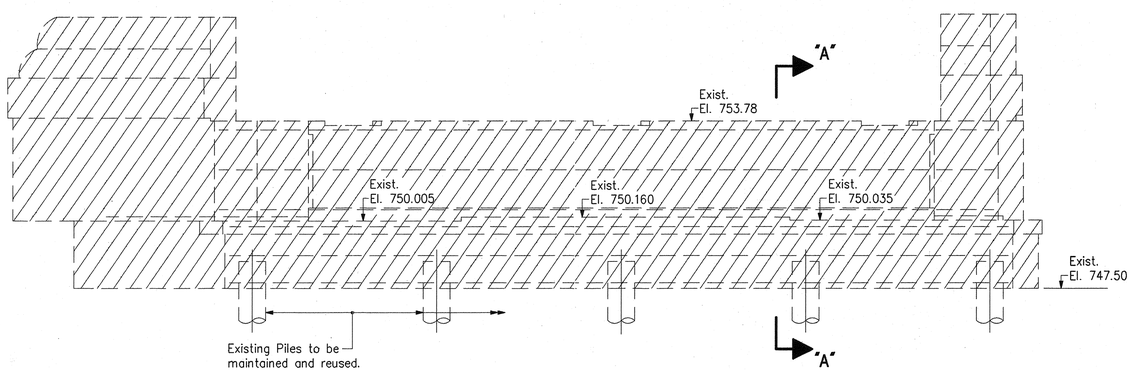


## ELEVATION

(Showing Bent No. 1, Bent No. 5 Same)

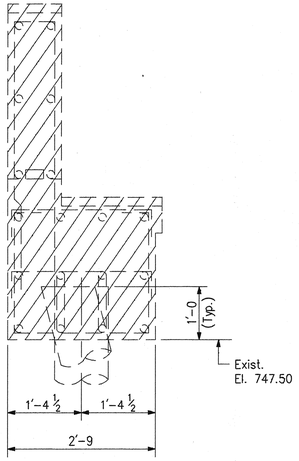


## SECTION "A-A"

Scale: 3/4" = 1'-0

## NOTES:

- For General Notes, see Dwg. D2.
- For Bent No. 1 and No. 5 Reconstruction Details, see Dwg. D4-D7.

Limits of Removal Areas

## BENT NO. 1 AND NO. 5 REMOVAL DETAILS

# INDIANA DEPARTMENT OF TRANSPORTATION

MARION COUNTY

SCALE:- 3/8" = 1'-0 Unless Otherwise Noted

DATE:- December 7, 1994

Dennis R. Clark

DENNIS R. CLARK REGISTERED No. 17234 STATE OF INDIANA PROFESSIONAL ENGINEER

DRAWING:- D3 OF 17 SHEET:- 9 OF 67

PROJECT:- NH/465-4(284)125 STATION:- x

BRIDGE CONTRACT NO. B-21773

BRIDGE FILE:- I-465-127-52759 C

| | | | |
|---|---|---|---|
| DESIGNED | DPJ | C'K'D | DRC |
| DRAWN | PCR | C'K'D | DRC |
| TRACED | | C'K'D | |

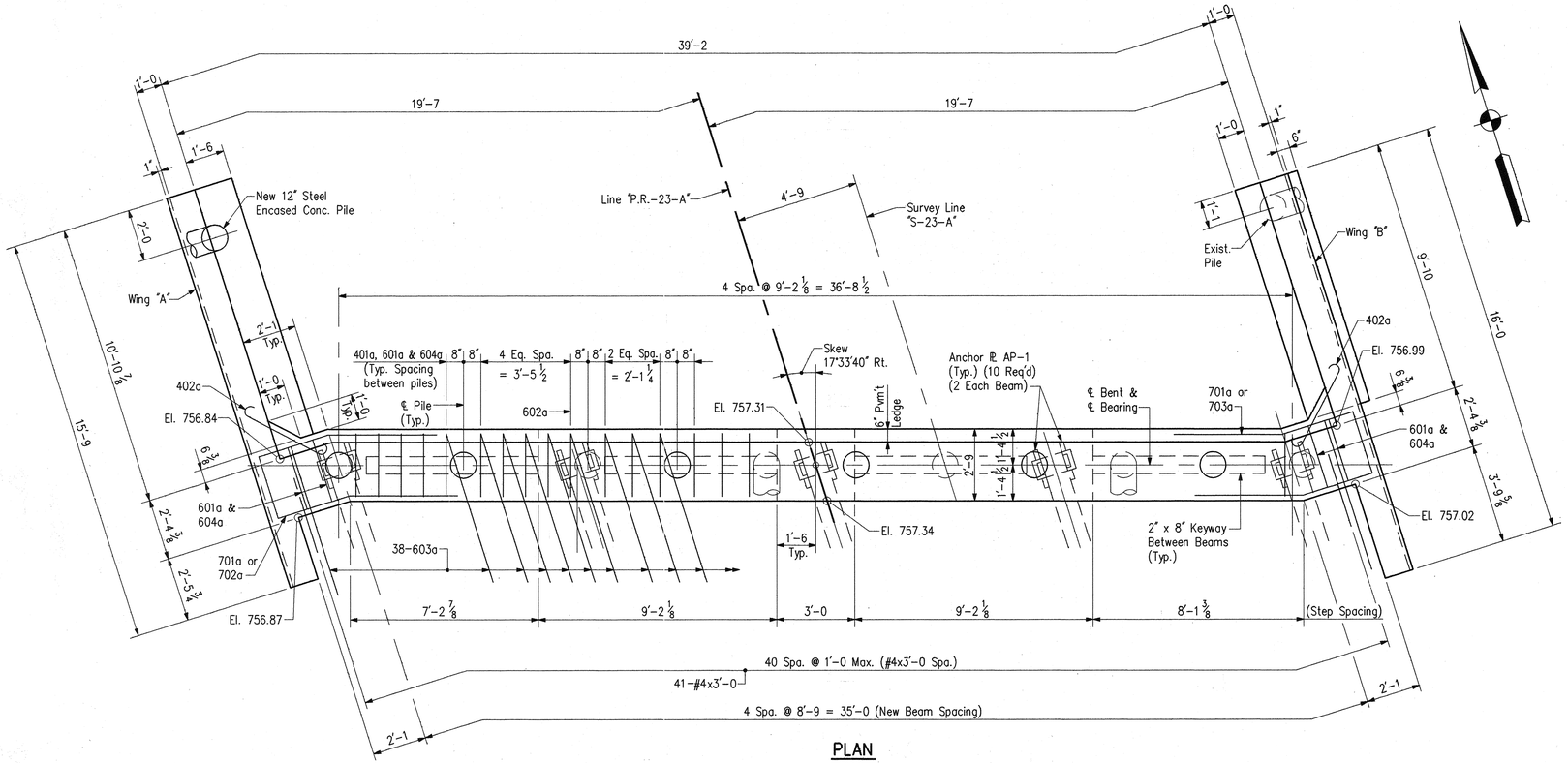


## PLAN

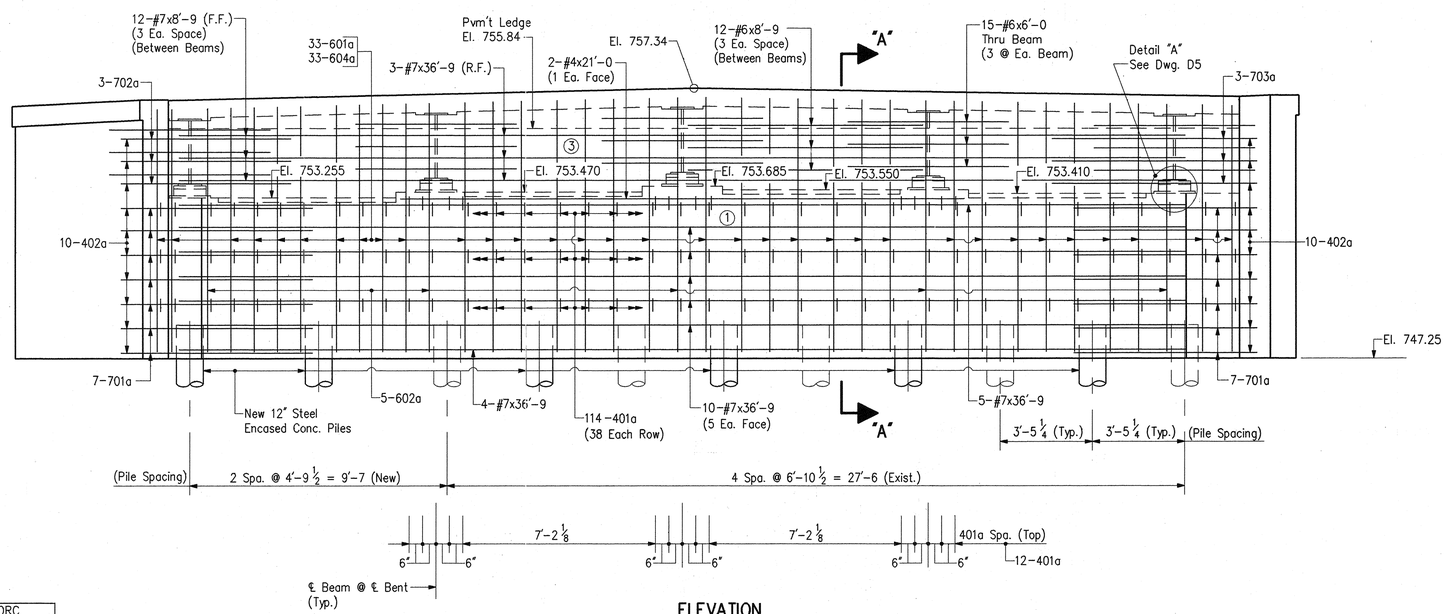


## ELEVATION

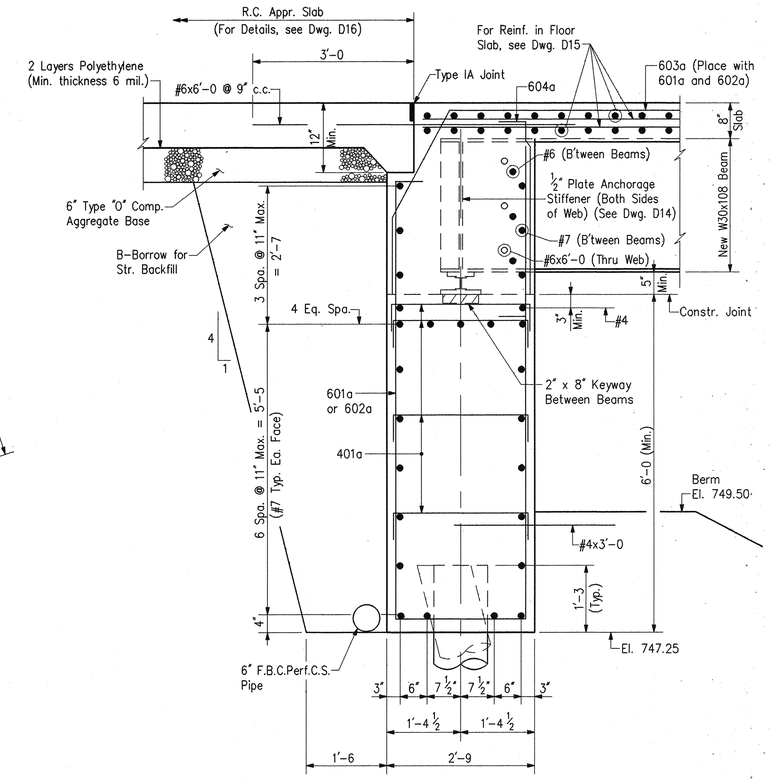


## SECTION "A-A"

Scale: 3/4" = 1'-0

## NOTES:

- For Reinforcing Bar Notes and Bar Bending details, see Bridge Std. C1.
- For wingwall details and Bar Bending Diagrams, see Dwg. D5.
- For Bill of Materials, see Dwg. D7.
- For bridge floor details, See Dwg. D15.
- For bearing details, see Dwg. D5.
- For General Notes, see Dwg. D2.
- For Pour Diagram, see Dwg. D15.
- (X) Indicates Pour Number

## BENT NO. 1 DETAILS

# INDIANA DEPARTMENT OF TRANSPORTATION

MARION COUNTY

SCALE:- 3/8" =1'-0 Unless Otherwise Noted

DATE:- December 7, 1994

Dennis L. Clark

DENNIS R. CLARK REGISTERED No. 17234 STATE OF INDIANA PROFESSIONAL ENGINEER

DRAWING:- D4 OF 17 SHEET:- 10 OF 67

PROJECT:- NH/465-4(284)125 STATION:- x

BRIDGE CONTRACT NO. B-21773

BRIDGE FILE:- I-465-127-5275 C

| | | | |
|---|---|---|---|
| DESIGNED | DPJ | C'K'D | DRC |
| DRAWN | PCR | C'K'D | DRC |
| TRACED | | C'K'D | |

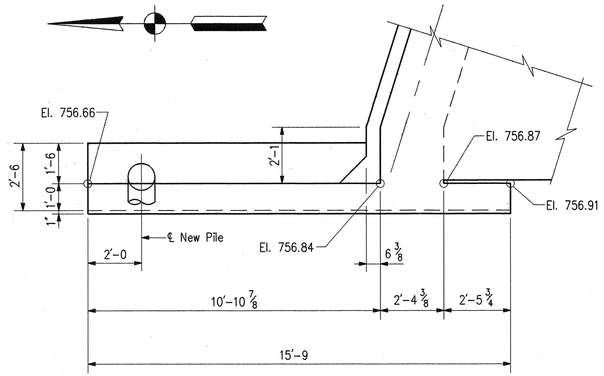


PLAN – WING "A"

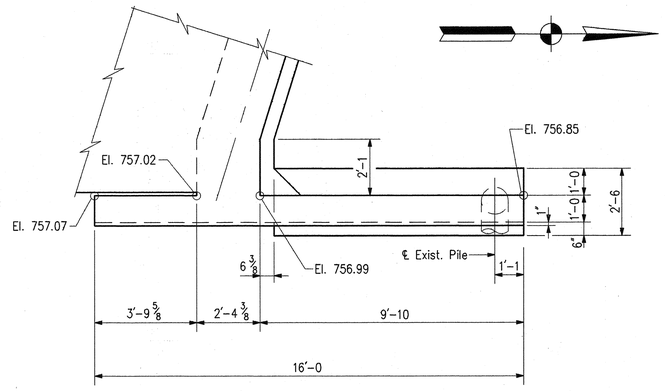


PLAN – WING "B"

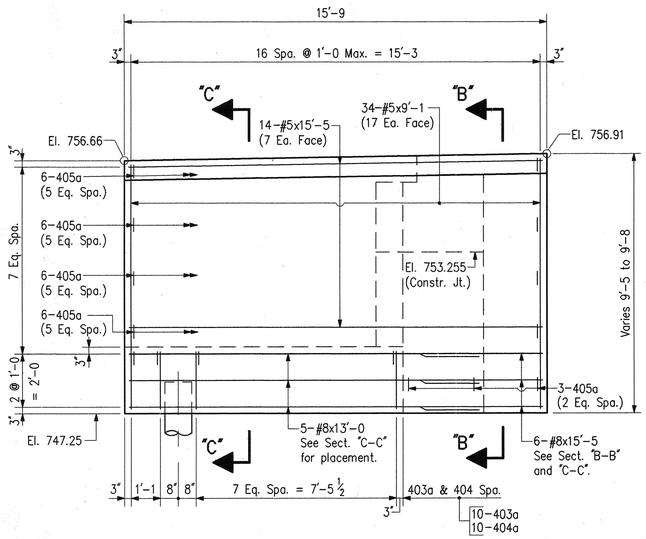


ELEVATION – WING "A"

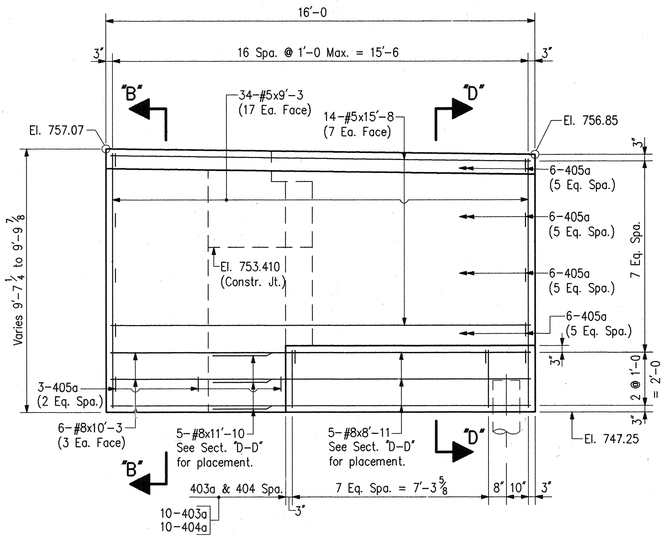


ELEVATION – WING "B"

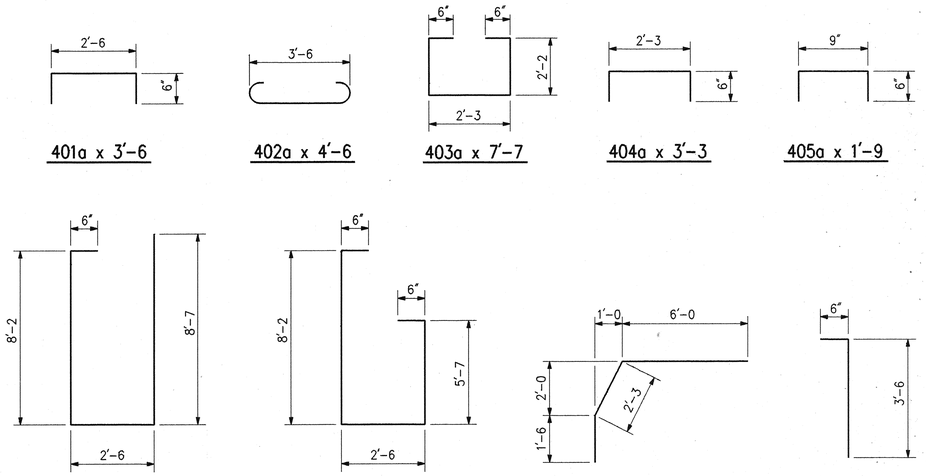


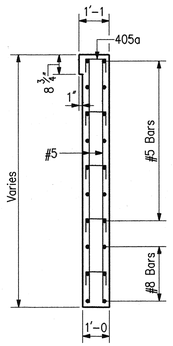


SECTION "B-B"

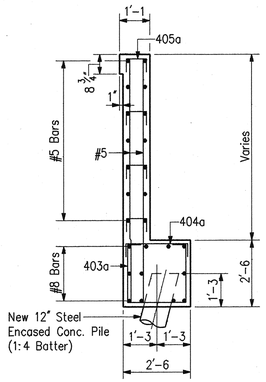


SECTION "C-C"

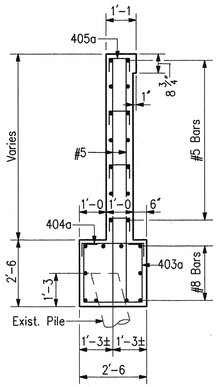


SECTION "D-D"

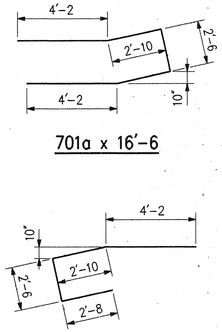


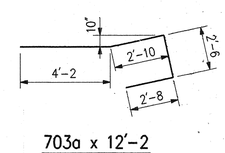


## NOTES:

- For Reinforcing Bar Notes and Bar Bending details, see Bridge Std. C1.
- For Bill of Materials, see Dwg. D7.
- For bridge floor details, See Dwg. D15.
- For General Notes, see Dwg. D2.

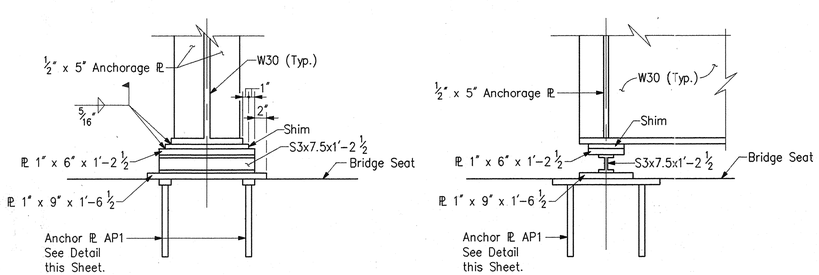


DETAIL "A"

Scale: 1" = 1'-0

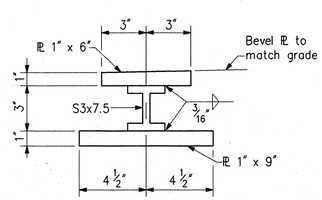


BEARING ASSEMBLY

No Scale

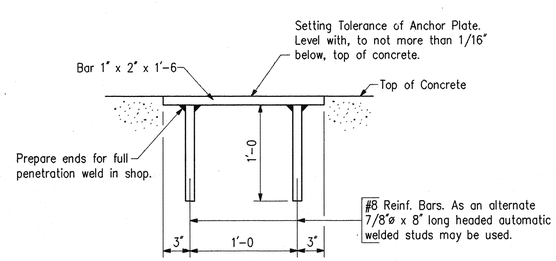


ANCHOR PLATE MK-AP1 DETAILS

No Scale

BENT NO. 1 DETAILS

# INDIANA DEPARTMENT OF TRANSPORTATION

MARION COUNTY

SCALE:- 3/8" = 1'-0 Unless Otherwise Noted

DATE:- December 7, 1994

Dennis R. Clark

DENNIS R. CLARK REGISTERED No. 17234 STATE OF INDIANA PROFESSIONAL ENGINEER

DRAWING:- D5 OF 17 SHEET:- 11 OF 67

PROJECT:- NH/465-4(284)125 STATION:- x

BRIDGE CONTRACT NO. B-21773

BRIDGE FILE:- I-465-127-5275 C

| | | | |
|---|---|---|---|
| DESIGNED | DPJ | C'K'D | DRC |
| DRAWN | PCR | C'K'D | DRC |
| TRACED | | C'K'D | |

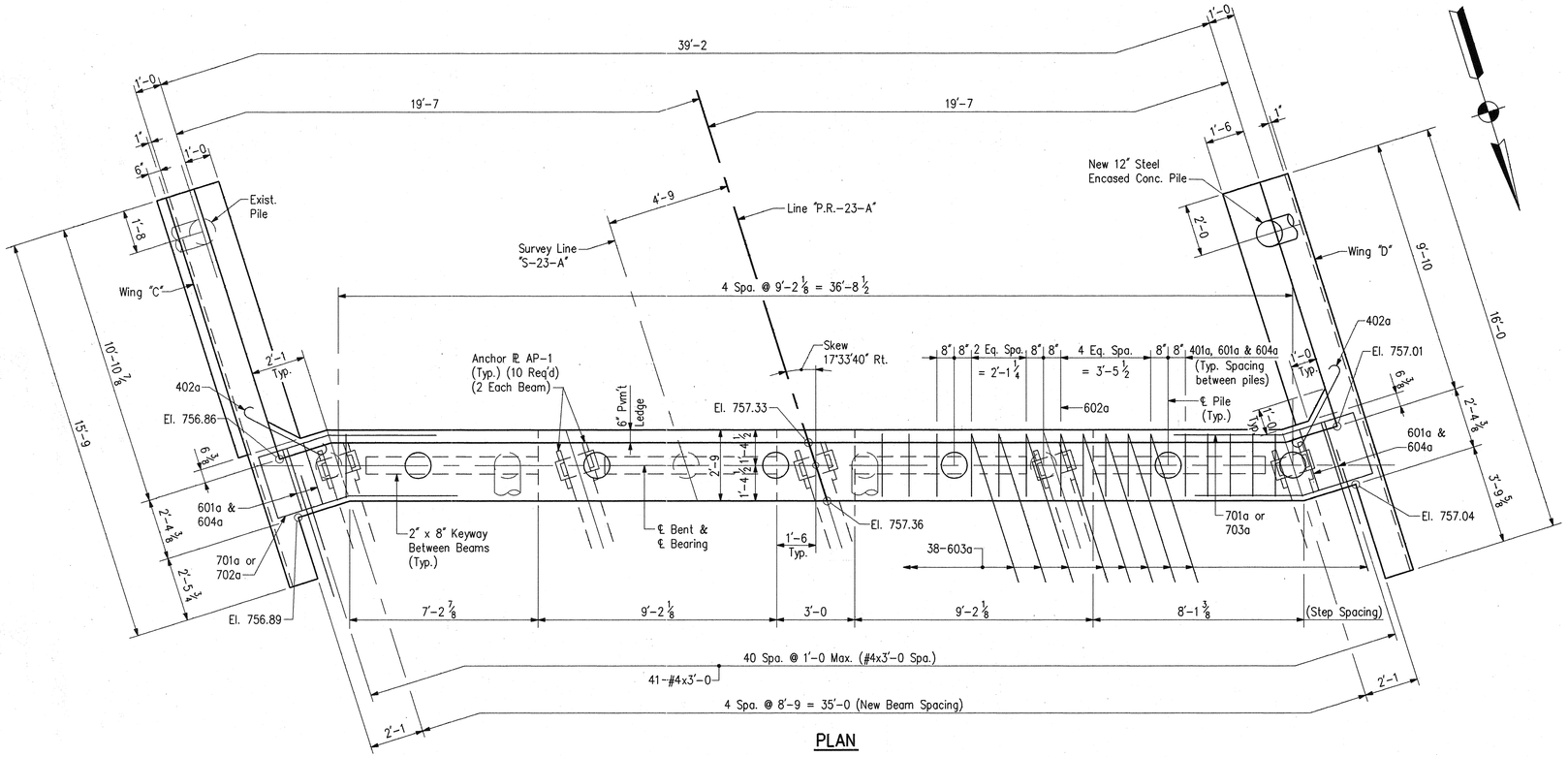


## PLAN

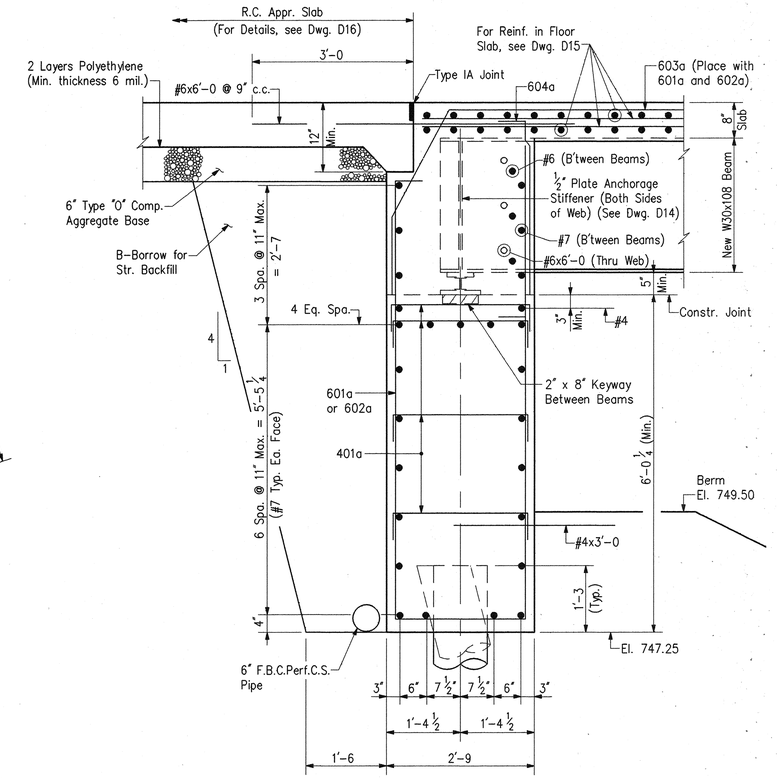


## SECTION "A-A"

Scale: 3/4" = 1'-0

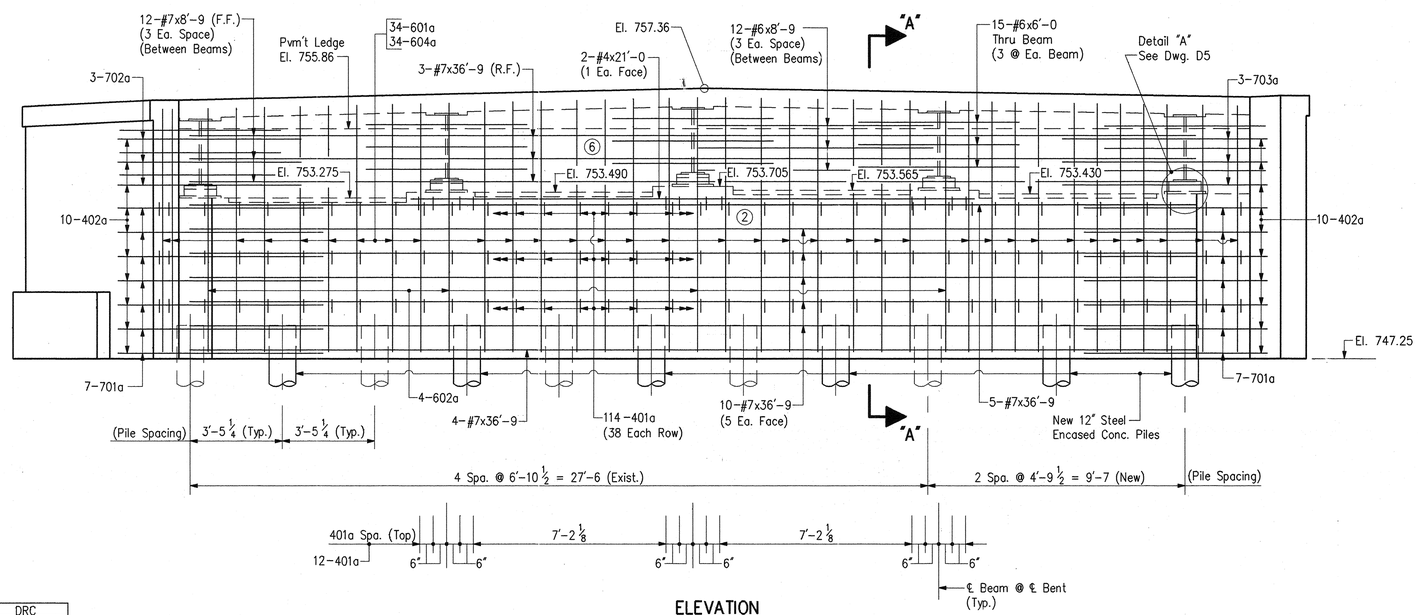


## ELEVATION

## NOTES:

- For Reinforcing Bar Notes and Bar Bending details, see Bridge Std. C1.
- For wingwall details, see Dwg. D7.
- For Bill of Materials, see Dwg. D7.
- For bridge floor details, See Dwg. D15.
- For bearing details and Bar Bending Diagrams, see Dwg. D5.
- For General Notes, see Dwg. D2.
- For Pour Diagram, see Dwg. D15.

(x) Indicates Pour Number

## BENT NO. 5 DETAILS

# INDIANA DEPARTMENT OF TRANSPORTATION

MARION COUNTY

SCALE:- 3/8" = 1'-0 Unless Otherwise Noted

DATE:- December 7, 1994

Dennis R. Clark

DENNIS R. CLARK REGISTERED No. 17234 STATE OF INDIANA PROFESSIONAL ENGINEER

DRAWING:- D6 OF 17 SHEET:- 12 OF 67

PROJECT:- NH/465-4(284)125 STATION:- x

BRIDGE CONTRACT NO. B-21773

BRIDGE FILE:- I-465-127-5275 C

| | | | |
|---|---|---|---|
| DESIGNED | DPJ | C'K'D | DRC |
| DRAWN | PCR | C'K'D | DRC |
| TRACED | | C'K'D | |

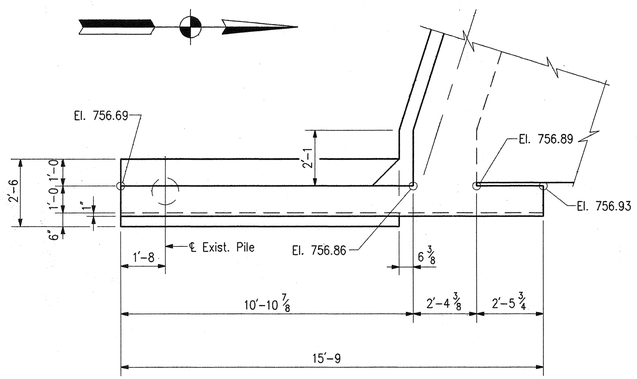


PLAN – WING "C"

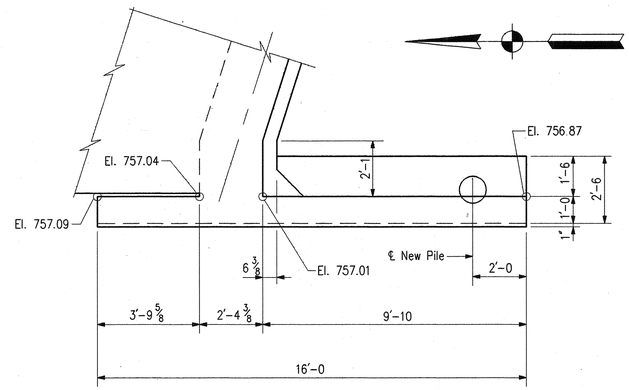


PLAN – WING "D"

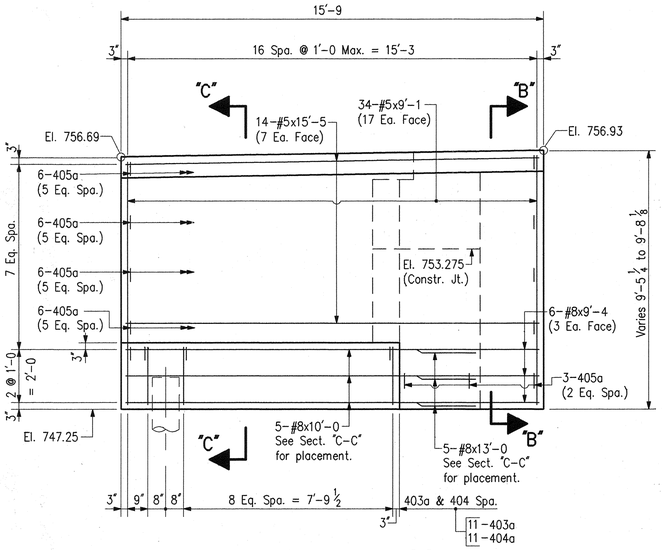


ELEVATION – WING "C"

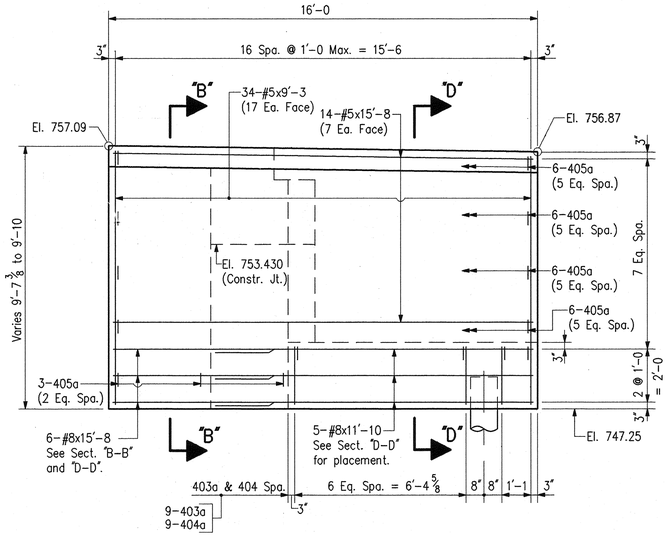


ELEVATION – WING "D"

## BENT NO. 1
## BILL OF MATERIALS

| REINFORCING STEEL | | | |
|---|---|---|---|
| SIZE & MARK | No. OF BARS | LENGTH | WEIGHT (LBS.) |
| EPOXY COATED REINFORCING | | | |
| #8 | 6 | 15'-5" | |
| #8 | 5 | 13'-0" | |
| #8 | 5 | 11'-10" | |
| #8 | 6 | 10'-3" | |
| #8 | 5 | 8'-11" | |
| TOTAL #8 BARS | | | 862 |
| 703a | 3 | 12'-2" | |
| 702a | 3 | 12'-2" | |
| 701a | 14 | 16'-6" | |
| #7 | 22 | 36'-9" | |
| #7 | 12 | 8'-9" | |
| TOTAL #7 BARS | | | 2489 |
| 604a | 33 | 4'-0" | |
| 603a | 38 | 9'-9" | |
| 602a | 5 | 17'-3" | |
| 601a | 33 | 19'-9" | |
| #6 | 12 | 8'-9" | |
| #6 | 15 | 6'-0" | |
| TOTAL #6 BARS | | | 2156 |
| #5 | 14 | 15'-8" | |
| #5 | 14 | 15'-5" | |
| #5 | 34 | 9'-3" | |
| #5 | 34 | 9'-1" | |
| TOTAL #5 BARS | | | 1104 |
| 405a | 54 | 1'-9" | |
| 404a | 20 | 3'-3" | |
| 403a | 20 | 7'-7" | |
| 402a | 20 | 4'-6" | |
| 401a | 126 | 3'-6" | |
| #4 | 2 | 21'-0" | |
| #4 | 41 | 3'-0" | |
| TOTAL #4 BARS | | | 673 |
| TOTAL EPOXY REINF. | | | 7284 |

| MISCELLANEOUS | |
|---|---|
| Anchor Plate AP1 | 10 Ea. |
| B-Borrow for Structure Backfill | 33 Cys |
| 6" F.B.C.Perf.C.S. Pipe | 55 Lft. |
| 7-12"ø x 0.184" Steel Encased Concrete Piles x 35' | 245 Lft. |

## BENT NO. 5
## BILL OF MATERIALS

| REINFORCING STEEL | | | |
|---|---|---|---|
| SIZE & MARK | No. OF BARS | LENGTH | WEIGHT (LBS.) |
| EPOXY COATED REINFORCING | | | |
| #8 | 6 | 15'-8" | |
| #8 | 5 | 13'-0" | |
| #8 | 5 | 11'-10" | |
| #8 | 5 | 10'-0" | |
| #8 | 6 | 9'-4" | |
| TOTAL #8 BARS | | | 866 |
| 703a | 3 | 12'-2" | |
| 702a | 3 | 12'-2" | |
| 701a | 14 | 16'-6" | |
| #7 | 22 | 36'-9" | |
| #7 | 12 | 8'-9" | |
| TOTAL #7 BARS | | | 2489 |
| 604a | 34 | 4'-0" | |
| 603a | 38 | 9'-9" | |
| 602a | 4 | 17'-3" | |
| 601a | 34 | 19'-9" | |
| #6 | 12 | 8'-9" | |
| #6 | 15 | 6'-0" | |
| TOTAL #6 BARS | | | 2166 |
| #5 | 14 | 15'-8" | |
| #5 | 14 | 15'-5" | |
| #5 | 34 | 9'-3" | |
| #5 | 34 | 9'-1" | |
| TOTAL #5 BARS | | | 1104 |
| 405a | 54 | 1'-9" | |
| 404a | 20 | 3'-3" | |
| 403a | 20 | 7'-7" | |
| 402a | 20 | 4'-6" | |
| 401a | 126 | 3'-6" | |
| #4 | 2 | 21'-0" | |
| #4 | 41 | 3'-0" | |
| TOTAL #4 BARS | | | 673 |
| TOTAL EPOXY REINF. | | | 7298 |

| MISCELLANEOUS | |
|---|---|
| Anchor Plate AP1 | 10 Ea. |
| B-Borrow for Structure Backfill | 33 Cys |
| 6" F.B.C.Perf.C.S. Pipe | 58 Lft. |
| 7-12"ø x 0.184" Steel Encased Concrete Piles x 35' | 245 Lft. |

## FLOOR SLAB
## BILL OF MATERIALS

| REINFORCING STEEL | | | |
|---|---|---|---|
| SIZE & MARK | No. OF BARS | LENGTH | WEIGHT (LBS.) |
| EPOXY COATED REINFORCING | | | |
| #6 | 39 | 35'-8" | |
| #6 | 78 | 32'-2" | |
| #6 | 104 | 6'-0" | |
| TOTAL #6 BARS | | | 6795. |
| #5 | 4 | 40'-0" | |
| #5 | 834 | 38'-7" | |
| #5 | 44 | 38'-6" | |
| TOTAL #5 BARS | | | 35496 |
| 401a | 440 | 2'-5" | |
| #4 | 636 | 38'-0" | |
| TOTAL #4 BARS | | | 16855 |
| TOTAL EPOXY REINF. | | | 59146 |

| CONCRETE | | |
|---|---|---|
| CLASS "C" IN SUPERSTRUCTURE | | |
| Pour No. 1 | 26.2 Cys. | |
| Wing "A" | 7.0 Cys. | |
| Wing "B" | 7.1 Cys. | |
| Pour No. 2 | 26.2 Cys. | |
| Wing "C" | 7.1 Cys. | |
| Wing "D" | 7.1 Cys. | |
| Pour No. 3 | 28.3 Cys. | |
| Pour No. 4 | 66.1 Cys. | |
| Pour No. 5 | 73.0 Cys. | |
| Pour No. 6 | 69.0 Cys. | |
| TOTAL CLASS "C" IN SUPERSTRUCTURE | | 317.1 Cys. |

| MISCELLANEOUS | |
|---|---|
| Surface Seal | 8943 Sft. |
| Masonry Coating | 1683 Sft. |

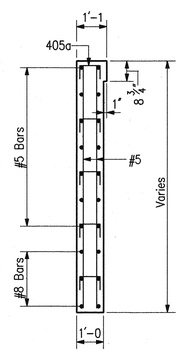


SECTION "B-B"

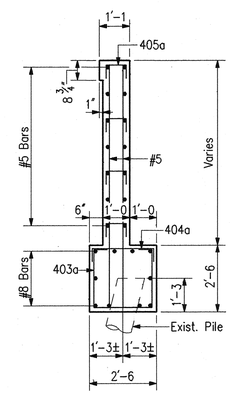


SECTION "C-C"

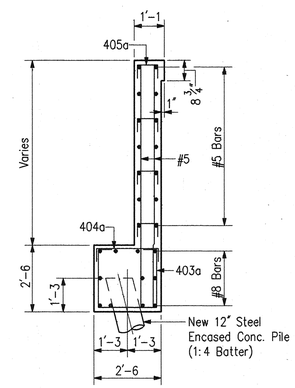


SECTION "D-D"

NOTES:

- For Reinforcing Bar Notes and Bar Bending details, see Bridge Std. C1.
- For Bar Bending Diagrams, see Dwg. D5.
- For bridge floor details, See Dwg. D15.
- For General Notes, see Dwg. D2.

BENT NO. 5 DETAILS AND BILL OF MATERIALS

INDIANA DEPARTMENT OF TRANSPORTATION

MARION COUNTY

SCALE:- 3/8" = 1'-0 DATE:- December 7, 1994

Dennis R. Clark

DRAWING:- D7 OF 17 SHEET:- 13 OF 67

PROJECT:- NH/465-4(284)125 STATION:- x

BRIDGE CONTRACT NO. B-21773

BRIDGE FILE:- I-465-127-5275

DENNIS R. CLARK REGISTERED No. 17234 STATE OF INDIANA PROFESSIONAL ENGINEER

| | | | |
|---|---|---|---|
| DESIGNED | DPJ | C'K'D | DRC |
| DRAWN | PCR | C'K'D | DRC |
| TRACED | | C'K'D | |

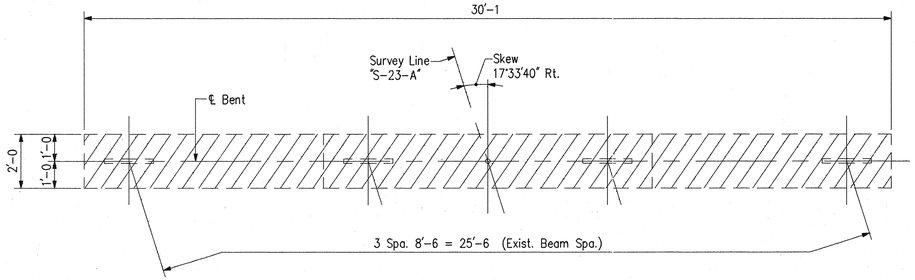


PLAN – BENT NO. 2 AND NO. 4

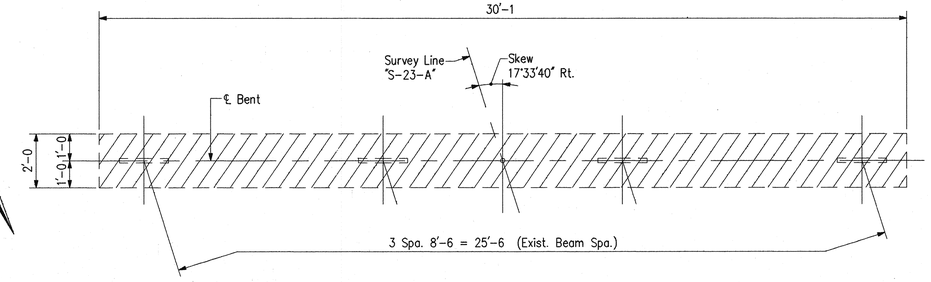


PLAN – BENT NO. 3

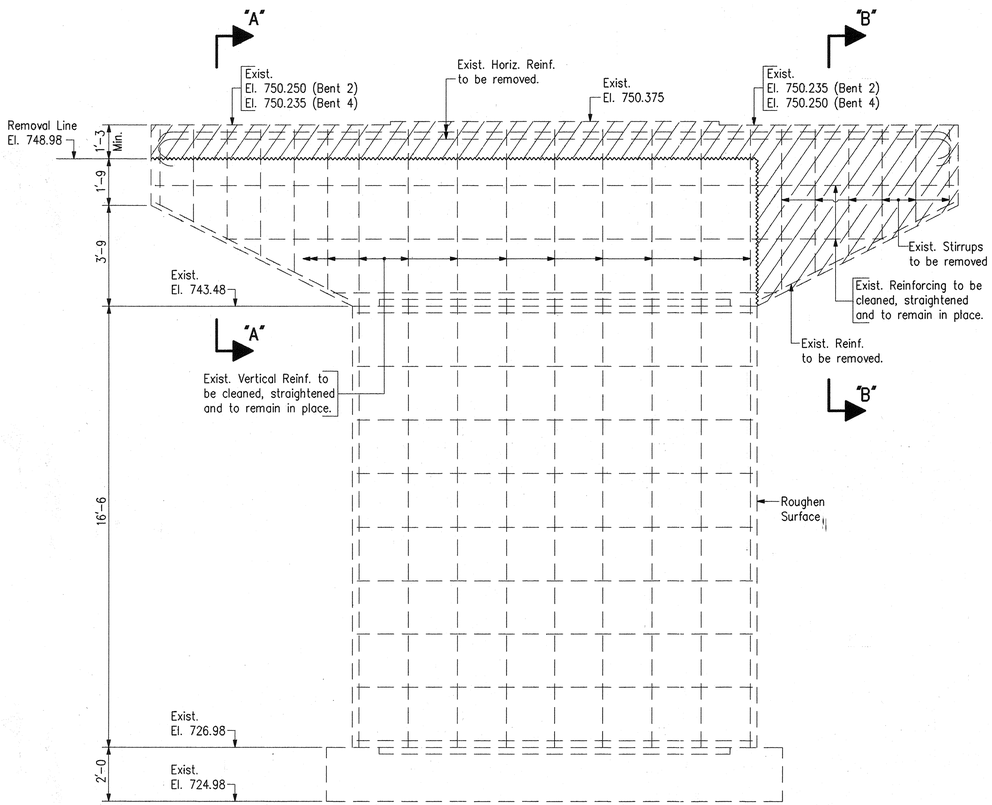


ELEVATION – BENT NO. 2 AND NO. 4

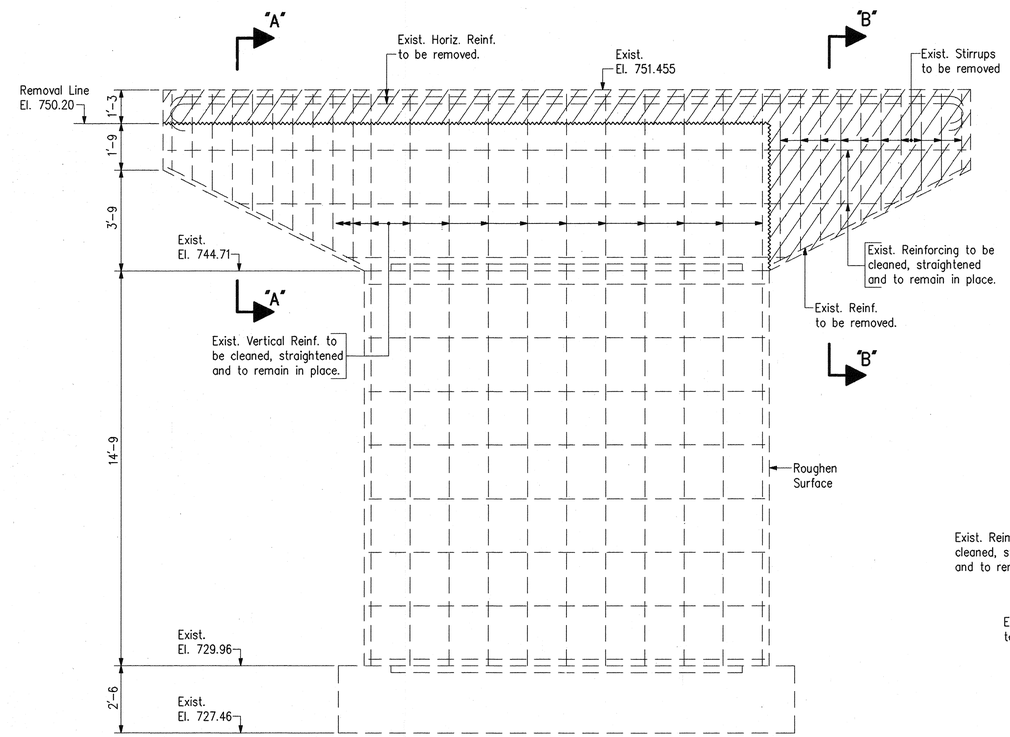


ELEVATION – BENT NO. 3

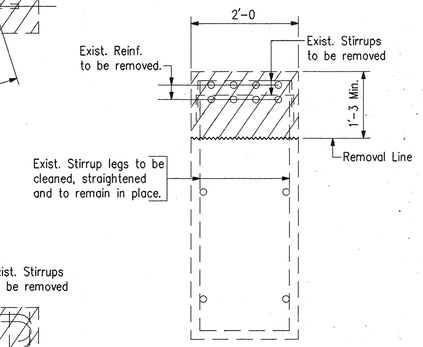


SECTION "A-A"

Scale: 3/4" = 1'-0

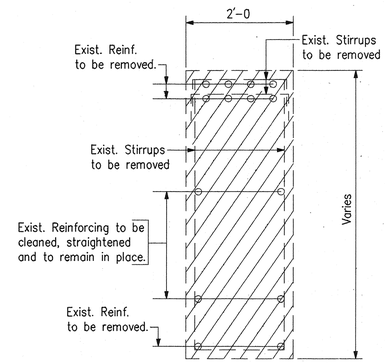


SECTION "B-B"

Scale: 3/4" = 1'-0

## NOTES:

- For Reconstruction Details, see Dwg. D9-D11.
- For General Notes, see Dwg. D2.
- Indicates Limits of Concrete Removal

BENT NO. 2, 3 AND 4 REMOVAL DETAILS

INDIANA DEPARTMENT OF TRANSPORTATION

MARION COUNTY

SCALE:- 3/8" = 1'-0 Unless Otherwise Noted

DATE:- December 7, 1994

Dennis R. Clark

DENNIS R. CLARK REGISTERED No. 17234 STATE OF INDIANA PROFESSIONAL ENGINEER

DRAWING:- D8 OF 17 SHEET:- 14 OF 67

PROJECT:- NH/465-4(284)125 STATION:- x

BRIDGE CONTRACT NO. B-21773

BRIDGE FILE:- I-465-127-5275 C

| | | | |
|---|---|---|---|
| DESIGNED | DPJ | C'K'D | DRC |
| DRAWN | PCR | C'K'D | DRC |
| TRACED | | C'K'D | |

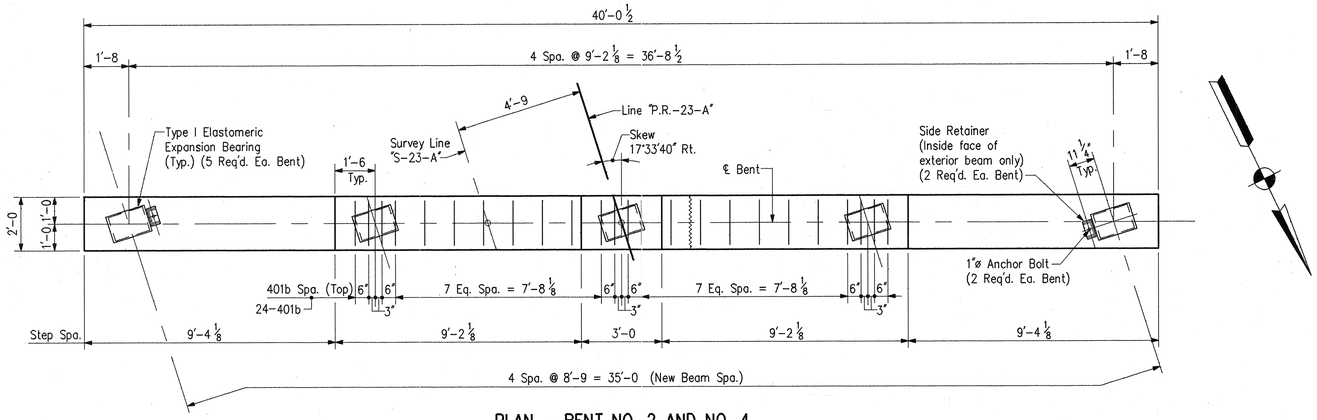


## PLAN – BENT NO. 2 AND NO. 4

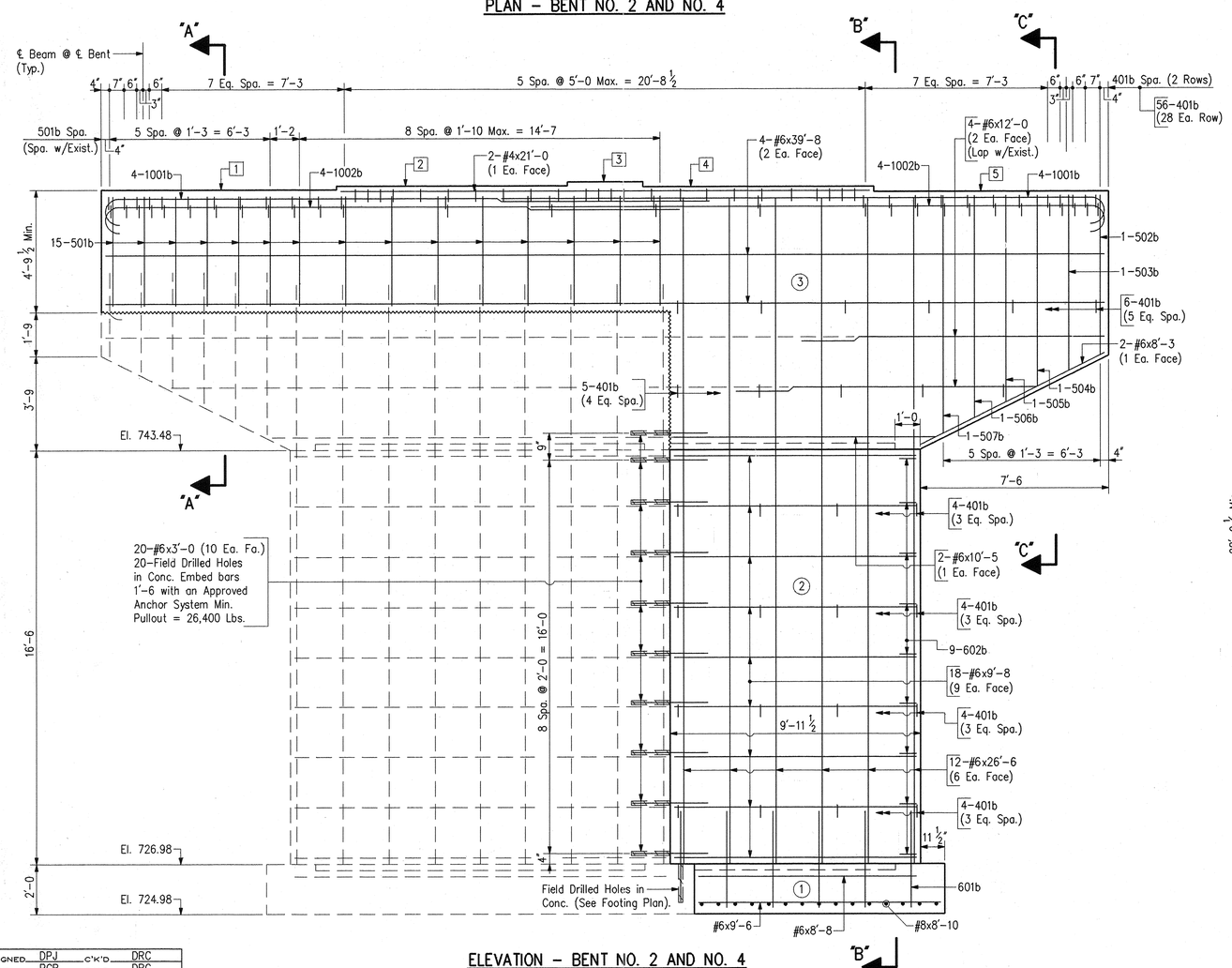


## ELEVATION – BENT NO. 2 AND NO. 4

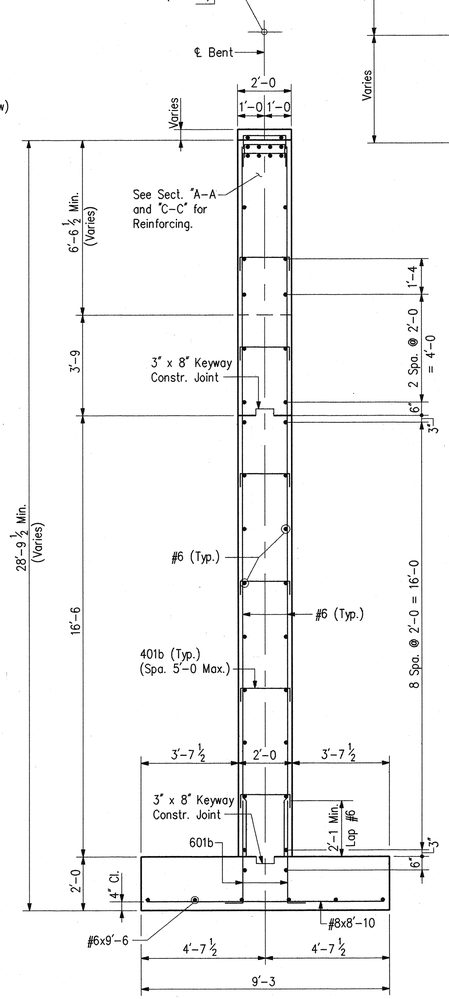


## SECTION "B-B"

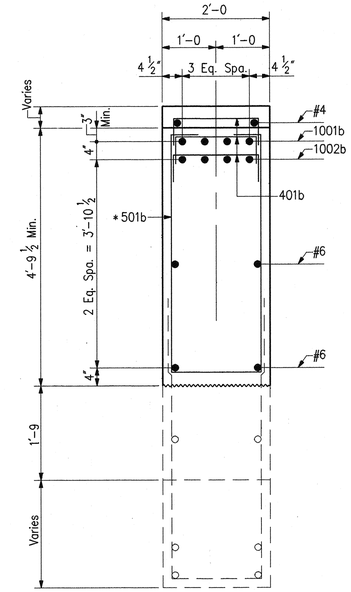


* New Reinf. to be placed with Exist. Stirrup

## SECTION "A-A"

Scale: 3/4" = 1'-0

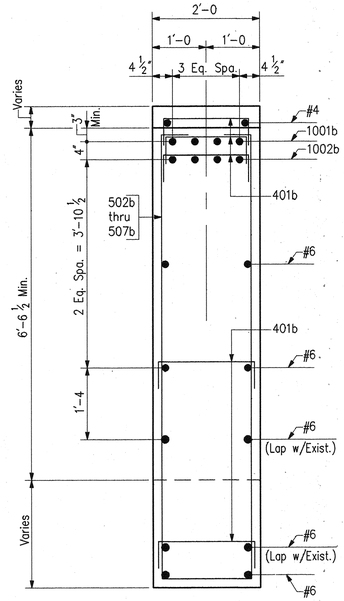


## SECTION "C-C"

Scale: 3/4" = 1'-0

## BRIDGE SEAT ELEVATIONS

1. El. 753.865 (Bent 2)
   El. 753.780 (Bent 4)
2. El. 754.015 (Bent 2)
   El. 753.980 (Bent 4)
3. El. 754.170 (Bent 2)
   El. 754.180 (Bent 4)
4. El. 753.970 (Bent 2)
   El. 754.030 (Bent 4)
5. El. 753.765 (Bent 2)
   El. 753.875 (Bent 4)

## NOTES:

- For Reinforcing Bar Notes and Bar Bending Details, see Bridge Std. C1.
- For Bar Bending Diagrams and Bill of Materials, see Dwg. D11
- For Footing Plan and Substructure Excavation Detail, see Dwg. D11
- For Elastomeric Bearing Details, see Dwg. D13.
- For General Notes, see Dwg. D2.
- (x) Indicates Pour Number
- Minimum Lap for #6 Bar = 2'-1.

## BENT NO. 2 AND NO. 4 DETAILS

# INDIANA DEPARTMENT OF TRANSPORTATION

MARION COUNTY

SCALE:- 3/8" = 1'-0 Unless Otherwise Noted

DATE:- December 7, 1994

DRAWING:- D9 OF 17 SHEET:- 15 OF 67

PROJECT:- NH/465-4(284)125 STATION:- x

BRIDGE CONTRACT NO. B-21773

BRIDGE FILE:- I-465-127-52759 C

DENNIS R. CLARK REGISTERED No. 17234 STATE OF INDIANA PROFESSIONAL ENGINEER

| | | | |
|---|---|---|---|
| DESIGNED | DPJ | C'K'D | DRC |
| DRAWN | PCR | C'K'D | DRC |
| TRACED | | C'K'D | |

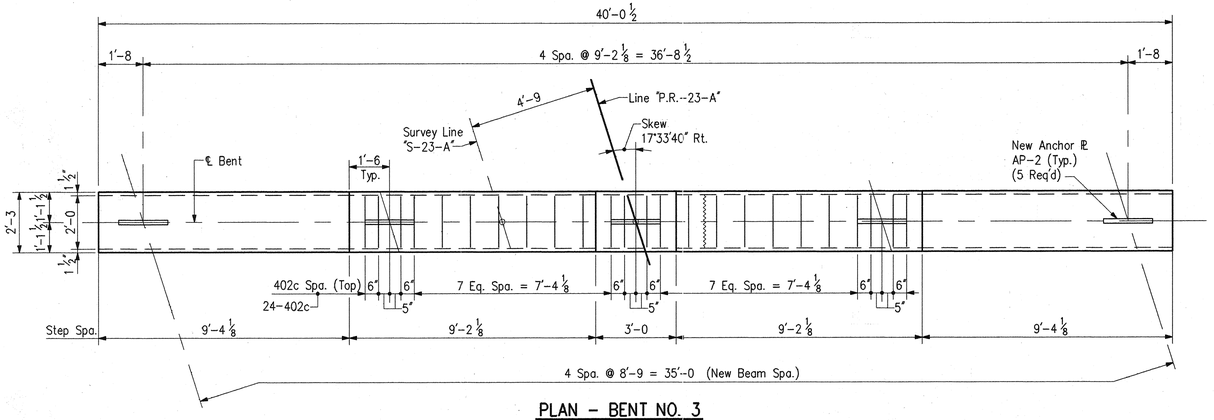


PLAN - BENT NO. 3

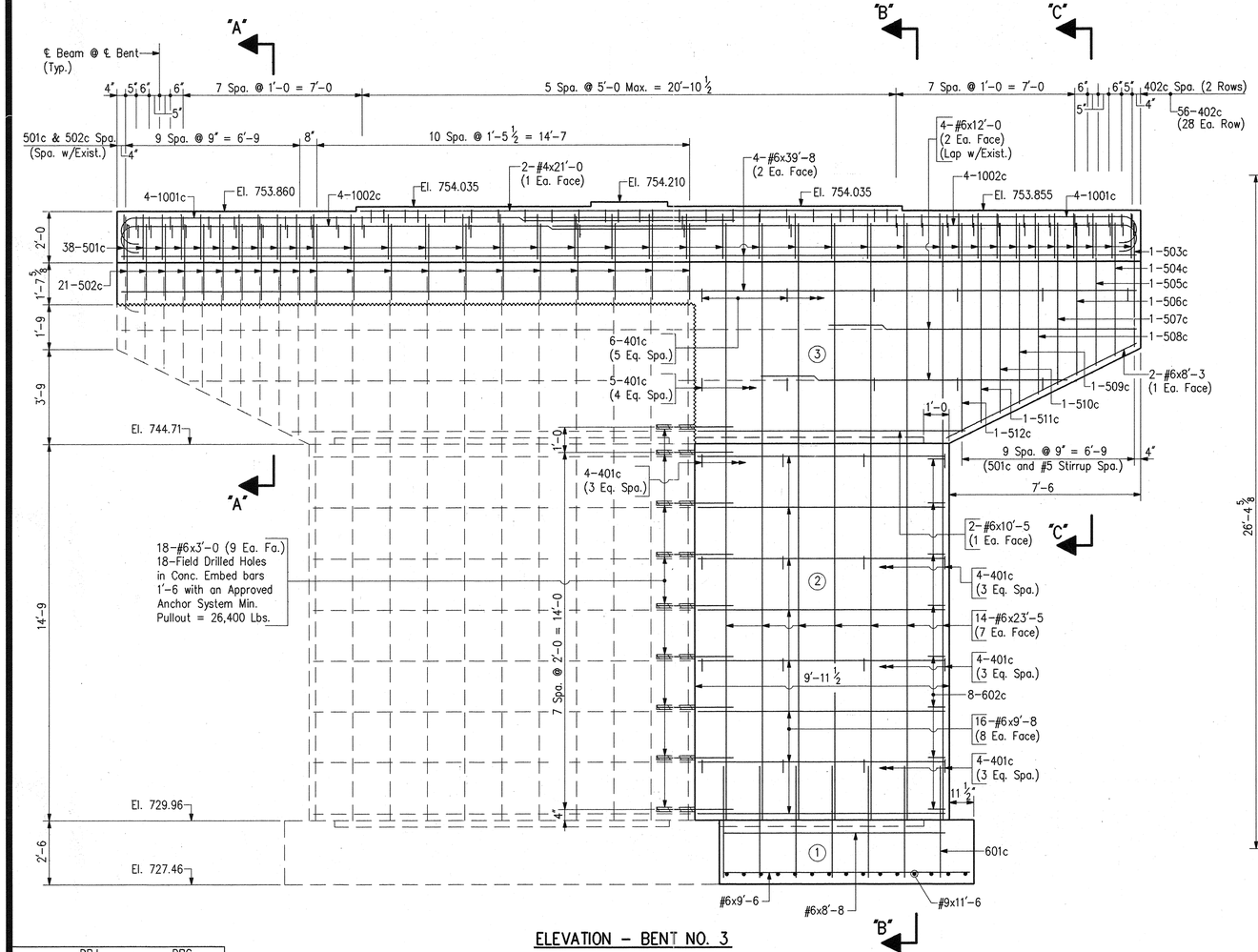


ELEVATION - BENT NO. 3

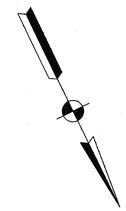

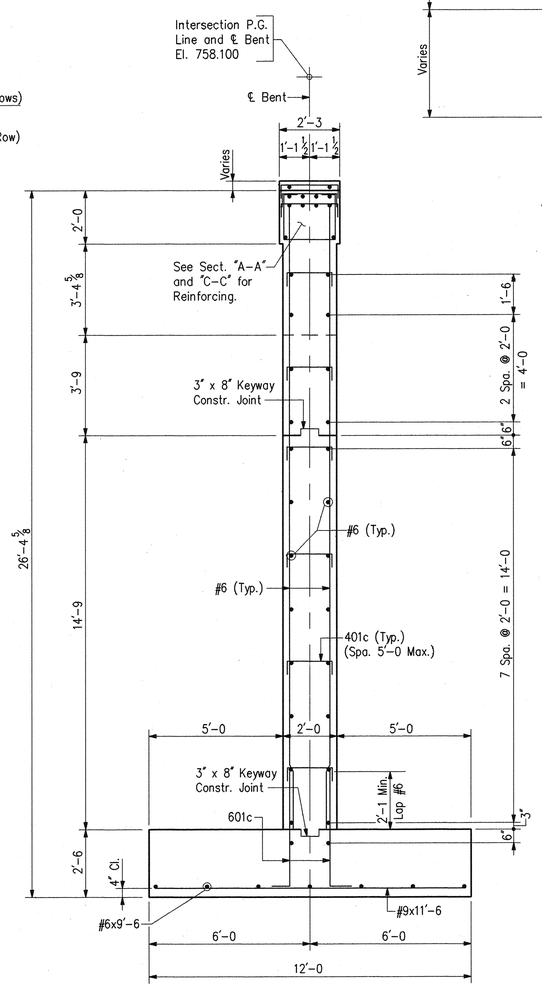


SECTION "B-B"

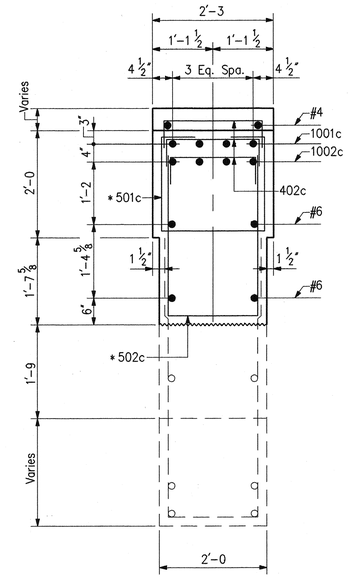


SECTION "A-A"

Scale: 3/4" = 1'-0

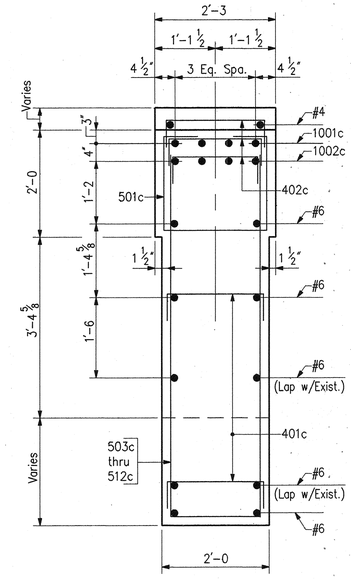


SECTION "C-C"

Scale: 3/4" = 1'-0

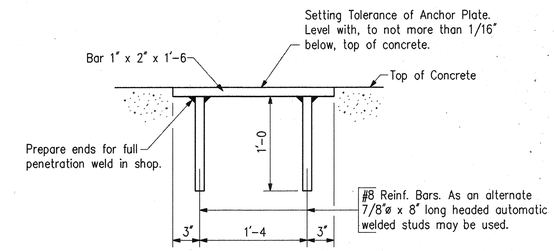


ANCHOR PLATE MK-AP2 DETAILS

No Scale

* New Reinf. to be placed with Exist. Stirrup

## NOTES:

- For Reinforcing Bar Notes and Bar Bending Details, see Bridge Std. C1.
- For Bar Bending Diagrams and Bill of Materials, see Dwg. D11.
- For Footing Plan and Substructure Excavation Detail, see Dwg. D11.
- For Fixed Bearing Details, see Dwg. D13.
- For General Notes, see Dwg. D2.
- (x) Indicates Pour Number
- Minimum Lap for #6 Bar = 2'-1.

BENT NO. 3 DETAILS

# INDIANA DEPARTMENT OF TRANSPORTATION

MARION COUNTY

SCALE:- 3/8" = 1'-0 Unless Otherwise Noted

DATE:- December 7, 1994

Dennis R. Clark

DENNIS R. CLARK REGISTERED No. 17234 STATE OF INDIANA PROFESSIONAL ENGINEER

DRAWING:- D10 OF 17 SHEET:- 16 OF 67

PROJECT:- NH/465-4(284)125 STATION:- x

BRIDGE CONTRACT NO. B-21773

BRIDGE FILE:- I-465-127-5275 C

| | | | |
|---|---|---|---|
| DESIGNED | DPJ | C'K'D | DRC |
| DRAWN | PCR | C'K'D | DRC |
| TRACED | | C'K'D | |

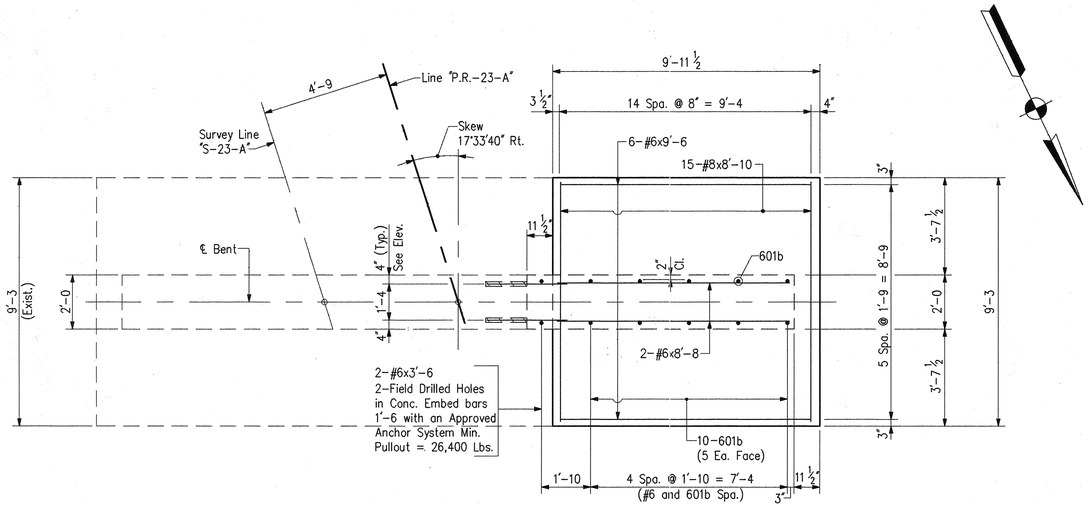


FOOTING PLAN – BENT NO. 2 AND NO. 4

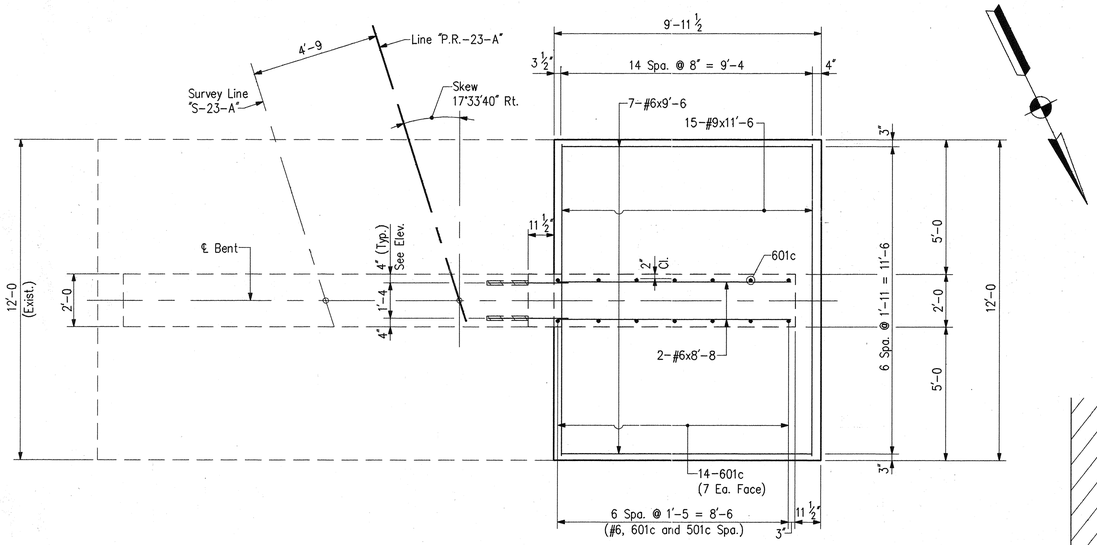


FOOTING PLAN – BENT NO. 3

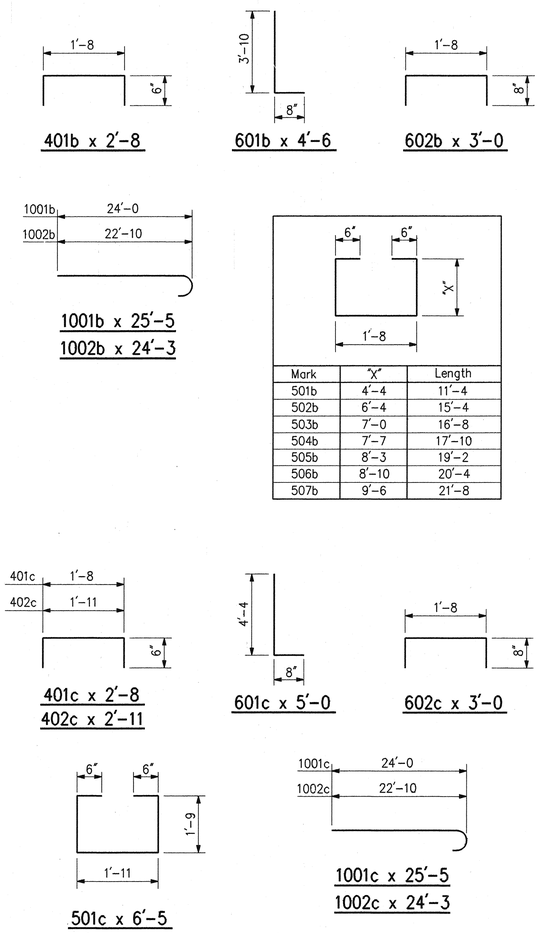





| Mark | "X" | Length |
|---|---|---|
| 501b | 4'-4 | 11'-4 |
| 502b | 6'-4 | 15'-4 |
| 503b | 7'-0 | 16'-8 |
| 504b | 7'-7 | 17'-10 |
| 505b | 8'-3 | 19'-2 |
| 506b | 8'-10 | 20'-4 |
| 507b | 9'-6 | 21'-8 |

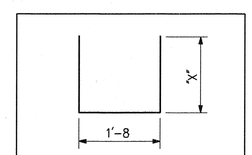


| Mark | "X" | Length |
|---|---|---|
| 502c | 3'-0 | 7'-8 |
| 503c | 4'-10 | 11'-4 |
| 504c | 5'-3 | 12'-2 |
| 505c | 5'-7 | 12'-10 |
| 506c | 6'-0 | 13'-8 |
| 507c | 6'-4 | 14'-4 |
| 508c | 6'-9 | 15'-2 |
| 509c | 7'-1 | 15'-10 |
| 510c | 7'-6 | 16'-8 |
| 511c | 7'-10 | 17'-4 |
| 512c | 8'-3 | 18'-2 |

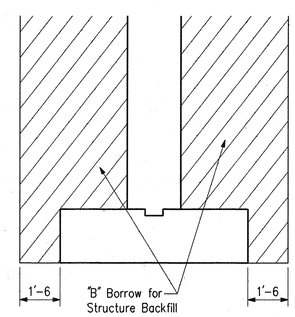


SUBSTRUCTURE EXCAVATION DETAIL

No Scale

## * BENT NO. 2 AND NO. 4 BILL OF MATERIALS

| REINFORCING STEEL | | | |
|---|---|---|---|
| SIZE & MARK | No. OF BARS | LENGTH | WEIGHT (LBS.) |
| PLAIN REINFORCING | | | |
| 1002b | 8 | 24'-3" | |
| 1001b | 8 | 25'-5" | |
| TOTAL #10 BARS | | | 1710 |
| | | | |
| #8 | 15 | 8'-10" | |
| TOTAL #8 BARS | | | 354 |
| | | | |
| 602b | 9 | 3'-0" | |
| 601b | 10 | 4'-6" | |
| #6 | 4 | 39'-8" | |
| #6 | 12 | 26'-6" | |
| #6 | 4 | 12'-0" | |
| #6 | 2 | 10'-5" | |
| #6 | 18 | 9'-8" | |
| #6 | 6 | 9'-6" | |
| #6 | 2 | 8'-8" | |
| #6 | 2 | 8'-3" | |
| #6 | 2 | 3'-6" | |
| #6 | 20 | 3'-0" | |
| TOTAL #6 BARS | | | 1426 |
| | | | |
| 507b | 1 | 21'-8" | |
| 506b | 1 | 20'-4" | |
| 505b | 1 | 19'-2" | |
| 504b | 1 | 17'-10" | |
| 503b | 1 | 16'-8" | |
| 502b | 1 | 15'-4" | |
| 501b | 15 | 11'-4" | |
| TOTAL #5 BARS | | | 293 |
| | | | |
| 401b | 107 | 2'-8" | |
| #4 | 2 | 21'-0" | |
| TOTAL #4 BARS | | | 219 |
| | | | |
| TOTAL PLAIN REINF. | | | 4002 |
| | | | |
| CONCRETE | | | |
| CLASS "B" IN FOOTINGS | | | |
| Pour No. 1 | | 6.8 Cys. | |
| TOTAL CLASS "B" IN FOOTINGS | | | 6.8 Cys. |
| CLASS "A" IN SUBSTRUCTURE | | | |
| Pour No. 2 | | 12.2 Cys. | |
| Pour No. 3 | | 20.8 Cys. | |
| TOTAL CLASS "A" IN SUBSTRUCTURE | | | 33.0 Cys. |
| | | | |
| MISCELLANEOUS | | | |
| Surface Seal | | | 6 Sft. |
| Foundation Excavation (Unclassified) | | | 79 Cys. |
| "B" Borrow for Structure Backfill | | | 60 Cys. |
| Elastomeric Expansion Bearing Type I | | | 5 Each |
| Field Drilled Holes in Concrete | | | 22 Each |

* Quantities for One Bent Only, Two Req'd

## BENT NO. 3 BILL OF MATERIALS

| REINFORCING STEEL | | | |
|---|---|---|---|
| SIZE & MARK | No. OF BARS | LENGTH | WEIGHT (LBS.) |
| PLAIN REINFORCING | | | |
| 1002c | 8 | 24'-3" | |
| 1001c | 8 | 25'-5" | |
| TOTAL #10 BARS | | | 1710 |
| | | | |
| #9 | 15 | 11'-6" | |
| TOTAL #9 BARS | | | 587 |
| | | | |
| 602c | 8 | 3'-0" | |
| 601c | 14 | 5'-0" | |
| #6 | 4 | 39'-8" | |
| #6 | 14 | 23'-5" | |
| #6 | 4 | 12'-0" | |
| #6 | 2 | 10'-5" | |
| #6 | 16 | 9'-8" | |
| #6 | 7 | 9'-6" | |
| #6 | 2 | 8'-8" | |
| #6 | 2 | 8'-3" | |
| #6 | 18 | 3'-0" | |
| TOTAL #6 BARS | | | 1439 |
| | | | |
| 512c | 1 | 18'-2" | |
| 511c | 1 | 17'-4" | |
| 510c | 1 | 16'-8" | |
| 509c | 1 | 15'-10" | |
| 508c | 1 | 15'-2" | |
| 507c | 1 | 14'-4" | |
| 506c | 1 | 13'-8" | |
| 505c | 1 | 12'-10" | |
| 504c | 1 | 12'-2" | |
| 503c | 1 | 11'-4" | |
| 502c | 21 | 7'-8" | |
| 501c | 38 | 6'-5" | |
| TOTAL #5 BARS | | | 576 |
| | | | |
| 402c | 80 | 2'-11" | |
| 401c | 27 | 2'-8" | |
| #4 | 2 | 21'-0" | |
| TOTAL #4 BARS | | | 232 |
| | | | |
| TOTAL PLAIN REINF. | | | 4544 |
| | | | |
| CONCRETE | | | |
| CLASS "B" IN FOOTINGS | | | |
| Pour No. 1 | | 11.1 Cys. | |
| TOTAL CLASS "B" IN FOOTINGS | | | 11.1 Cys. |
| CLASS "A" IN SUBSTRUCTURE | | | |
| Pour No. 2 | | 10.9 Cys. | |
| Pour No. 3 | | 18.0 Cys. | |
| TOTAL CLASS "A" IN SUBSTRUCTURE | | | 28.9 Cys. |
| | | | |
| MISCELLANEOUS | | | |
| Surface Seal | | | 62 Sft. |
| Foundation Excavation (Unclassified) | | | 80 Cys. |
| "B" Borrow for Structure Backfill | | | 64 Cys. |
| Anchor Plate, AP-2 | | | 5 Each |
| Field Drilled Holes in Concrete | | | 18 Each |
| Masonry Coating | | | 55 Sft. |

## NOTES:

- For Reinforcing Bar Notes and Bar Bending Details, see Bridge Std. C1.
- For Bearing Details, see Dwg. D13.
- For General Notes, see Dwg. D2.

BENT NO. 2, NO. 3 AND NO. 4 DETAILS AND BILL OF MATERIALS

INDIANA DEPARTMENT OF TRANSPORTATION

MARION COUNTY

SCALE:- ⅜" = 1'-0 Unless Otherwise Noted

DATE:- December 7, 1994

Dennis R. Clark

DRAWING:- D11 OF 17 SHEET:- 17 OF 67

PROJECT:- NH/465-4(284)125 STATION:- x

BRIDGE CONTRACT NO. B-21773

BRIDGE FILE:- I-465-127-5275B C

DENNIS R. CLARK REGISTERED No. 17234 STATE OF INDIANA PROFESSIONAL ENGINEER

| | | | |
|---|---|---|---|
| DESIGNED | DPJ | C'K'D | DRC |
| DRAWN | PCR | C'K'D | DRC |
| TRACED | | C'K'D | |

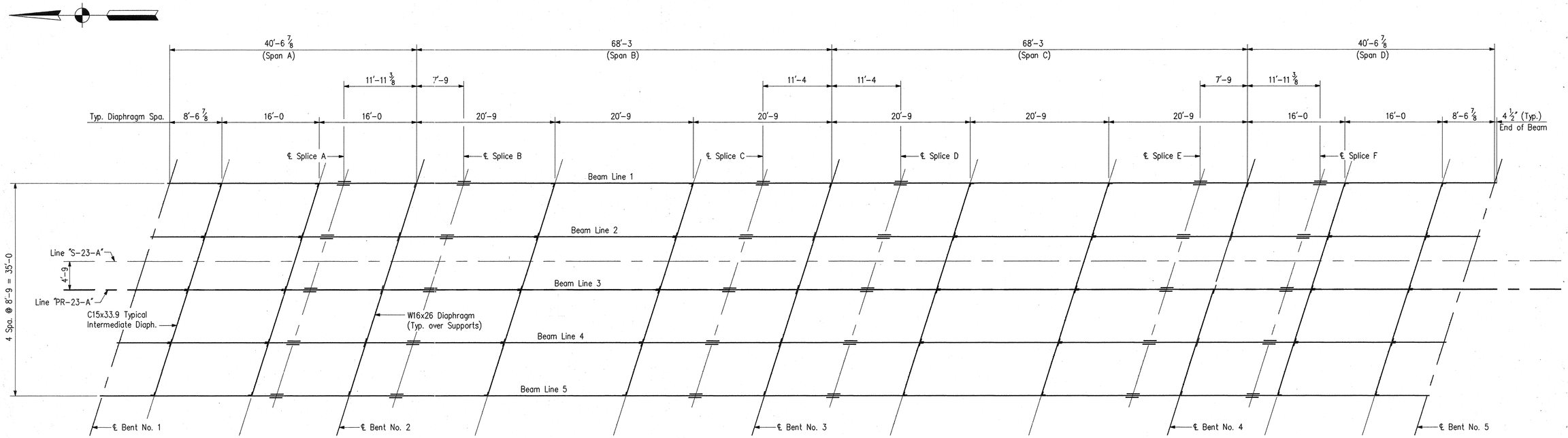


## FRAMING PLAN

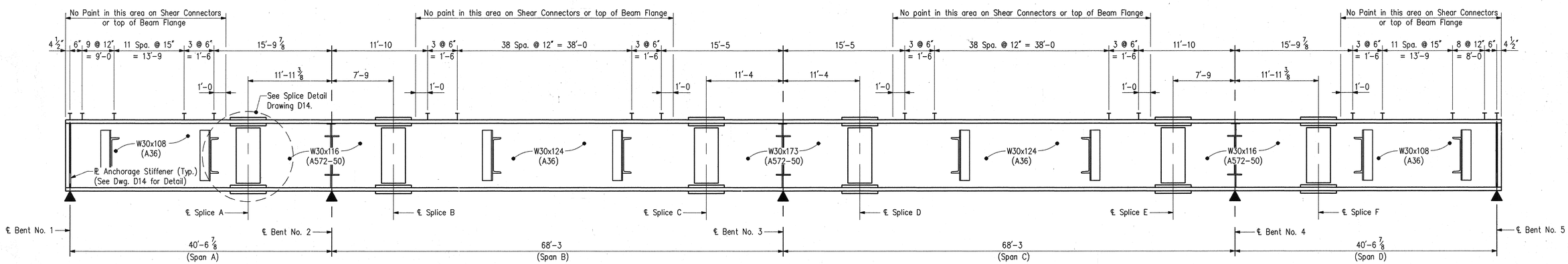


## TYPICAL BEAM ELEVATION

No Scale

## ESTIMATED QUANTITIES:

Structural Steel 164,907 Lbs.
(Includes 42,462 Lbs. A572-Grade 50
and 306 Lbs. A514)

## NOTES:

- For Fabrication Notes, See Special Provisions.
- All Structural Steel to be ASTM A36 unless otherwise noted.
- For additional Steel Details, See Dwg. D13 & D14.

## FRAMING PLAN AND STRUCTURAL STEEL DETAILS

# INDIANA DEPARTMENT OF TRANSPORTATION

MARION COUNTY

SCALE:- 1/8" = 1'-0 Unless Otherwise Noted

DATE:- December 7, 1994

Dennis R. Clark

DENNIS R. CLARK REGISTERED No. 17234 STATE OF INDIANA PROFESSIONAL ENGINEER

DRAWING:- D12 OF 17 SHEET:- 18 OF 67

PROJECT:- NH/465-4(284)125 STATION:- x

BRIDGE CONTRACT NO. B-21773

BRIDGE FILE:- I-465-127-5275B

| | | | |
|---|---|---|---|
| DESIGNED | DPJ | C'K'D | DRC |
| DRAWN | PCR | C'K'D | DRC |
| TRACED | | C'K'D | |

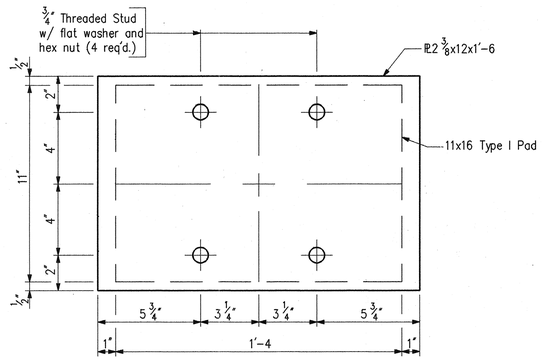


PLAN

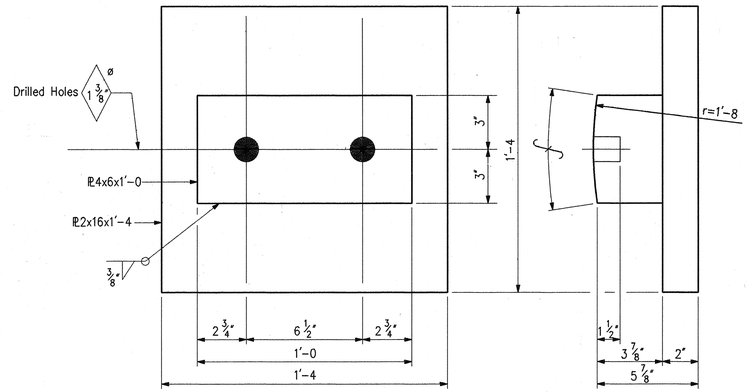


FIXED BASE (FB-3)

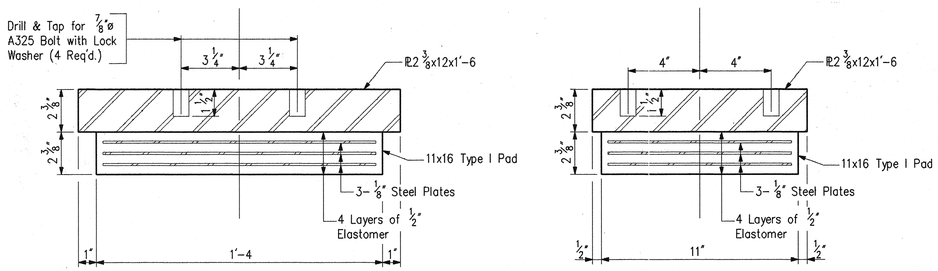


END ELEVATION

SIDE ELEVATION

TYPE I BEARING ASSEMBLY

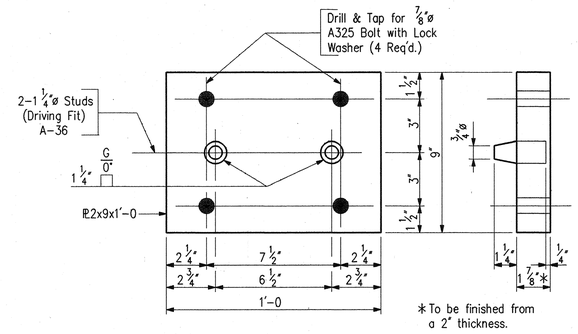


TOP SHOE (TS-3)

(A-514)

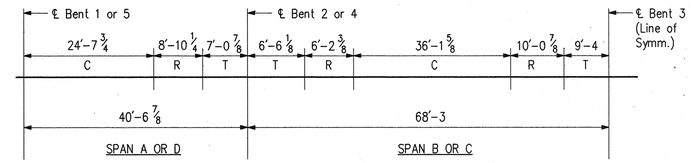


T = Top Flange in Tension
C = Top Flange in Compression
R = Top Flange in Reversal

TENSION-COMPRESSION DIAGRAM

No Scale

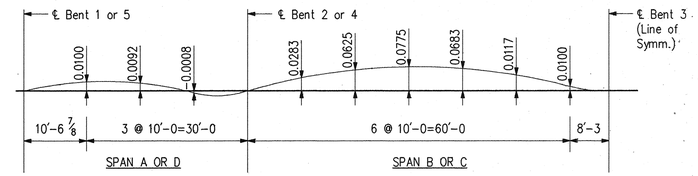


CONCRETE DEAD LOAD DEFLECTIONS (Ft.)

No Scale

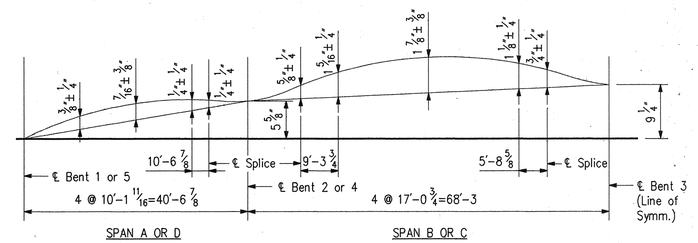


NO LOAD CAMBER AND REAMING DIAGRAM

No Scale

| BEAM LINE | SPLICE A | SPLICE B | SPLICE C | SPLICE D | SPLICE E | SPLICE F |
|---|---|---|---|---|---|---|
| 1 | 756.740 | 756.935 | 757.140 | 757.130 | 756.860 | 756.640 |
| 2 | 756.885 | 757.090 | 757.315 | 757.310 | 757.060 | 756.845 |
| 3 | 757.035 | 757.245 | 757.485 | 757.490 | 757.255 | 757.050 |
| 4 | 756.830 | 757.045 | 757.305 | 757.315 | 757.100 | 756.900 |
| 5 | 756.625 | 756.850 | 757.125 | 757.145 | 756.945 | 756.755 |

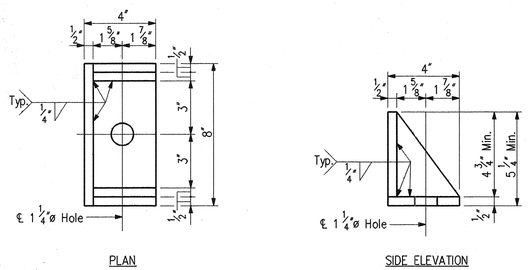


PLAN

SIDE ELEVATION

SIDE RETAINER DETAIL

Bent No. 2 & No. 4 (4 Req'd.)

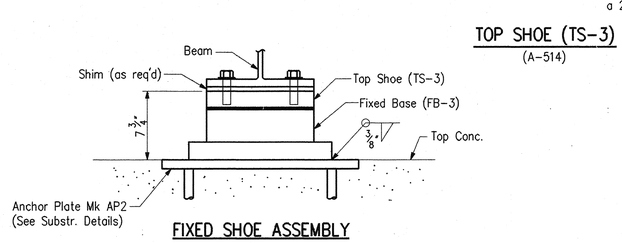


FIXED SHOE ASSEMBLY

Scale: 1 1/2" = 1'-0

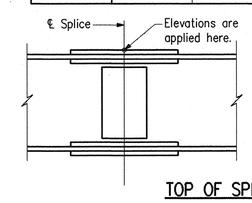


NOTE:
The top of the beams are to be adjusted to the elevations given in the table before bolting field splice connections. The elevations have been calculated assuming all falsework has been removed.

TOP OF SPLICE PLATE ELEVATIONS

No Scale

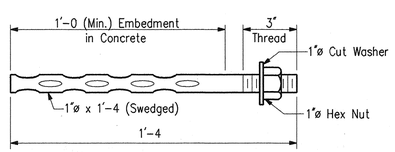


ANCHOR BOLT DETAIL

Bent No. 2 & No. 4 (4 Req'd.)

No Scale

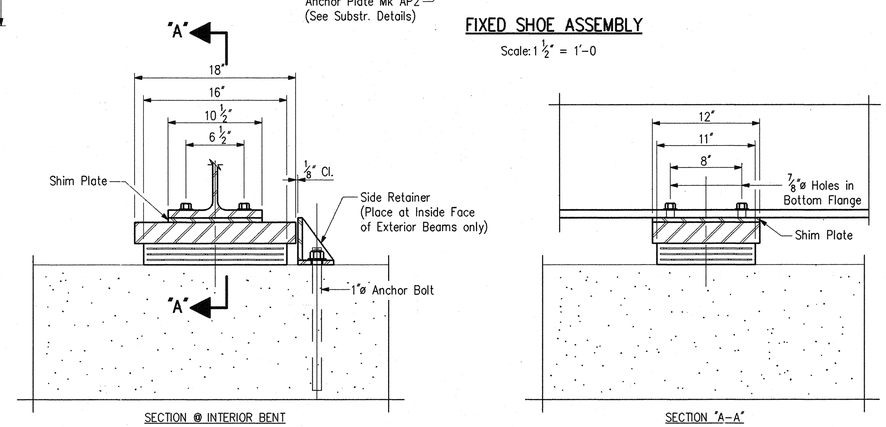


SECTION @ INTERIOR BENT

SECTION "A-A"

TYPE I ELASTOMERIC EXPANSION BEARING

(Bent No. 2 & No. 4) (10 Req'd.)

Scale: 1 1/2"=1'-0

NOTES:

- All Structural Steel A36, unless otherwise noted.
- All bearing assemblies require 1/2" shim.
- For General Notes, see Dwg. D2.
- For Structural Steel fabrication notes, see Special Provisions.
- For additional steel details, see Dwg. D14.

STRUCTURAL STEEL DETAILS

# INDIANA DEPARTMENT OF TRANSPORTATION

MARION COUNTY

SCALE:- 3" = 1'-0, Unless Otherwise Noted

DATE:- December 7, 1994

Dennis R. Clark

DENNIS R. CLARK REGISTERED No. 17234 STATE OF INDIANA PROFESSIONAL ENGINEER

DRAWING:- D13 OF 17 SHEET:- 19 OF 67

PROJECT:- NH/465-4(284)125 STATION:-

BRIDGE CONTRACT NO. B-21773

BRIDGE FILE:- I-465-127-5275

| | | | |
|---|---|---|---|
| DESIGNED | DPJ | C'K'D | DRC |
| DRAWN | DPJ | C'K'D | DRC |
| TRACED | | C'K'D | |

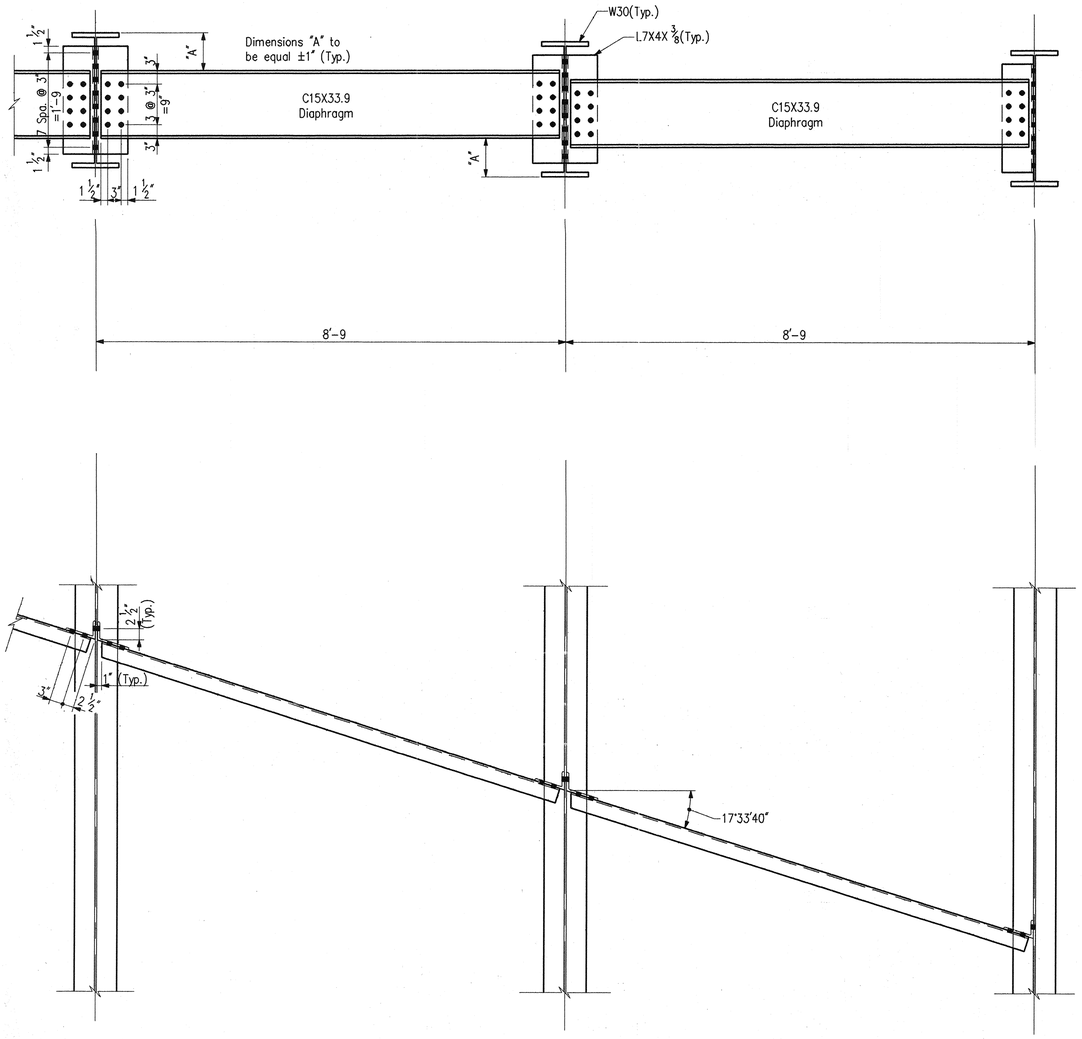


INTERIOR DIAPHRAGM DETAIL

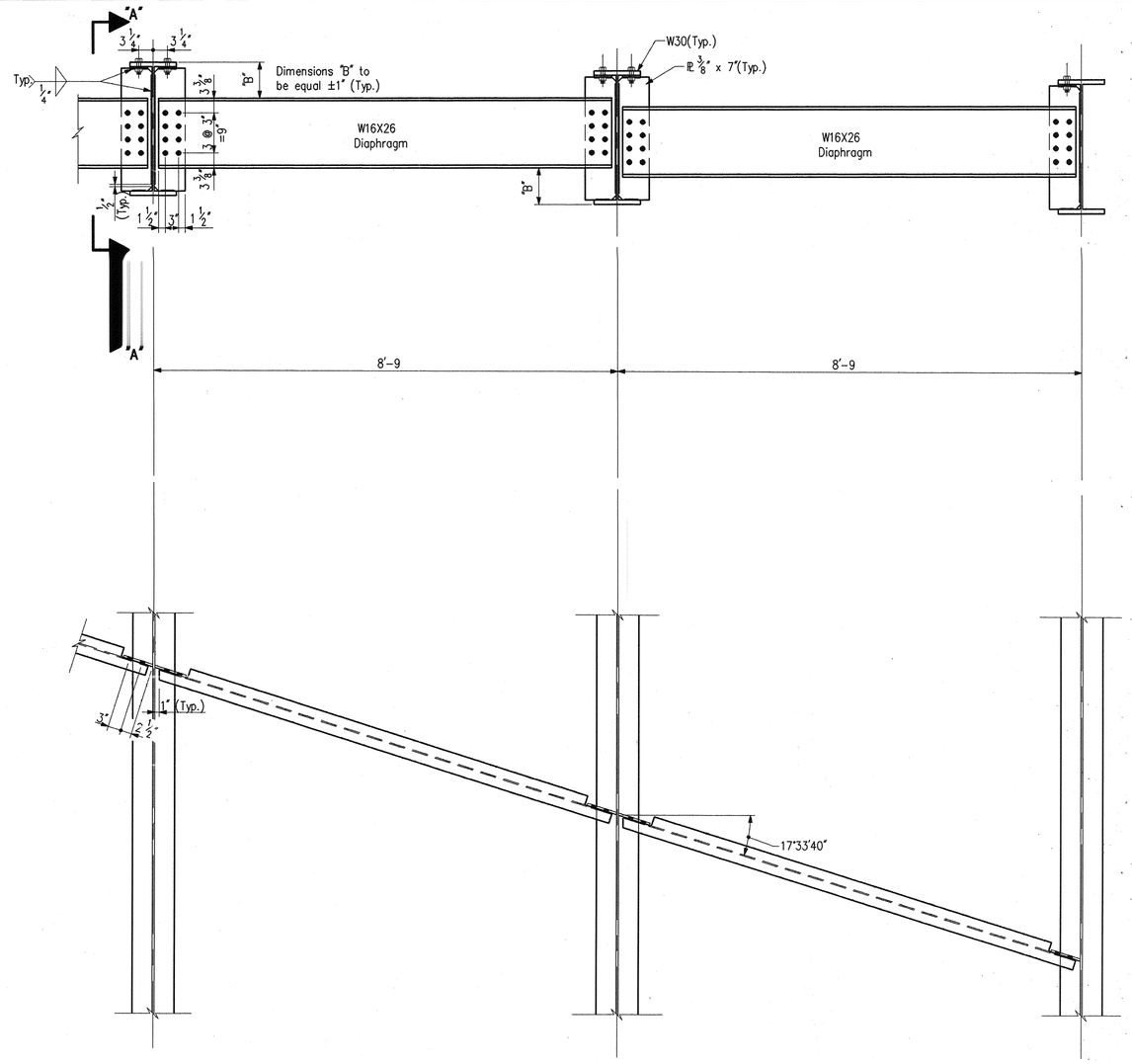


DIAPHRAGM DETAIL @ INTERIOR BENTS

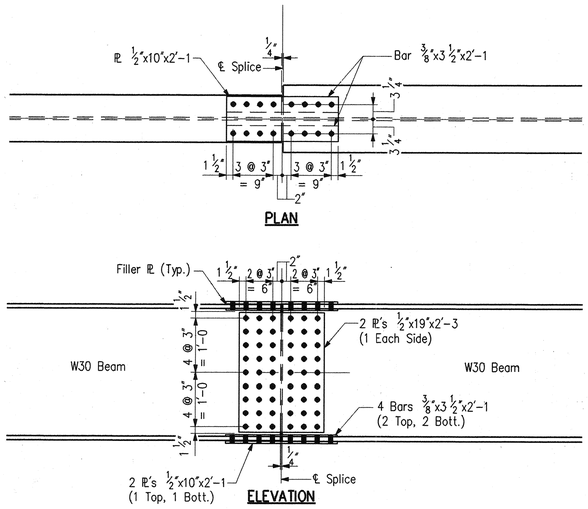


TYPICAL BEAM SPLICE DETAIL

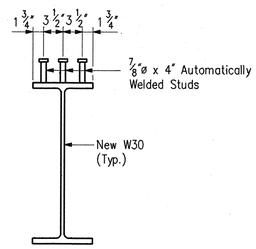


SHEAR CONNECTOR DETAIL

No Scale

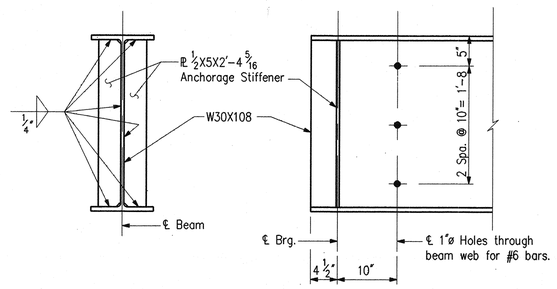


ANCHORAGE STIFFENER DETAIL

No Scale

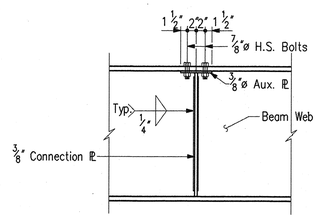


SECTION "A-A"

## NOTES:

- For additional steel details, see Dwg. D13.
- For General Notes, see Dwg. D2.

STRUCTURAL STEEL DETAILS

# INDIANA DEPARTMENT OF TRANSPORTATION

MARION COUNTY

SCALE:- 3/4"=1'-0, Unless otherwise noted

DATE:- December 7, 1994

Dennis R. Clark

DENNIS R. CLARK REGISTERED No. 17234 STATE OF INDIANA PROFESSIONAL ENGINEER

DRAWING:- D14 OF 17 SHEET:- 20 OF 67

PROJECT:- NH/465-4(284)125 STATION:-

BRIDGE CONTRACT NO. B-21773

BRIDGE FILE:- I-465-127-5275 C

| | | | |
|---|---|---|---|
| DESIGNED | dow | C'K'D | DRC |
| DRAWN | dow | C'K'D | DRC |
| TRACED | | C'K'D | |

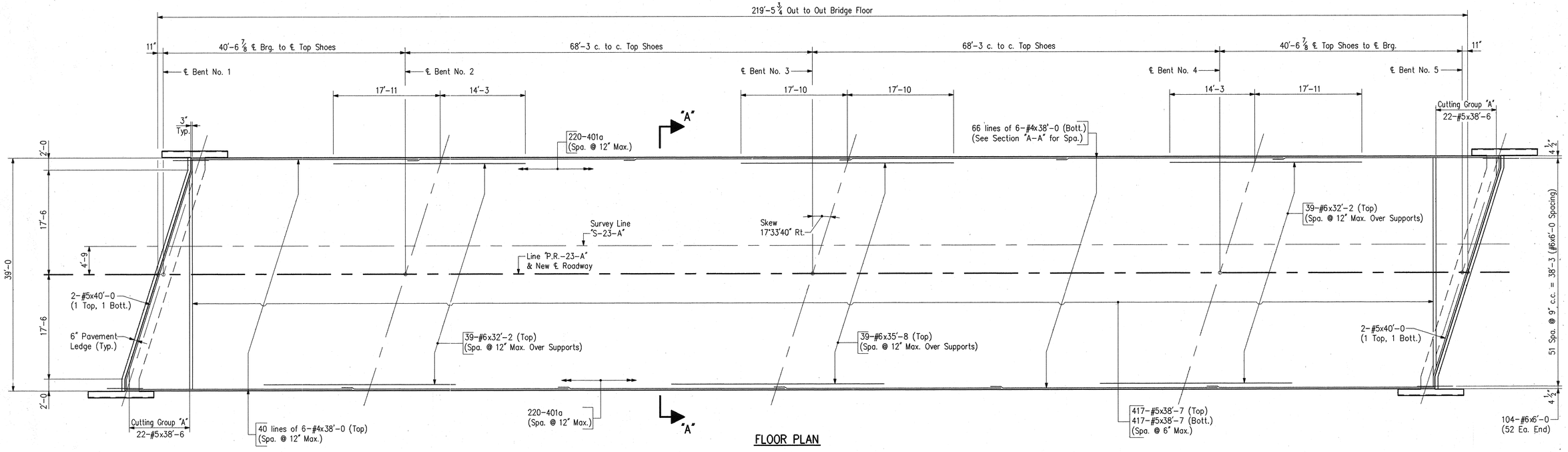


## FLOOR PLAN

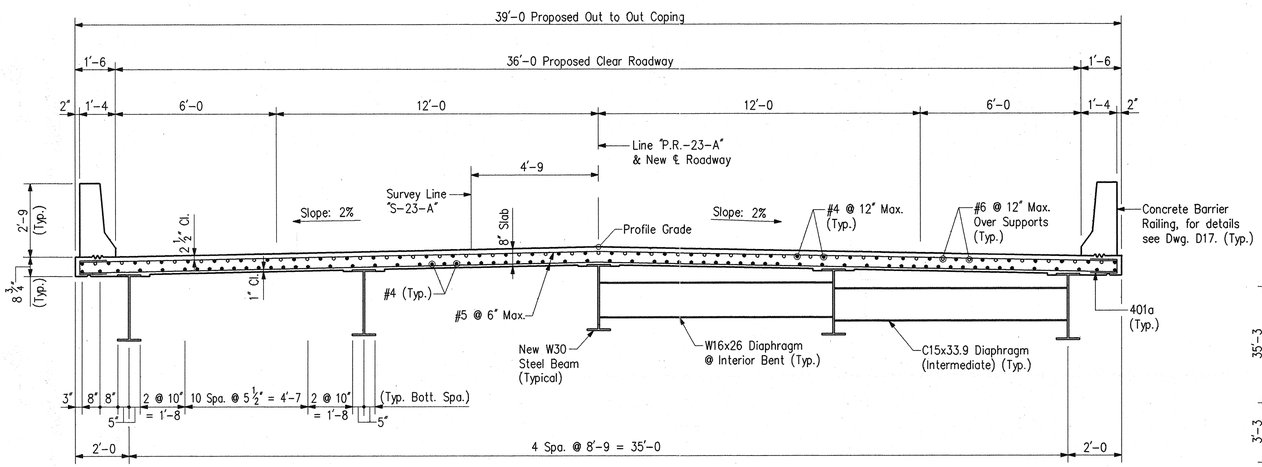


## SECTION "A-A"

Scale: 3/8" = 1'-0

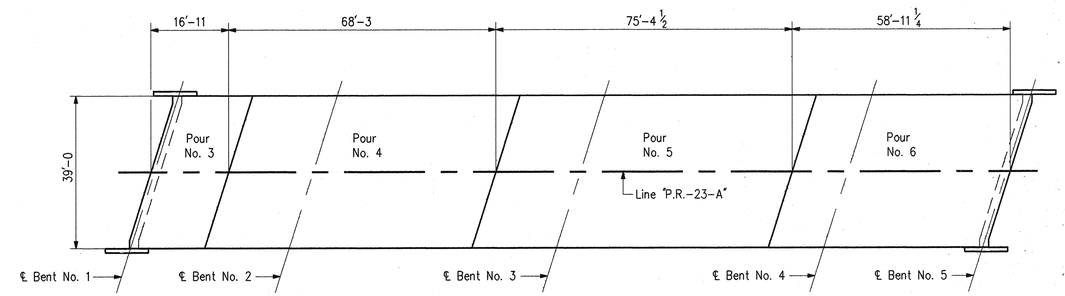


## POUR DIAGRAM

No Scale

NOTE:
For Pour No. 1 and No. 2, see Dwg. D4 & D6.

## NOTES:

- For Reinforcing Notes and Bar Bending Details, See Bridge Std. C1.
- Min. Lap for #4 Bar = 1'-7.
- For General Notes, see Dwg. D2.
- For Bill of Materials, see Dwg. D7.
- Screed Data available upon request.
- Permanent metal deck forms may be substituted for removable forms on this structure.
- Sequence of pours to be made in order of pour numbers.

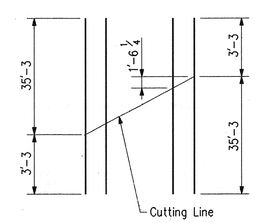


## CUTTING GROUP "A"

21 Spa. @ 6" Max. = 10'-1 1/2
22-#5x38'-6
(Top & Bottom Reinforcing)

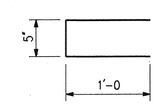


## 401a x 2'-5

## FLOOR DETAILS

# INDIANA DEPARTMENT OF TRANSPORTATION

MARION COUNTY

SCALE:- 1/8" = 1'-0 Unless Otherwise Noted

DATE:- December 7, 1994

Dennis R. Clark

DENNIS R. CLARK REGISTERED No. 17234 STATE OF INDIANA PROFESSIONAL ENGINEER

DRAWING:- D15 OF 17 SHEET:- 21 OF 67

PROJECT:- NH/465-4(284)125 STATION:- x

BRIDGE CONTRACT NO. B-21773

BRIDGE FILE:- I-465-127-5275 C

| | | | |
|---|---|---|---|
| DESIGNED | DPJ | C'K'D | DRC |
| DRAWN | PCR | C'K'D | DRC |
| TRACED | | C'K'D | |

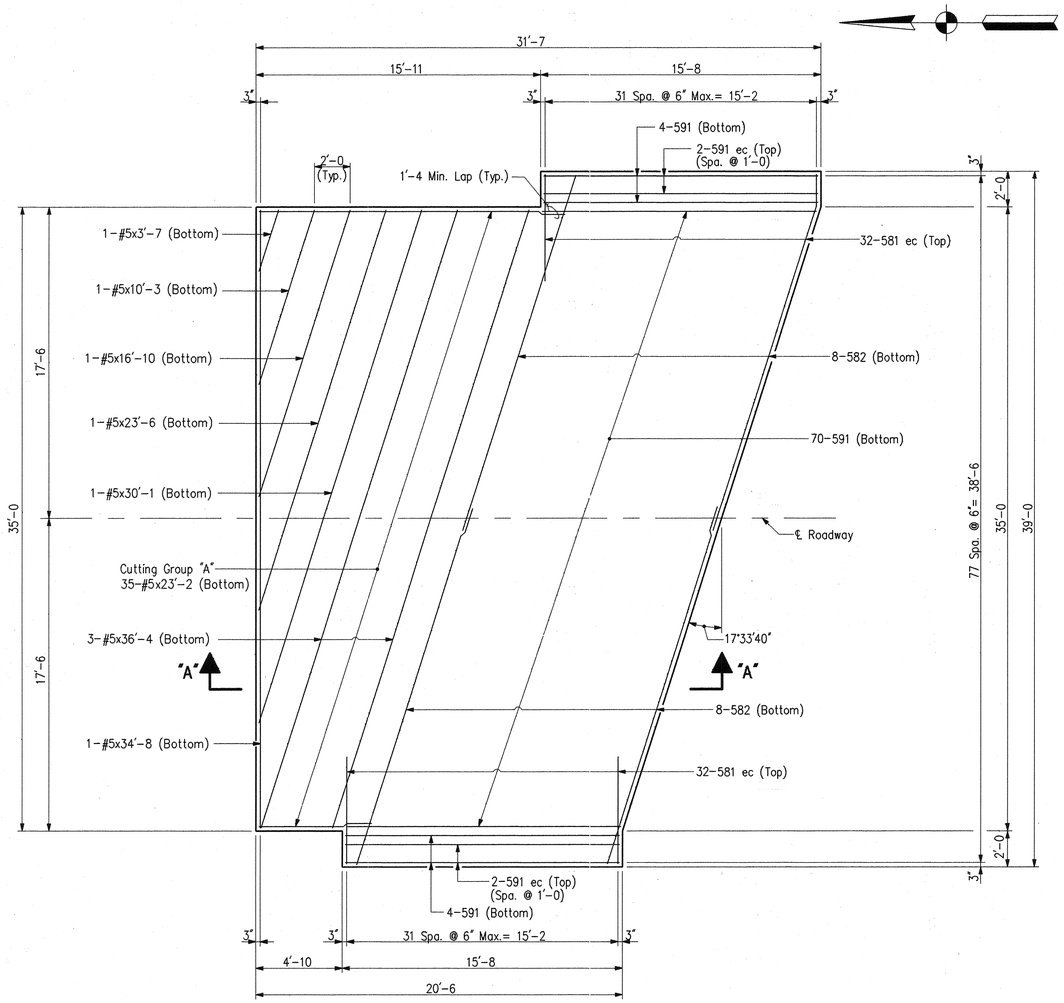


**PLAN**
North Approach Shown
South Approach Same by 180° Rotation

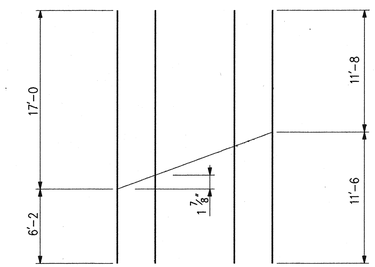


**CUTTING GROUP "A"**
35-#5x23'-2
34 Spa. @ 6"=17'-0

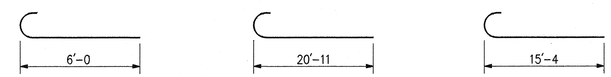


**581x6'-7** **582x21'-6** **591x15'-11**

## *BILL OF MATERIALS

| REINFORCING STEEL | | | |
|---|---|---|---|
| SIZE & MARK | No. OF BARS | LENGTH | WEIGHT (LBS.) |
| EPOXY COATED REINFORCING | | | |
| 591 | 4 | 15'-11" | |
| 581 | 64 | 6'-7" | |
| TOTAL #5 BARS | | | 506 |
| TOTAL EPOXY REINF. | | | 506 |
| PLAIN REINFORCING | | | |
| 591 | 78 | 15'-11" | |
| 582 | 16 | 21'-6" | |
| #5 | 3 | 36'-4" | |
| #5 | 1 | 34'-8" | |
| #5 | 1 | 30'-1" | |
| #5 | 1 | 23'-6" | |
| #5 | 35 | 23'-2" | |
| #5 | 1 | 16'-10" | |
| #5 | 1 | 10'-3" | |
| #5 | 1 | 3'-7" | |
| TOTAL #5 BARS | | | 2737 |
| TOTAL PLAIN REINF. | | | 2737 |
| CONCRETE | | | |
| Cement Concrete Pavement, Reinf., 10" | | | 108 Sys. |
| MISCELLANEOUS | | | |
| Removal of Pavement | | | 69 Sys. |
| Compacted Agg. Base, Type "O", No. 53 | | | 18 Tons |

*Quantities Shown are for one approach slab, two (2) req'd.

**NOTES:**

- For Reinforcing Bar Notes and Bar Bending Details, See Bridge Standard C1.

ec Indicates Epoxy Coated Reinforcing.

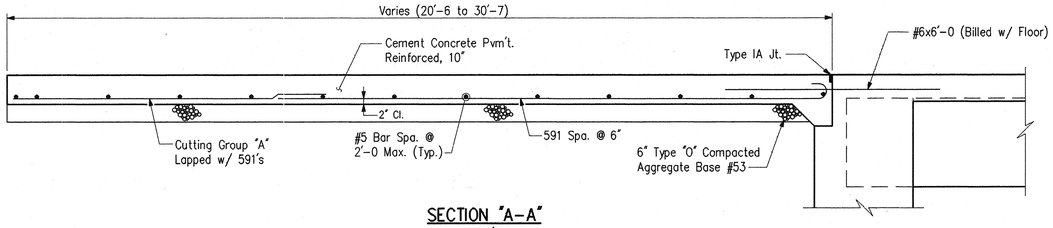


**SECTION "A-A"**
Scale: 1/2"=1'-0

R.C. BRIDGE APPROACH DETAILS

INDIANA DEPARTMENT OF TRANSPORTATION

MARION COUNTY

SCALE:- 1/4" = 1'-0 Unless Otherwise Noted

DATE:- December 7, 1994

DRAWING:- D16 OF 17 SHEET:- 22 OF 67

PROJECT:- NH/465-4(284)125 STATION:- x

BRIDGE CONTRACT NO. B-21773

BRIDGE FILE:- I-465-127-5275 C

DENNIS R. CLARK REGISTERED No. 17234 STATE OF INDIANA PROFESSIONAL ENGINEER

| | | | |
|---|---|---|---|
| DESIGNED | DPJ | C'K'D | PCR |
| DRAWN | DPJ | C'K'D | PCR |
| TRACED | | C'K'D | |

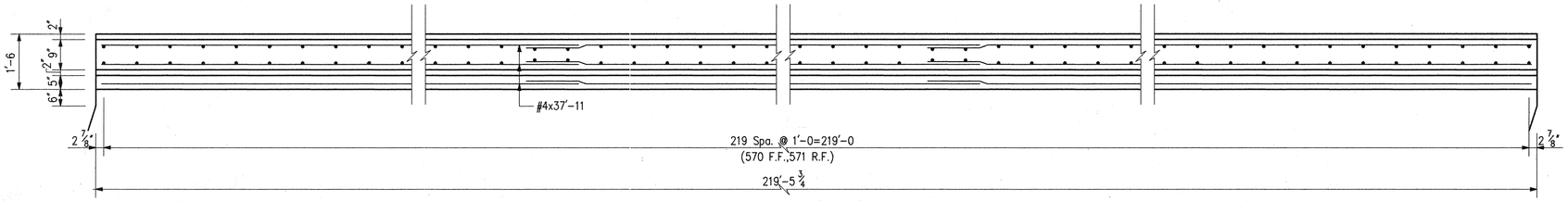


PLAN

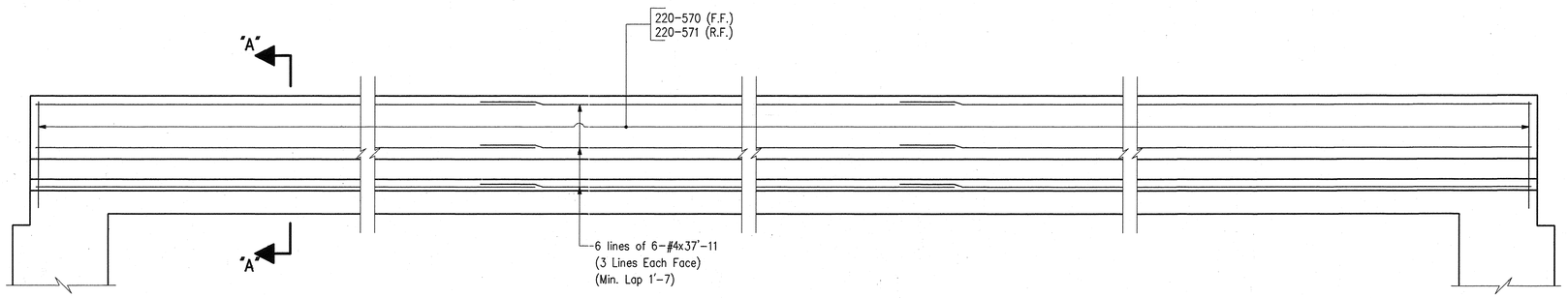


ELEVATION

## *BILL OF MATERIALS

| REINFORCING STEEL | | | |
|---|---|---|---|
| SIZE & MARK | No. OF BARS | LENGTH | WEIGHT (LBS.) |
| EPOXY COATED REINFORCING | | | |
| 571 | 220 | 3'-9" | |
| 570 | 220 | 3'-11" | |
| TOTAL #5 BARS | | | 1759 |
| | | | |
| #4 | 36 | 37'-11" | |
| TOTAL #4 BARS | | | 912 |
| | | | |
| TOTAL EPOXY REINF. | | | 2671 |
| | | | |
| CONCRETE | | | |
| TOTAL CONCRETE RAILING, CLASS "C" | | | 21.4 CYS. |
| | | | |
| MISCELLANEOUS | | | |
| Barrier Delineators | | | 12 Each |
| Surface Seal | | | 1499 Sft. |
| Masonry Coating | | | 1499 Sft. |
| Concrete Bridge Railing Transition, Type TGB | | | 2 Each |

*Quantities for one rail only, two (2) req'd.

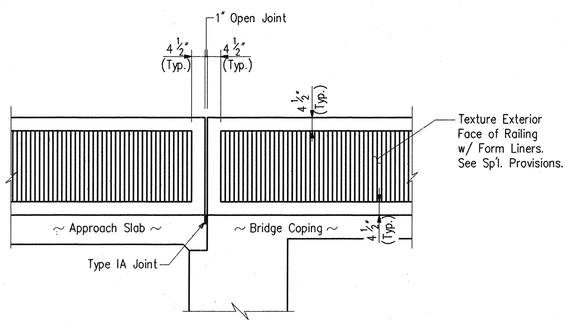


RAILING TEXTURE DETAIL

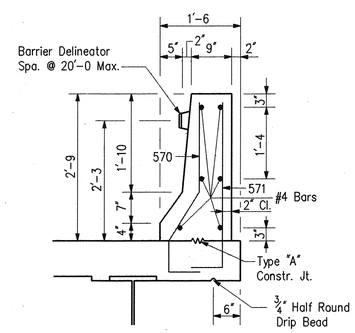


SECTION "A-A"

Scale: 3/4"=1'-0

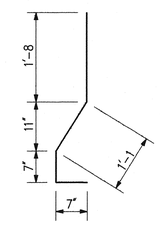


570 X 3'-11

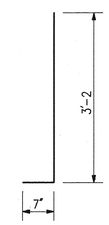


571 X 3'-9

NOTES:

- For Reinforcing Bar Notes and Bar Bending Details, See Bridge Std. C1.
- For Transition Details, See Br. Std. BR-1.
- For Constr. Jt. Type "A" Details, See Bridge Std. C3.
- For General Notes, see Dwg. D2.

CONCRETE RAILING DETAILS

INDIANA DEPARTMENT OF TRANSPORTATION

MARION COUNTY

SCALE:- 1/2" = 1'-0, Unless otherwise noted

DATE:- December 7, 1994

Dennis R. Clark

DRAWING:- D17 OF 17 SHEET:- 23 OF 67

PROJECT:- NH/465-4(284)125 STATION:-

BRIDGE CONTRACT NO. B-21773

BRIDGE FILE:- I-465-127-5275 C

DENNIS R. CLARK REGISTERED No. 17234 STATE OF INDIANA PROFESSIONAL ENGINEER

| | | | |
|---|---|---|---|
| DESIGNED | DPJ | C'K'D | PCR |
| DRAWN | DPJ | C'K'D | PCR |
| TRACED | | C'K'D | |

BRIDGE FILE

## STRUCTURE QUANTITIES

| ITEM | CONCRETE CLASS C SUPERSTR CU. YDS. | CONCRETE CLASS A SUBSTR CU. YDS. | CONCRETE CLASS B ABOVE FTG. CU. YDS. | CONCRETE CLASS B IN FTG. CU. YDS. | FIELD DRILLED HOLES IN CONCRETE EACH | ANCHOR PLATES MK-AP2 EACH | CONCRETE RAILING CLASS C CU. YDS. | CONCRETE RAILING CLASS C LIN. FT. | REINF. STEEL TOTAL LBS. | STRUCT. STEEL *** LBS. | EPOXY COATED REINF. STEEL LBS. | ANCHOR PLATES MK-AP1 EACH | PILES EPOXY COATED SHELLS NO. | PILES EPOXY COATED SHELLS LIN. FT. | PILES TREATED TIMBER NO. | PILES TREATED TIMBER LIN. FT. | PILES STEEL ENCASED CONC. 12"ø NO. | PILES STEEL ENCASED CONC. 12"ø LIN. FT. | PILES STEEL H BEARING NO. | PILES STEEL H BEARING LIN. FT. | CAST IRON DRAIN PIPE LBS. | CAST IRON, GRATES, BASINS, & FITTINGS LBS. | CONCRETE BARRIER RAILING LIN. FT. | EXP. JOINT TYPE LIN. FT. | EXP. JOINT CLASS LIN. FT. | CONC. STR. MEMBERS BOX BEAMS TYPE SQ. FT. | CONC. STR. MEMBERS I BEAM TYPE LIN. FT. | CEMENT CONCRETE, PVM'T REINF. 10" SQ. YDS. | COMP. AGGR. BASE TYPE "O" NO. 53 TONS | CONC. BRIDGE RAILING TRANS. TYPE TGB EACH | 4" CONCRETE SLOPEWALL SQ. YDS. | ELASTOMERIC EXP. BRG. TYPE I EACH | BARRIER DELINEATORS EACH | B-BORROW FOR STRUCT. BACKFILL CU. YDS. | FINISHING AND CURING SQ. YDS. | MASONRY COATING SQ. FT. | SURFACE SEAL SQ. FT. |
|---|---|---|---|---|---|---|---|---|---|---|---|---|---|---|---|---|---|---|---|---|---|---|---|---|---|---|---|---|---|---|---|---|---|---|---|---|---|---|
| SUPERSTRUCTURE | 288.8 | | | | | | | | | 164,907 | 59,146 | | | | | | | | | | | | | | | | | | | | | | | | | | 967 | 8943 |
| WINGWALLS | 28.3 | | | | | | | | | | | | | | | | | | | | | | | | | | | | | | | | | | | | 716 | |
| BENT NO. 1 | | | | | | | | | | | 7284 | 10 | | | | | 7 | 245 | | | | | | | | | | | | | 63 | | | | 33 | | | |
| BENT NO. 2 | | 33.0 | | 6.8 | 22 | | | | 4002 | | | | | | | | | | | | | | | | | | | | | | | 5 | | 60 | | | 6 |
| BENT NO. 3 | | 28.9 | | 11.1 | 18 | 5 | | | 4544 | | | | | | | | | | | | | | | | | | | | | | | | | 64 | | 55 | 62 |
| BENT NO. 4 | | 33.0 | | 6.8 | 22 | | | | 4002 | | | | | | | | | | | | | | | | | | | | | | | 5 | | 60 | | | 6 |
| BENT NO. 5 | | | | | | | | | | | 7298 | 10 | | | | | 7 | 245 | | | | | | | | | | | | | 63 | | | 33 | | | |
| R.C. APPROACHES | | | | | | | | | 5474 | | 1012 | | | | | | | | | | | | | | | | | 216 | 36 | 4 | | | | | | | |
| BRIDGE RAILING | | | | | | | 42.8 | | | | 5342 | | | | | | | | | | | | | | | | | | | | | | 24 | | | 2998 | 2998 |
| PIPE EXTENSION | | | | | | | | | 147 | | | | | | | | | | | | | | | | | | | | | | | | | 27 | | | |
| I-465 (MEDIAN BARRIER RAILING) | | | | | | | | | | | | | | | | | | | | | | 22 | | | | | | | | | | | | | | 166 | 166 |
| Reinf. Steel for Approach Structures | | | | | | | | | | | | | | | | | | | | | | | | | | | | | | | | | | | | | | |
| Reinf. Steel for R.C. Bridge Approaches | | | | | | | | | | | | | | | | | | | | | | | | | | | | | | | | | | | | | | |
| Reinf. Steel for Lip Gutter, Pvmt., Tapers, etc. | | | | | | | | | | | | | | | | | | | | | | | | | | | | | | | | | | | | | | |
| TOTALS | 317.1 | 94.9 | | 24.7 | 62 | 5 | 42.8 | | 18,169 | 164,907 | 80,082 | 20 | | | | | 14 | 490 | | | | 22 | | | | | | 216 | 36 | 4 | 126 | 10 | 24 | 277 | | 4902 | 12,181 |

BRIDGE FILE

## APPROACH STRUCTURES

| STRUCT. NO. | LOCATION | DESCRIPTION SIZE | DESCRIPTION KIND | LENGTH LIN. FT. | CONC. CL. A IN STRS. CU. YDS. | REINF. STEEL LBS. | PIPE END SEC. EACH | TWIN PIPE ANCHOR EACH | REMARKS |
|---|---|---|---|---|---|---|---|---|---|
| 18 | 51+50 "PR-23-A" | 66" | Twin Structural Plate Steel | 20 | 4 | 147 | | 1 | Extend existing twin pipe in kind. |
| | | | | | | | | | 10 Lft. each pipe |
| | | | | TOTALS | 4 | 147 | | 1 | |

Total of Reinforcing Steel Carried to "Structure Quantities"

## PIPE FOR UNDERDRAINS

| LINE | LOCATION FROM STATION | LOCATION TO STATION | 6" GROUP "K" PIPE-LFT. LEFT | 6" GROUP "K" PIPE-LFT. RIGHT | 6" OUTLETS TEE | 6" OUTLETS 90° ELBOW | 6" OUTLETS 45° ELBOW | 6" OUTLETS F.B.C.C.S.P. 0.052 IN. (LFT.) | 6" OUTLETS STATION | AGGREGATE NO. 8 FOR UNDERDRAINS (CYS.) | DELINEATOR POSTS (EACH) | SODDING (SYS.) | REMARKS |
|---|---|---|---|---|---|---|---|---|---|---|---|---|---|
| "PR-23-A" | 44+50 | 48+63 | | 421 | | | 1 | 21 | 44+50 | 37.9 | 1 | 2 | |
| "PR-23-A" | 44+50 | 48+63 | 407 | | | | 1 | 21 | 44+50 | 36.6 | 1 | 2 | |
| "PR-23-A" | 51+36 | 56+50 | | 513 | | | 1 | 21 | 51+36 | 46.2 | 1 | 2 | |
| "PR-23-A" | 51+36 | 56+50 | 521 | | | | 1 | 21 | 51+36 | 46.9 | 1 | 2 | |
| SUB-TOTALS | | | 928 | 934 | | | 4 | 84 | | 167.6 | 4 | 8 | ADDITIONAL LENGTH ALLOWANCE: 5 Lft. for each tee. 2 Lft. for each elbow. |
| TOTALS | | | 1862 | | | | 4 | 92* | | 167.6 | 4 | 8 | |

* Includes tees and elbows

## PAINTED LINES

| STATION TO STATION | LINE | 4 IN. SOLID YELLOW (LFT.) | 4 IN. SOLID WHITE (LFT.) | REMARKS |
|---|---|---|---|---|
| 44+50 RT. TO 56+50.33 RT. | "PR-23-A" | 1200.33 | | ℄ OF ROAD |
| 44+50 LT. TO 56+50.33 LT. | "PR-23-A" | 1200.33 | | ℄ OF ROAD |
| INCIDENTAL CONSTRUCTION | "S-23-A" | 333.00 | | INCLUDE IN 4" SOLID YELLOW LINE TOTAL |
| 44+50 RT. TO 56+50.33 RT. | "PR-23-A" | | 1211.87 | MEASURED ALONG RT. EDGE OF PVM'T. |
| 44+50 LT. TO 56+50.33 LT. | "PR-23-A" | | 1192.73 | MEASURED ALONG LT. EDGE OF PVM'T. |
| INCIDENTAL CONSTRUCTION | "S-23-A" | | 329.81 | INCLUDE IN 4" SOLID WHITE LINE TOTAL |
| | TOTALS | 2733.66 | 2734.41 | |

JUNE 1984

SUMMARIZED DPJ C'K'D DRC
TRACED RGS C'K'D DRC

SF-22332

NOTES:
Weight of Spirals includes weight of 1 1/2 extra turns top and bottom.
Spacers and 1 1/2 turns at laps included in cost of Spiral.
*** The weight of structural steel is approximate only, and it shall be the Contractor's responsibility to determine the weight on which he bases his bid.
For Test Bar Samples, see Bridge Standard C1.

## REVISIONS

| DATE | ITEM |
|---|---|
| | |

# BRIDGE SUMMARY

## INDIANA DEPARTMENT OF HIGHWAYS

DATE December 7, 1994

SHEET 24 OF 67

PROJECT: NH/465-4(284)125
CONTRACT NO: B-21773
BRIDGE FILE: I-465-127-5275 C

DENNIS R. CLARK REGISTERED No. 17234 STATE OF INDIANA PROFESSIONAL ENGINEER

TP103