Figure 4-13 Absorptive aggregate popout on spillway floor.

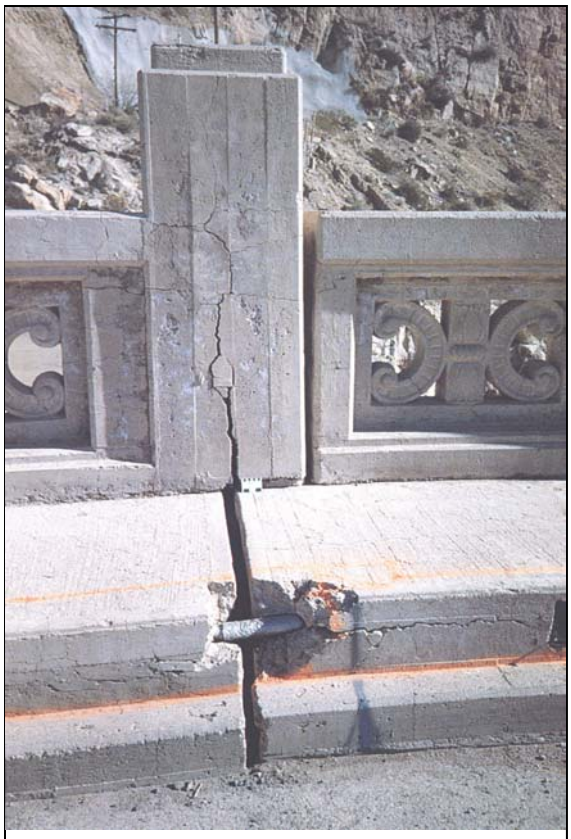

Figure 4-14 Multiple causes of damage are apparent in this photograph. Poor design or construction practices placed the electrical conduit too near the surface. A combination of freezing and thawing deterioration and alkali-aggregate reaction is responsible for the cracking and surface spalling on the parapet wall.

If the original damage is the result of a one-time event, such as a river barge hitting a bridge pier, an earthquake, or structural overload, remediation of the cause of damage need not be addressed. It is unlikely that such an event will occur again. If, however, the cause of damage is of a continuing or recurring nature, remediation must be addressed, or the repair method and materials must in some manner be made resistant to predictable future damage. A quick review of common causes of damage usually reveals that the majority of them are of a continuing or recurring nature.

It is important to differentiate between causes of damage and symptoms of damage. In the above case of the river barge hitting the bridge pier, the cause of damage is the impact to the concrete. The resultant cracking is a symptom of that impact. In the event of freezing and thawing deterioration to modem concrete, the cause of the damage may well lie with the use of low quality or dirty fine or coarse aggregate in the concrete mixture or the lack of entrained air. The resultant scaling and cracking is a symptom of low durability concrete. The application of high cost repairs to low quality concrete is usually economically questionable. Cavitation damage occurs when high velocity water flows encounter discontinuities on the flow surface. Thus, cavitation is just a symptom of the problem.

It is somewhat common to find that multiple causes of damage exist. Improper design, low quality materials, or poor construction practices reduce the durability of concrete and increase its susceptibility to deterioration from other causes. Similarly, sulfate and alkali-silica deterioration cause cracks in the exterior surfaces of concrete that allow accelerated deterioration from cycles of freezing and thawing. The deterioration resulting from the lowered resistance to cyclic freezing and thawing might mask the original cause of the damage.

Finally, it is important to fully understand the original design intent and concepts of a damaged structure before attempting repair. Low quality local aggregate may have

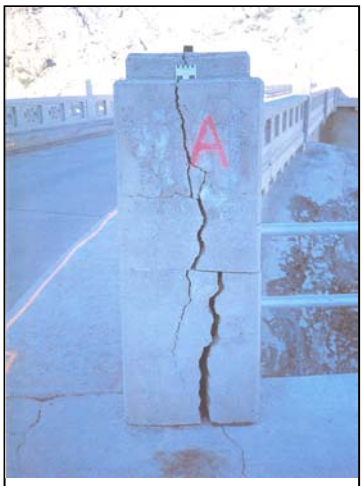

Figure 4-15 Severe cracking caused by alkali-aggregate reaction.

intentionally been used in the concrete mix because the costs associated with hauling higher quality aggregate great distances may have made it more economical to repair the structure when required at some future date. A classic example of misunderstanding the intent of design recently occurred on a project in Nebraska. A concrete sluiceway that would experience great quantities of waterborne sand was designed with an abrasion-resistant protective overlay of silica fume concrete. This overlay was intentionally designed so that it would not bond to the base concrete, making replacement easier when required by the anticipated abrasion-erosion damage. This design concept, however, was not communicated to construction personnel who became deeply concerned when the silica fume overlay was found to be "disbonded" shortly after placement and curing was completed. Some difficulty was experienced in preventing field personnel from requiring the construction contractor to repair a perfectly serviceable overlay that was performing exactly as intended.

2. Evaluate the Extent of Damage

The next step of the repair process is to evaluate the extent and severity of damage. The intent of this step is to determine how much concrete has been damaged and how this damage will affect serviceability of the structure (how long, how wide, how deep, and how much of the structure is involved). This activity includes prediction of how quickly the damage is occurring and what progression of the damage is likely.

The importance of determining the severity of the damage should be understood. Damage resulting from cyclic freezing and thawing, sulfate exposure, and alkali-aggregate reaction appears quite similar. The damage caused by alkali-aggregate reaction and sulfates is far more severe than that caused by freeze-thaw, although all three of these causes can result in destruction of the concrete and loss of the affected structure. The main difference in severity lies in the fact that proper maintenance can reduce damage caused by freeze-thaw. There is no proven method of reducing damage caused by alkali-aggregate reaction or sulfate exposure.

Figure 4-16 This freezing and thawing deterioration should have been repaired before it advanced to the point that wall replacement or removal is the only option.

The most common technique used to determine the extent of damage is sounding the damaged and surrounding undamaged concrete with a hammer. If performed by experienced personnel, this simple technique, when combined with a close visual inspection, will provide the needed information in many instances of concrete damage.

In sounding suspected delaminated or disbonded concrete, it should be remembered that deep delaminations or delaminations that contain only minute separation may not always sound drummy, or hollow. The presence of such delaminations can be detected by placing a hand close to the location of hammer blows or by closely observing sand particles on the surface close to the hammer blows. If the hand feels vibration in the concrete, or if the sand particles are seen to bounce however slightly due to the hammer blows, the concrete is delaminated.

An indication of the strength of concrete can also be determined by hammer blows. High strength concrete develops a distinct ring from a hammer blow and the hammer rebounds smartly. Low strength concrete resounds with a dull thud and little rebound of the hammer. More detailed information can be obtained by using commercially available rebound hammers, such as the Schmidt Rebound Hammer.

Cores taken from the damaged areas can be used to detect subsurface deterioration, to determine strength properties through laboratory testing, and to determine petrography. Petrographic examination of concrete obtained by coring can also be very useful in determining most causes of deterioration.

Figure 4-17 Gel resulting from alkali-aggregate reaction causes expansion and tension cracks in a concrete core.

There are a number of nondestructive testing methods that can be used to evaluate the extent of damage (Poston et al., 1995). The above-mentioned Schmidt Rebound Hammer is perhaps the cheapest and simplest to use. Ultrasonic pulse velocity and acoustic pulse echo devices measure the time required for an electronically generated sound wave to either travel through a concrete section or to travel to the far side of a concrete section and rebound. Damaged or low quality concrete deflects or attenuates such sound waves and can be detected by comparison of the resulting travel time with that of sound concrete. Acoustic emission devices detect the elastic waves that are generated when materials ate stressed or strained beyond their elastic limits. With such devices, it is possible to "hear" the impulses from development of microcracks in overly stressed concrete. Acoustic emission equipment has been used to "hear" the occurrence of prestressing strand failure in large diameter prestressed concrete pipe.

With computer assistance, several acoustic emission devices have been used not only to detect the occurrence of strand failure(s), but through triangulation, they were able to determine the location of the failure(s) (Travers, 1994).

The areas of deteriorated or damaged concrete discovered by these methods should be mapped or marked on drawings of the affected structure to provide information needed in subsequent calculations of the area and volume of concrete to be repaired and for preparation of repair specifications. Even though care is taken in these investigations, it is common to find during preparation of the concrete for repair that the actual area and

volume of deteriorated concrete exceeds the original estimate. For this reason, it is usually a good idea to increase the computed quantity estimates by 15 to 25 percent to cover anticipated overruns.

3. Evaluate the Need to Repair

Not all damaged concrete requires immediate repair. Many factors need consideration before the decision to perform repairs can be made. Obviously, repair is required if the damage affects the safety or safe operation of the structure. Similarly, repairs should be performed if the deterioration has reached a state, or is progressing at a rate, such that future serviceability of the structure will be reduced. Most concrete damage, however, progresses slowly, and several options are usually available if the deterioration is detected early. With early detection, it may be possible to arrest the rate of deterioration using maintenance procedures. Even if repair is required, early detection of damage will allow orderly budgeting of funds to pay the costs of repair.

Figure 4-18 Spillway damage requiring repairs at some future date.

Some types of concrete deterioration can simply be ignored. Cracking due to drying shrinkage and freezing and thawing deterioration is common on the downstream face of many older western dams. These types of damage are unsightly, but repair can seldom be justified for other than cosmetic purposes. It should be anticipated that such repairs might be more unsightly and of lower durability than the existing concrete. Conversely, structural cracks due to foundation settlement and freezing and thawing deterioration to the walls or floor of a spillway will usually require repair, if not immediately, at some point in the future. Damage caused by absorptive aggregate popouts is common on bridge deck, canal, and dam concrete. Unless such concrete is exposed to high velocity waterflows, where the offsets caused by popouts can result in cavitation damage, repair can be ignored. Serious damage to a spillway should always be repaired. If the spillway, however, is constructed with a very thick slab and does not experience high velocity water flow, the repairs can be scheduled at some future date to allow an orderly process of budgeting

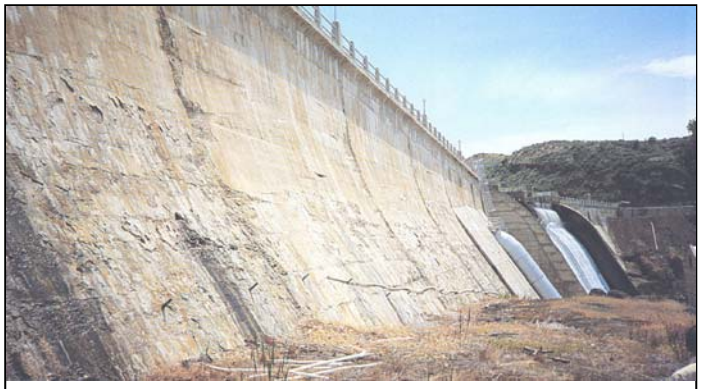

Figure 4-19 Freezing and thawing deterioration to the downstream face of this dam does not require repair for safe operation of the structure

to obtain the required funding. It should be noted, however, that proper maintenance might have eliminated the need to repair this spillway.

Selecting or scheduling the most optimum time to perform needed concrete repair should be part of the process of determining the need to repair. Except in emergencies, many irrigation structures cannot be removed from service during the water delivery season. The expense or loss of income involved with the inopportune release of reservoir water in order to lower water surface elevations to accomplish repairs may exceed the costs of the repairs by many times. If such costs exceed the value of the benefits expected from performing repairs, it might be prudent to postpone or even cancel performance of the repairs. Often damage on a spillway floor may initially be judged to be of a non-serious nature. Closer evaluation, however, may reveal that foundation material has been removed from a very large area beneath the floor slab and that immediate repair is required. If this spillway is operated without repair during periods of high spring runoff or flood flows, extensive additional damage might result. So, it is very important to make a proper evaluation of the need to make repairs, as well as when to make the repairs.

These first steps - determining the cause of damage, evaluating the extent of damage, and evaluating the need to repair - form the basis of what is known as a condition survey. If the damage is not extensive or if only a small part of a structure is involved, the condition survey could be simply a mental exercise. If major repair or rehabilitation is required, a detailed condition survey should be performed and documented. Such a survey will consist of review of the plans, specifications, and operating parameters for the structure; determination of concrete properties; and any additional field surveys, engineering studies, or structural analysis required to fully evaluate the present and desired conditions of the structure (American Concrete Institute, 1993). The final feature of a condition survey, completed only after the above-listed items have been completed, is a list of the recommended repair methods and materials.

4. Select the Repair Method

There is a tendency to attempt selection of repair methods/materials too early in the repair process. This should be guarded against. With insufficient information, it is very difficult to make proper, economical, and successful selections. Once the above three steps of the repair process have been completed, or upon completion of a detailed condition survey, the selection of proper repair methods and materials usually becomes very easy. These steps define the types of conditions the repair must resist, the available repair construction time period, and when repairs must be accomplished. This information, in combination with data on the volume and area of concrete to be repaired, will usually determine which of the 15 standard repair materials should be used (described briefly

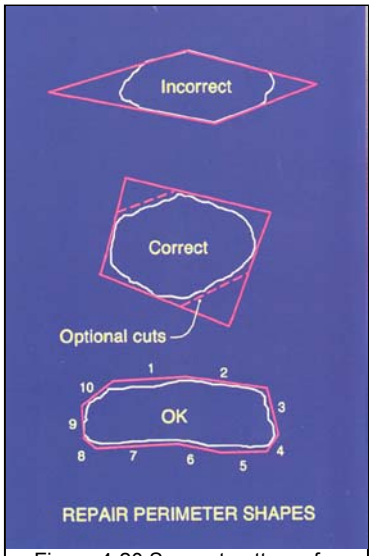

Figure 4-20 Saw cut patterns for the perimeters of repair areas.

below). Also, this information will determine when the standard repair materials cannot be expected to perform well and when nonstandard materials should be considered.

5. Prepare the Old Concrete for Repair

Preparation of the old concrete for application of the repair material is of primary importance in the accomplishment of durable repairs. The very best of repair materials will give unsatisfactory performance if applied to weakened or deteriorated old concrete. The repair material must able to bond to sound concrete. It is essential that all of the unsound or deteriorated concrete be removed before new repair materials are applied.

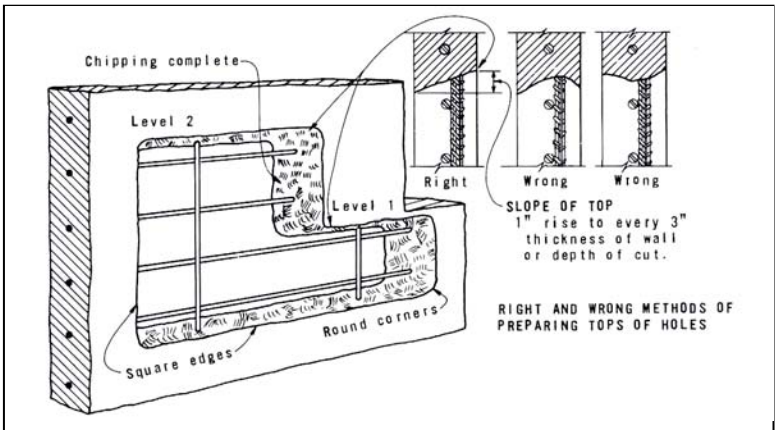

Figure 4-21 Preparation of a concrete deterioration that extends completely through a concrete wall.

The first step in preparing the old concrete for repair is to saw cut the perimeter of the repair area to a depth of 1 to 1.5 inches. The purpose of the saw cuts is to provide a retaining boundary against which the repair material can be compacted and consolidated. The perimeters of repairs are the locations most exposed to the effects of shrinkage, deterioration, and bond failure. Only poor compaction of repair material can be accomplished at feather edge perimeters. Such repair zones will fail quickly. For this reason feather edge perimeters to repair areas are not permitted by Reclamation's M-47 specifications. It is unnecessary to cut to the full depth of the repair, although to do so is not harmful. The saw cuts should be perpendicular to the concrete surface or tilted inward 2 to 3 degrees to provide retaining keyways that mechanically lock the repair material into the area. Tilting the saw inward more than 3 degrees may result in weak top corners in the old concrete and should be avoided. The saw cuts should never be beveled outward.

It is usually false economy to try to closely follow the shape of the repair area with a multitude of short saw cuts. The cost of sawing such a shape most likely will exceed the cost of increased repair area, and the resulting repair may be less attractive than those having simple rectangular shapes. Saw cuts should not meet in acute. It is very difficult to compact repair material into such sharp comers. The saw cut perimeters should have rounded comers whenever reasonable. Rounded corners cannot be cut with a circular concrete saw, but the cuts can be stopped short of the intersection and rounded using a jackhammer or bush hammer carefully held in a vertical orientation. It should be noted that intersections cannot be cut with a circular saw without the cuts extending outside the intersection. These cut extensions often serve as sources of cracking in some repair materials. Once the perimeters have been cut, the deteriorated concrete is removed using methods discussed in following paragraphs.

After the saw cut, all deteriorated or damaged concrete must be removed from the repair area to provide sound concrete for the repair material to bond to. It is always false economy to attempt to save time or money by shortchanging the removal of deteriorated concrete. Whenever possible, the first choice of concrete removal technique should be high pressure (8,000 to 15,000 pounds per square inch [psi]) hydroblasting or hydrodemolition. These techniques have the advantage of removing the unsound concrete while leaving high quality concrete in place. They have a further advantage in that they do not leave microfractured surfaces on the old concrete. Impact removal techniques, such as bushhammering, scrabbling, or jackhammering, can leave surfaces containing a multitude of microfractures which seriously reduce the bond of the repair material to the existing concrete. Subsequent removal of the microfractured surface by hydroblasting, shot blasting, or by wet or dry sandblasting should be performed if impact removal techniques are used. A disadvantage of the high pressure water blasting techniques is that the waste water and debris must be handled in an environmentally acceptable manner as prescribed by local regulations.

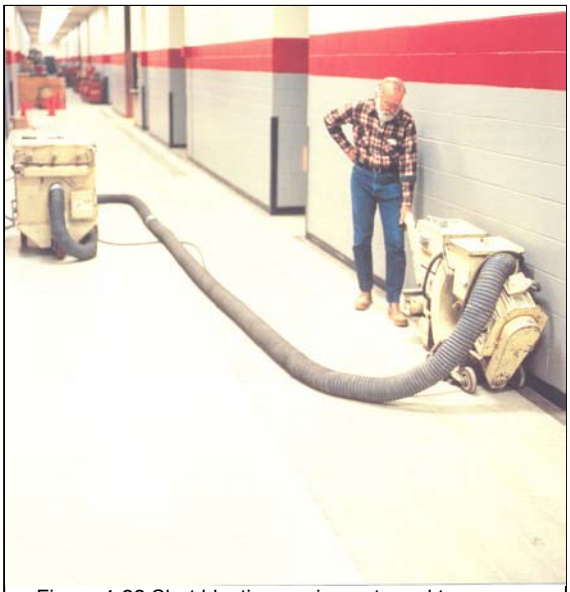

Figure 4-22 Shot blasting equipment used to remove shallow concrete deterioration.

Impact concrete removal techniques, such as jackhammering for large jobs and bushhammering for smaller areas, have been used for many years. These removal procedures are quick and economical, but it should be kept in mind that the costs of subsequent removal of the microfractured surfaces resulting from these techniques must be included when comparing the costs of these techniques to the costs of high pressure water blasting. The maximum size of jackhammers should usually be limited to 60 pounds. The larger jackhammers remove concrete at a high rate but are more likely to damage surrounding sound concrete. The larger hammers can impact and loosen the bond of concrete to reinforcing steel for quite some distance away from the point of impact. Pointed hammer bits, which are more likely to break the concrete cleanly rather than to pulverize it, should be used to reduce the occurrence of surface microfracturing.

Shallow surface deterioration (usually less than 1/2 inch deep) is best removed with shot blasting or dry or wet sandblasting. Shot blasting equipment is highly efficient and usually includes some type of vacuum pickup of the resulting dust and debris. The use of such equipment is much more environmentally acceptable than dry sand blasting. The need for removal of such shallow depths of deteriorated concrete is seldom encountered in concrete repairs other than for removal of microfractured surfaces or for cosmetic surface cleaning. Shallow deterioration to concrete surfaces can also be removed with tools known as scrabblers. These tools usually have multiple bits which pound and pulverize the concrete surfaces in the removal process. Their use greatly

multiplies the microfractures in the remaining concrete surfaces. Extensive high pressure water, sand, or shot blasting efforts are then needed to remove the resulting damaged surfaces. Such efforts are seldom attained under field conditions. For this reason, Reclamation's M-47 specifications prohibit use of scrabblers for concrete removal.

Figure 4-23 Multiple bits on the head of a scrabbler pound and Pulverize the concrete surface during the removal process.

Reinforcing steel exposed during concrete removal requires special treatment. As a minimum, all scale, rust, corrosion, and bonded concrete must be removed by wire brushing or high pressure water or sand blasting. It is not necessary to clean the steel to white metal condition, just to remove all the loose or poorly bonded debris that would affect bond between the repair material and the reinforcing steel. If corrosion has reduced the cross section of the steel to less than 75 percent of its original diameter, the affected bars should be removed and replaced in accordance with section 12.14 of American Concrete Institute (ACI) 318 (ACI, 1992). Steel exposed more than one-third of its perimeter circumference should be sufficiently exposed to provide a 1-inch minimum clearance between the steel and the concrete.

After the repair area has been prepared, it must be maintained in a clean condition and protected from damage until the repair materials can be placed and cured. In hot climates, this might involve providing shade to keep the concrete cool, thereby reducing rapid hydration or hardening. If winter conditions exist, steps need to be taken to provide sufficient insulation and/or heat to prevent the repair area from being covered with snow, ice, or snowmelt water. It should be remembered that repair activities can also contaminate or damage a properly prepared site. Workmen placing repair materials in one area of a repair often track mud, debris, cement dust, or concrete into an adjacent repair area. Once deposited on a prepared surface, this material will serve as a bond breaker if not cleaned up before the new repair material is placed. Repair contractors should be required to repeat preparation if a repair area is allowed to become damaged or contaminated. The prepared concrete should be kept wet or dry, depending upon the repair material to be used. Surfaces that will receive polymer concrete or epoxy-bonded materials should be kept as dry as possible. Some epoxies will bond to wet concrete, but they always bond better to dry concrete. Surfaces that will be repaired with cementitious material should be in a saturated surface dry (SSD) condition immediately prior to material application. This condition is achieved by soaking the surfaces with water for 2 to 24 hours just before repair application. Immediately before material application, the repair surfaces should be blown free of water, using compressed air. The SSD condition prevents the old concrete from absorbing mix water from the repair material and promotes development of adequate bond strength in the repair material. The presence of free water on the repair surfaces during application of the repair material must be avoided whenever practicable.

6. Apply the Repair Method

There are 15 different standard concrete repair methods/materials in Reclamation's M-47 specification. Each of these materials has uniquely different requirements for successful application. These requirements and application procedures are briefly discussed below, and are discussed at length in Reclamation's "Guide to Concrete Repair."

7. Cure the Repair Properly

All of the standard repair materials, with the exception of some of the resinous systems, require proper curing procedures. Curing is usually the final step of the repair process, followed only by cleanup and demobilization, and it is somewhat common to find that the curing step has been shortened, performed haphazardly, or eliminated entirely as a result of rushing to leave the job or for the sake of perceived economies. It should be understood that proper curing does not represent unnecessary costs. Rather, it represents a sound investment in long-term insurance. Inadequate or improper curing can result in significant loss of money. At best, improper curing will reduce the service life of the repairs. More likely, inadequate or improper curing will result in the necessity to remove and replace the repairs. The costs of the original repair are, thus, completely lost, and the costs of the replacement repair will be greater because the replacement repairs will be larger and must include the costs of removal of the failed repair material.

Standard Methods of Concrete Repair

The Bureau of Reclamation's 15 proven methods of repairing concrete are briefly described below. Their "Guide to Concrete Repair" (Sections 24 through 38) contains detailed discussions of each of the proven repair methods. Construction specifications for these methods/materials of repair are contained in the latest revision of Reclamation's Standard Specifications for the Repair of Concrete, M-47, Appendix A. It is recommended that the provisions of these specifications be closely followed during repair of concrete. It should be recognized, however, that these "standard" methods and specifications cannot apply to unusual or nonstandard concrete repair situations. Assistance with unusual or special repair problems can readily be obtained by contacting personnel of Reclamation's Materials Engineering and Research Laboratories, Code 0-8180.

1. Surface Grinding

Surface grinding can be used to repair some bulges, offsets, and other irregularities that exceed the desired surface tolerances. Excessive surface grinding, however, may result in weakening of the concrete surface, exposure of easily removed aggregate particles, or unsightly appearance. For these reasons, surface grinding should be performed subject to the following limitations:

- Grinding of surfaces subject to cavitation erosion (hydraulic surfaces subject to

flow velocities exceeding 40 feet per second) should be limited in depth so that no aggregate particles more than 1/16 inch in cross section are exposed at the finished surface.

- Grinding of surfaces exposed to public view should be limited in depth so that no aggregate particles more than 1/4 inch in cross section are exposed at the finished surface.
- In no event should surface grinding result in exposure of aggregate of more than one-half the diameter of the maximum size aggregate.

Where surface grinding has caused or will cause exposure of aggregate particles greater than the acceptable limits, the concrete must then be repaired by excavating and replacing the concrete.

2. Portland Cement Mortar

Portland cement mortar may be used for repairing defects on surfaces not prominently exposed, where the defects are too wide for dry pack filling or where the defects are too shallow for concrete filling and no deeper than the far side of the reinforcement that is nearest the surface. Repairs may be made either by use of shotcrete or by hand application methods. Replacement mortar can be used to make shallow, small size repairs to new or green concrete, provided that the repairs are performed within 24 hours of removing the concrete forms.

Figure 4-24 A Portland cement mortar patch seldom matches the color of the original concrete unless special efforts are taken to blend white cement with normal Portland cement.

Accomplishing successful mortar repairs to old concrete without the use of a bonding resin is unlikely or extremely difficult. Evaporative loss of water from the surface of the repair mortar, combined with capillary water loss to the old concrete, results in unhydrated or poorly hydrated cement in the mortar. Additionally, repair mortar bond strength development proceeds at a slower rate than compressive strength development. This causes workers to mistakenly abandon curing procedures prematurely, when the mortar "seems strong." Once the mortar dries, bond strength development stops, and bond failure of the mortar patch results. For these reasons, using cement mortar without a resin bond coat to repair old concrete is discouraged.

A portland cement mortar patch is usually darker than the surrounding concrete unless precautions are taken to match colors. A leaner mix will usually produce a lighter color patch. Also, white cement can be used to produce a patch that will blend with the surrounding concrete. The quantity of white cement to use must be determined by trial.

3. Dry Pack and Epoxy-Bonded Dry Pack

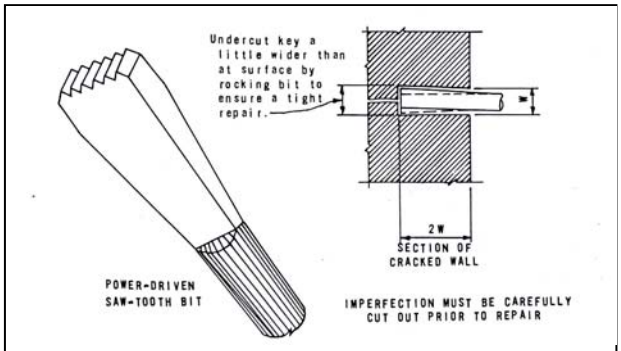

Figure 4-25 Saw-tooth bit used to cut slot for dry packing.

Dry pack is a combination of portland cement and sand passing a No. 16 sieve mixed with just enough water to hydrate the cement. Dry pack should be used for filling holes having a depth equal to, or greater than, the least surface dimension of the repair area; for cone bolt, she bolt, core holes, and grout-insert holes; for holes left by the removal of form ties; and for narrow slots cut for repair of cracks. Dry pack should not be used for relatively shallow depressions where lateral restraint cannot be obtained, for filling behind reinforcement, or for filling holes that extend completely through a concrete section.

For the dry pack method of concrete repair, holes should be sharp and square at the surface edges, but corners within the holes should be rounded, especially when water tightness is required. The interior surfaces of holes left by cone bolts and she bolts should be roughened to develop an effective bond; this can be done with a rough stub of 7/8-inch steel-wire rope, a notched tapered reamer, or a star drill. Other holes should be undercut slightly in several places around the perimeter. Holes for dry pack should have a minimum depth of 1 inch.

4. Preplaced Aggregate Concrete

Figure 4-26 The downstream face of Barker Dam, near Boulder, Colorado, was resurfaced with prepacked aggregate.

Preplaced aggregate concrete is an excellent repair material that has not been used much in recent years. Preplaced aggregate concrete is made by injecting portland cement grout, with or without sand, into the voids of a formed, compacted mass of clean, graded, coarse aggregate. The preplaced aggregated is washed and screened to remove fines before placing into the forms. As the grout is injected or pumped into the forms, it displaces any included air or water and fills the voids around the aggregate, thus creating a dense concrete having a high aggregate content.

Because the coarse aggregate has point contact prior to grout injection, preplaced aggregate concrete undergoes very little settlement, curing, or drying shrinkage during hydration. Drying shrinkage of prep laced aggregate concrete containing 1-1/2 inch maximum size aggregate is about 200 to 400 millionths, while conventional concrete

drying shrinkage containing the same size maximum aggregate is about 400 to 600 millionths.

Another advantage of preplaced aggregate concrete is the ease with which it can be placed in certain situations where placement of conventional concrete would be extremely difficult or impossible. Preplaced aggregate concrete is especially useful in underwater repair construction. It has been used in a variety of large concrete and masonry repairs, including bridge piers and the resurfacing of dams. It has been used to construct atomic reactor shielding and plugs for outlet works and tunnels in mine workings, and it has been used to embed penstocks and turbine scrollcases (American Concrete Institute, 1992).

Although preplaced aggregated is adaptable to many special repair applications, it is essential that the work be undertaken by well qualified personnel who are willing to follow exactly the construction procedures required for this repair material. Form work for preplaced aggregate concrete requires special attention to prevent grout loss. The construction of forms should be with workmanship better than that normally encountered with conventional concrete. Leaking forms can cause significant problems and should, by careful construction, be avoided whenever possible. The injected grout is more flowable than plastic concrete and takes slightly longer to set. Forms, therefore, must be constructed to take more lateral pressure than would be necessary with conventional concrete. Form bolts should fit tightly through the sheathing, and all possible points of grout leakage should be caulked.

5. Shotcrete

Shotcrete is defined as "mortar or concrete pneumatically projected at high speed onto a surface" (American Concrete Institute, 1990). There are two basic types of shotcrete: dry mix and wet mix. In dry mix shotcrete, the dry cement, sand, and coarse aggregate, if used, are premixed with only sufficient water to reduce dusting. This mixture is then forced through the delivery line to the nozzle by compressed air. At the nozzle, sufficient water is added to the moving stream to meet the requirements of cement hydration. For wet mix shotcrete, the cement, sand, and coarse aggregate are first conventionally mixed with water, and the resulting concrete is then pumped to the nozzle where compressed air propels the wet mixture onto the desired surface. The two types of shotcrete produce mixes with different water contents and different application characteristics as a result of the distinctly different mixing processes. Dry mix shotcrete suffers high dust generation and rebound losses varying from about 15

Figure 4-27 Wet mix shotcrete is propelled by compressed air.

percent to up to 50 percent. Wet mix shotcrete must contain enough water to permit pumping through the delivery line. Wet mix shotcrete, as a result, may experience significantly more cracking problems due to the excess water and drying shrinkage. Advances in the development of the high range water reducing admixtures, pumping aids, and concrete pumping equipment since about 1960 have greatly reduced these problems, and wet mix shotcrete is now being used more frequently in repair construction.

Figure 4-28 Dry mix shotcrete equipment showing the nozzle and water injection ring.

Shotcrete is a very versatile construction material that can be readily placed and successfully used for a variety of concrete repair applications. The necessity of form work can be eliminated in many repair applications by use of shotcrete. Shotcrete has been used to repair canal and spillway linings and walls, the faces of dams, tunnel linings, highway bridges and tunnels, deteriorating natural rock walls and earthen slopes, and to thicken and strengthen existing concrete structures. Provided the proper materials, equipment, and procedures are employed, such shotcrete repairs can be accomplished quickly and economically. This apparent ease of application should not cause one to believe that shotcrete repair is a simple procedure or one that can be haphazardly or improperly applied with impunity. The following two paragraphs contain a very descriptive warning of such practices:

"Regardless of the considerable advantages of the shotcrete process and its ability to provide finished work of the highest quality, a large amount of poor and sometimes unacceptable work has unfortunately occurred in the past, with the result that many design and construction professionals are hesitant to employ the process. As with all construction methods, failure to employ proper procedures will result in inferior work. In the case of shotcrete the deficiencies can be severe, requiring complete removal and replacement. Deficiencies in shotcrete applications usually fall into one of four categories: failure to bond to the receiving substrate, delamination at construction joints or faces of the application layers, incomplete filling of the material behind the reinforcing, and embedment of rebound or other unsatisfactory material" (Warner, 1995).

Each of the above-listed deficiencies has occurred on Reclamation repair projects. Perhaps more important with shotcrete than with any other standard concrete repair method, if highly qualified, well trained, and competent workmen cannot be employed, it is advisable to consider using some other repair procedure. The quality of shotcrete closely depends upon the skill and experience of one person, the nozzleman. Dam owners should use only formally certified nozzlemen for shotcrete repairs. The on-the-job training necessary to develop the experience and skill needed to achieve such certification for repair work should occur prior to the nozzleman's arrival at the job.

6. Replacement Concrete

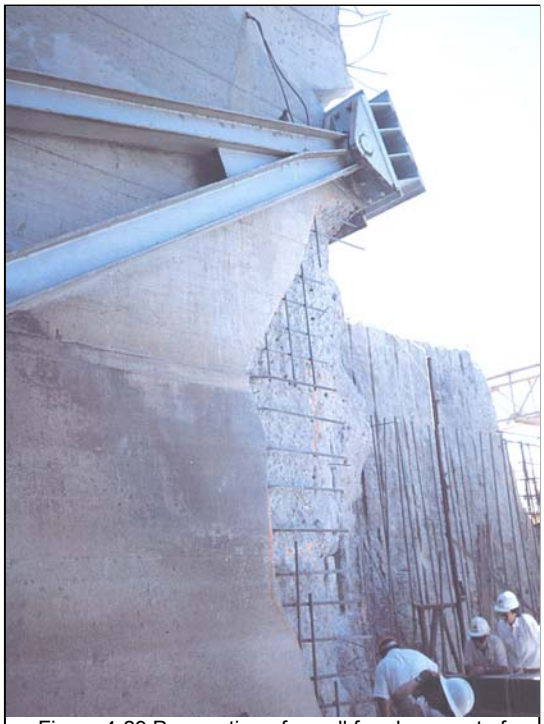
Figure 4-29 Preparation of a wall for placement of replacement concrete repairs.

Concrete repairs made by bonding new concrete to repair areas without use of an epoxy bonding agent or mortar grout applied on the prepared surface should be made when the area exceeds 1 square foot, has a depth greater than 6 inches, and when the repair will be of appreciable continuous area. Replacement concrete repairs should also be used for:

- Holes extending entirely through concrete sections
- Holes in which no reinforcement is encountered, or in which the depth extends 1 inch below or behind the backside of the reinforcing steel and which are greater in area than 1 square foot and deeper than 4 inches, except where epoxy- bonded concrete replacement is required or permitted as an alternative to concrete replacement
- Holes in reinforced concrete greater than one-half square foot and extending beyond reinforcement

Replacement concrete is the most common concrete repair material and will meet the needs of a majority of all concrete repairs. Replacement concrete repairs are made by bonding new concrete to the repair areas without the use of a bonding agent or portland cement grout. The combination of a deep repair and good curing practices ensures adequate hydration water will remain at the bonding surface zone for at least 28 days, allowing the cement hydration process to develop good bond. Because the defective concrete is being replaced with high quality concrete very similar to the surrounding concrete, the repair is compatible in thermal expansion and in other physical and chemical properties with the old concrete. For this reason, in many cases, the best repair method is the use of replacement concrete. Only when an unusual increase in durability is needed, or when placing conditions or dimensions dictate otherwise, should other materials be considered.

Figure 4-30 A gas-fired forced air heater is being used to heat concrete prior to application of epoxy mortar.

7. Epoxy-Bonded Epoxy Mortar

Epoxy-bonded epoxy mortar should be used where the depth of repair is less than 1-1/2 inches and the exposure conditions are such that relatively constant temperatures can be expected. Epoxy

mortars have thermal coefficients of expansion that may be significantly different from conventional concrete. If such mortars are used under conditions of wide and frequent temperature fluctuations, they will cause failure just below the bond surface in the base concrete. For this reason, epoxy mortars should not be used under conditions of frequent or large temperature variations.

The application of epoxy mortar to repair areas of concrete deterioration caused by corroding reinforcing steel is also not recommended. The epoxy bond coat and epoxy mortar create zones of electrical potential that are different from the electrical potential in the surrounding concrete. This difference in potential can result in the formation of a galvanic corrosion cell with accelerated corrosion at the repair perimeters.

Figure 4-31 Epoxy mortar is consolidated and compacted by hand tamping.

Epoxy mortar is properly used to make thin repairs (l/2-inch to 1-1/2-inch thickness) to concrete under relatively constant temperature exposure conditions. Such applications could include tunnel linings, indoor or interior concrete, the underside of concrete structures such as bridge decks, continuously inundated concrete such as stilling basin floors, canal linings below water line, or concrete pipe. Applications to concrete exposed to the daily temperature fluctuations caused by exposure to direct sunlight are not appropriate for epoxy mortar repair.

Figure 4-32 Applying the steel trowel finish required by epoxy mortar repairs.

Properly applied epoxy mortar repairs have a long history of successful performance on repaired concrete when used under appropriate conditions. A 1991 inspection of the epoxy mortar repairs made at Yellowtail Dam in 1968 showed that less than 2 percent of the repairs had suffered failure in over 20 years of service. This is considered outstanding performance for a repair material.

8. Epoxy-Bonded Replacement Concrete

Epoxy-bonded concrete is used for repairs to concrete that are between 1.5 and 6 inches thick. Shallow replacement concrete repairs, less than 6 inches thick, are subject to poor curing conditions as a result of moisture loss to evaporation and to capillary absorption by the old base concrete. Such repairs seldom

Figure 4-33 The placement techniques for epoxy-bonded concrete are essentially the same as for conventional concrete.

develop acceptable bond strength to the old concrete. The epoxy bonding resin is used to ensure a strong, durable bond between the old concrete and the replacement concrete.

As with epoxy-bonded epoxy mortar, care should be exercised if epoxy-bonded concrete is to be used to repair shallow deterioration resulting from corroding reinforcement. The epoxy bond coat may create electrical potentials sufficiently different from potentials in the surrounding concrete to result in accelerated corrosion at repair perimeters.

9. Polymer Concrete

Polymer concrete (PC) is a concrete system composed of a polymeric resin binder and fine and coarse aggregate. Water is not used to mix polymer concrete. Instead, the liquid resin, known as a monomer, is caused to cure or harden by a chemical reaction known as polymerization. During polymerization, the monomer molecules are chemically linked and cross linked to form a hard, glassy plastic known as a polymer. The polymers used in PC are formulated to provide the special properties needed for high performance repair materials.

These systems can be cured very quickly and are most useful in performing repairs to structures that must be immediately returned to service. As an example, PC is commonly used to repair potholes in concrete highway bridge decks, thereby eliminating the necessity of long and costly road closures or detours. It is also useful for repairs to structures, such as tunnel linings, that can be maintained in a dry condition for only short periods of time and for cold weather repairs down to temperatures as low as 15 degrees Fahrenheit. PC repairs can be accomplished in thicknesses varying from about 1/2 inch to several feet if appropriate precautions are taken.

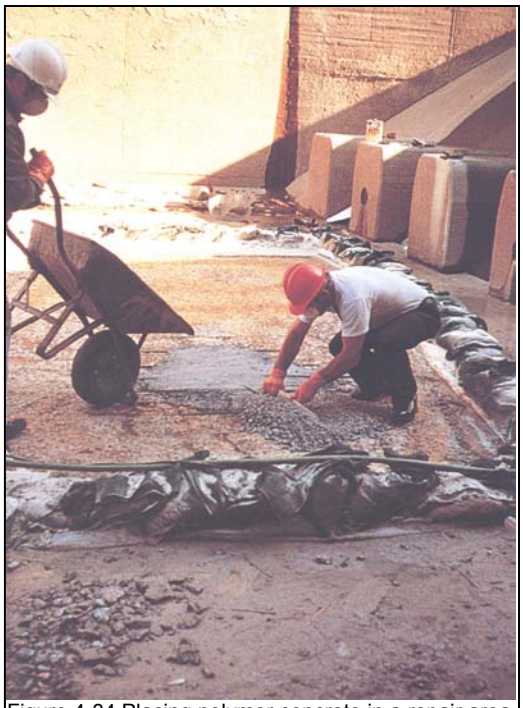

Figure 4-34 Placing polymer concrete in a repair area. Sandbags and polyethylene sheeting were used to prevent water from entering the repair area.

PC develops strength and durability properties very quickly due to its rapid polymerization characteristics and is useful where rapid repairs to concrete are required. PC can be mixed, placed, polymerized, and put into service in only a matter of hours. PC also develops enhanced durability properties. This feature makes it useful as protective overlays on conventional concrete exposed to corrosive or severe environments. Since PC does not contain mix water, it can be used at much lower temperatures (down to 15 degrees Fahrenheit) than portland cement concrete.

Most polymer concretes experience some volumetric shrinkage during polymerization and also have problems associated with the coefficient of thermal expansion similar to those experienced with epoxy mortars. These problems with PC, though generally less severe than similar problems with epoxy mortar, can limit the materials use on concrete exposed to wide temperature variations. Potential users of PC should be aware of these problems. Reclamation's Materials Engineering and Research Laboratory at Denver, 0-8180, can provide guidance and recommendations for the application of these very useful materials.

10. Thin Polymer Concrete Overlay

Figure 4-35 Small stinger vibrators can be used to consolidate shallow depths of polymer concrete.

The thin PC overlay is a hard, glassy concrete coating, 25 to 50 mils thick, consisting of a vinyl ester resin system, silica flour filler, and appropriate coloring pigments. This membrane-forming overlay partially penetrates the immediate top surface of the concrete and provides very good protection to concrete exposed to adverse chemical or weathering conditions. It can also provide cosmetic treatment to concrete exposed to public view. The normal three-coat application of this material (one primer coat plus two filler coats) should result in a total overlay thickness of about 50 mils.

Figure 4-36 Polymer concrete must be protected from water and not disturbed during the 1- to 2-hour curing period. No other curing procedures are required unless ambient temperatures are very low.

The overlay is applied to protect the concrete from water penetration and resulting freeze-thaw damage; to protect the concrete from chemical corrosive elements such as acids, chlorides, or sulfates; and/ or to improve the cosmetic appearance of the concrete. The overlay provides complete opaque coverage of the concrete surface and flows into and seals narrow cracks in the surface. There is currently no known commercial manufacturer of the thin polymer concrete overlay. Contractors or users of the overlay system can have the material prepared by custom resin blenders or can blend and mix the material themselves using the formulas listed in the "Guide to Concrete Repair."

11. Resin Injection

Resin injection is used to repair concrete that is cracked or delaminated and to seal cracks in concrete to water leakage. Two basic types of resin and injection techniques are used to repair concrete.

1. Epoxy Resins

Epoxy resins cure to form solids with high strength and relatively high moduli of elasticity. These materials bond readily to concrete and are capable, when properly applied, of restoring the original structural strength to cracked concrete. The high modulus of elasticity causes epoxy resin systems to be unsuitable for rebonding cracked concrete that will undergo subsequent movement. Epoxy resin has been used to seal cracks in concrete to water flow. The epoxies, however, do not cure very quickly, particularly at low temperatures, and using them to stop large flows of water may not be practical. Cracks to be injected with epoxy resins should be between 0.005 inch and 0.25 inch in width. It is difficult or impossible to inject resin into cracks less than 0.005 inch in width, while it is very difficult to retain injected epoxy resin in cracks greater than 0.25 inch in width, although high viscosity epoxies have been used with some success. Epoxy resins cure to form relatively brittle materials with bond strengths exceeding the shear or tensile strength of the concrete. If these materials are used to rebond cracked concrete that is subsequently exposed to loads exceeding the tensile or shear strength of the concrete, it should be expected that the cracks will recur adjacent to the epoxy bond line. In other words, epoxy resin should not be used to rebond "working" cracks.

Figure 4-37 Commercial polyurethane injection pump.

Epoxy resins will bond with varying degrees of success to wet concrete, and there are a number of special techniques that have been developed and used to rebond and seal water leaking cracks with epoxy resins. These special techniques and procedures are highly technical and, in most cases, are proprietary in nature. They may have application on repair projects, but only after a thorough analysis has been performed to ensure that the more standard repair procedures will not be successful or cost effective.

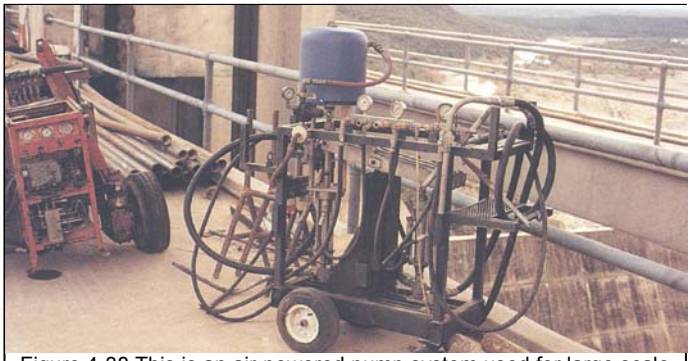

Figure 4-38 This is an air-powered pump system used for large scale polyurethane resin injection.

2. Polyurethane Resins

Polyurethane resins are used to seal and eliminate or reduce water leakage from concrete cracks and joints. They can also be injected into cracks that experience some small degree of movement. Such systems, with the exception of the two-part solid polyurethanes, have relatively low strengths and should not be used to structurally

rebond cracked concrete. Cracks to be injected with polyurethane resin should not be less than 0.005 inch in width. No upper limit on crack width has been established for the polyurethane resins at the time this is being written.

Polyurethane resins are available with substantial variation in their physical properties. Some of the polyurethanes cure into flexible foams. Other polyurethane systems cure to semi-flexible, high density solids that can be used to rebond concrete cracks subject to movement. Most of the foaming polyurethane resins require some form of water to initiate the curing reaction and are, thus, a natural selection for use in repairing concrete exposed to water or in wet environments. At the time this is written, there are no standard specifications for polyurethane resins equivalent to the Standard Specification for Epoxy-Resin-Base Bonding Systems for Concrete, ASTM Designation C-881. This current lack of standards, combined with. the wide variations possible in polyurethane physical properties, creates the necessity that great care be exercised in selecting these resins for concrete repair. "Cookbook" type application of these resins will not be successful. The Materials Engineering and Research Laboratory (0-8180) of the Denver Technical Services Center is currently testing and evaluating these very useful resin systems. They will provide advice and guidance for field applications if requested.

Because of the relatively high cost to repair cracks using resin injection, this method is not normally used to repair shallow, drying shrinkage, or pattern cracking.

12. High Molecular Weight Methacrylic Sealing Compound

Concrete sealing compounds are applied to cured, dry concrete as a maintenance procedure to reduce or prevent penetration of water, aggressive solutions, or gaseous media and the associated deterioration, such as freeze-thaw, carbonation, or sulfate damage. These materials replace the linseed oil based treatment, which was generally misunderstood and is no longer recommended for use on concrete.

A variety of different membrane forming (similar to paints or coatings) and surface penetrating chemicals are manufactured and sold as sealing compounds for concrete surfaces. Some of these materials provide very good protection to the concrete for discrete periods of time. Other commercially available sealing materials, however, may be little more than mineral spirits and linseed oil. Such systems will, at best, do little harm to the concrete. Their application may, however, prevent subsequent treatment with the sealing compounds that have been proven effective. For this reason, only productucts that have proven effective in Reclamation laboratory tests and field applications should be used on repair projects. Reclamations Materials Engineering and Research Laboratory, D-8180, maintains a current listing of concrete sealing compounds that have been found effective for Reclamation applications.

One type of sealing; compound that has proven effective in Reclamation laboratory tests and field applications and has been designated a Standard Repair Material is known as a high molecular weight methacrylic monomer system. This sealing compound is composed of a methacrylic monomer and appropriate polymerization

"catalysts" very similar to the monomer system used in polymer concrete. It is a water thin, amber colored liquid that is easily spread over horizontal and vertical concrete surfaces with brooms or squeegees.

The liquid penetrates the concrete surface to a depth of about 1/16 inch but is most effective in penetrating and sealing cracks in the concrete surface. This sealer will act like a membrane forming system if excess monomer is applied or if two or more applications are made. The appearance of the concrete following application will be somewhat like a varnished or water wet surface and may be splotchy in areas of high and low absorption. Cured sealer left on the surface of the concrete will be deteriorated by solar radiation within 1 to 2 years and will disappear. The loss of this surface material is of no consequence since the objective of the application is to penetrate and seal cracks where the sealer is protected from solar radiation deterioration. The expected service life of properly applied methacrylic sealing compound under typical Western State climatic conditions is 10 to 15 years. Reapplication is then necessary.

13. Polymer Surface Impregnation

The polymer surface impregnation process was developed by the Bureau of Reclamation for the Federal Highway Administration to prevent chloride deicing salt penetration and subsequent corrosion of reinforcing steel in existing concrete highway bridge decks. The process has provided in excess of 20 years of highly successful protection to many highway bridge decks and was applied to the entire roadway surface over Reclamation's Grand Coulee Dam.

In this process, the concrete to be treated is first covered with a bed of sand and dried with heat to remove moisture from the zone to be impregnated. A low viscosity methyl methacrylic monomer system is applied to the sandbed under a heavy polyethylene sheet and allowed to soak into the concrete surface for about 6 hours. The polyethylene retards evaporation of the highly volatile monomer system, and the sand acts as a reservoir, retaining the monomer system on the concrete until it soaks into the surface. The polyethylene covered sand and treated surface is then reheated to initiate insitu polymerization of the methyl methacrylate monomer system within the structure of the concrete. Concrete so treated will be virtually impervious to water absorption and freeze-thaw deterioration.

Figure 4-39 This workman is hand screeding a small silica fume concrete repair.

Detailed materials and performance specifications for the polymer surface impregnation process are contained in “Guide to Concrete Repair.” Users considering application of this procedure should carefully appraise the current costs and associated safety issues. The costs of energy to properly dry and reheat areas of concrete may preclude large scale use

of this very effective preventative maintenance process.

14. Silica Fume Concrete

Silica fume concrete is conventional portland cement concrete containing admixtures of silica fume. Silica fume is a finely divided powder byproduct resulting from the use of electric arc furnaces. When mixed with portland cement concrete, silica fume acts as a "super pozzolan." Concrete containing 5 to 15 percent silica fume by mass of cement commonly can develop 10,000-psi to l5,000-psi compressive strengths, reduced tendency to segregate, very low permeabilities, and enhanced freeze-thaw and abrasion-erosion resistance. Current use of silica fume is primarily for the purpose of enhancing or improving concrete durability with less emphasis on strength improvement.

Silica fume concrete is the repair material of choice for applications requiring enhanced abrasion-erosion resistance and/ or reduced permeability. Silica fume concrete requires a very thorough curing procedure, however, and should not be used unless such a procedure can be accomplished. Otherwise, this repair material is used in accordance with the provisions for conventional replacement concrete.

The silica fume admixture can be obtained in at least three forms for use in concrete:

(1) Silica fume powder
(2) Densified silica fume powder with or without a high range water reducing admixture (HRWRA) and other dry admixtures
(3) Silica fume-water slurry with HRWRA and other admixtures

The dry silica fume powder is difficult to use because of its extremely small particle size. The fine powder drifts and spreads in any draft or air movement and can create silicate respiratory problems to workers. The water slurry form is easy to use, creates no dust problems, but does involve an additional mixing step as the slurry settles during storage and shipment and must be stirred and remixed prior to use. The water in the slurry must be accounted during mix design. Transportation costs of the slurry must also be considered. The densified powder form is currently the most convenient form to ship and use. In this form, the silica fume powder is compacted and densified and does not produce nearly the quantity of dust that occurs with the powdered form. It is a dry material and does not create additional shipping costs. Because it has been compacted into clumps, it should be expected that additional time would be required during mixing to fully break up and disperse the densified silica fume admixture in the concrete mixture.

Because of these various forms, it is essential that trial mixtures be prepared and tested during mix design to ensure development of the desired concrete properties.

The addition of silica fume admixture to concrete will increase the water requirement due to the high surface area of the very fine silica fume particles. The use of HRWRA is

thus necessary to obtain the maximum strength and durability with silica fume concrete. Provisions should be made during proportioning, however, to accommodate the slump gain commonly associated with concrete containing HRWRA. Silica fume increases the cohesion or "stickiness" of the concrete and can result in workability and finishing problems for those inexperienced in the proper finishing techniques. It is of primary importance to place and finish silica fume quickly, before excessive mix water evaporation and stiffening occurs. The slump gain from the HRWRA commonly offsets some of the "stickiness" of silica fume concretes. Typical requirements include 4-6 percent entrained air in silica fume concrete. This addition of air entraining admixture also improves the workability of the concrete.

Special repair techniques are required for restoration of damaged or eroded surfaces of spillway or outlet works tunnel inverts and stilling basins. In addition to the usual forces of deterioration, such repairs often must withstand enormous dynamic and abrasive forces from fast-flowing water and sometimes from suspended solids. The enhanced abrasion-erosion resistance and high strength of silica fume concrete makes it the repair material of choice for these types of repair. It should be recognized, however, that the cause(s) of the original damage in such repairs must be mitigated if a permanent repair is to be accomplished.

Whenever practicable, low slump silica fume concrete should be used for these types of repair. Slump of the concrete should not exceed 2 inches for slabs that are horizontal or nearly horizontal and 3 inches for all other concrete. (This is 1 inch less slump than required in the M-47 specifications for conventional applications of silica fume concrete.) The net water-cementitious ratio (exclusive of water absorbed by the aggregates) should not exceed 0.35, by weight. An air-entraining agent should be used, and a high range water reducing admixture should be used. Set-retarding admixtures should be used only when the interval between mixing and placing is quite long.

15. Alkyl-Alkoxy Siloxane Sealing Compound

This sealing compound is effective in reducing water penetration into treated concrete, provided that the sealing compound contains in excess of 15-percent siloxane solids. These solids are suspended in a carrier such as alcohol or mineral spirits that evaporates from the concrete following application. Use of this type of sealing compound does not cause a change in the appearance of the treated concrete, except that the darkening normally associated with water wetting of concrete does not occur. It is common to see water bead on treated concrete surfaces. Siloxane sealing compounds will not provide protection to concrete that is completely inundated in water

Figure 4-40 A paint roller application of siloxane sealing compound to the downstream face on Nambe Falls Dam, near Sante Fe, New Mexico.

except for short periods. They should not be used under conditions that involve prolonged inundation such as occurs with stilling basins, canal floors, or spillway floors unless there are significantly long dry periods between inundations and it is acceptable to reapply the sealing compound following inundation. Siloxane sealing compound is best used to protect concrete from rain, snowmelt, and water splash zones.

These materials have a relatively limited service life, and reapplication should be scheduled about every 5 to 7 years for optimum protection. Application of these materials, however, proceeds very quickly on horizontal and vertical concrete surfaces. Two workmen can be expected to treat 10,000 to 15,000 square feet of horizontal surface in a day.

Nonstandard Methods of Repair

The standard concrete repair methods/materials discussed earlier will meet nearly all concrete repair needs. There will be occasions, however, resulting from unusual causes of damage and exposure conditions or special repair needs, when the standard repair methods may not meet the performance needs. In these infrequent instances, nonstandard repair methods may be required.

Repair materials are considered to be nonstandard if they have not been thoroughly tested and evaluated for Reclamation applications. The use of such materials involves a certain element of risk because the performance properties of these materials are unknown or not fully defined. The application of nonstandard materials can be justified only when it has been determined that no standard repair material will serve, and if all parties associated with or responsible for accomplishing the repairs are made to understand the risks and agree to accept the uncertainties and possible consequences.

An example of such a situation would be the need to repair concrete damage on the crest of a dam that is less than 1-1/2 inches deep. There is no standard repair material suitable for such shallow repairs when exposed to sunlight temperature variation conditions. (These conditions eliminate the use of epoxy mortars.) The current standard repair material for depths between 1-1/2 inches and 6 inches is epoxy-bonded replacement concrete. If the deterioration is not at least 1-1/2 inches deep, sufficient concrete must be removed to accomplish a 1-1/2- inch depth. If, for some reason, it was undesirable or impossible to remove the required depth of concrete, it might be appropriate to select one of the proprietary thin repair products. These materials have been only partially evaluated (Smoak and Husbands, 1996) and the long-term field performance has not yet been fully determined. In this example, the dam owner must be made aware of the risks of using an unproven repair material must be made known to them. The dam owner, with this knowledge, can then determine if the benefits of performing the shallower repairs would outweigh the uncertainties associated with unproven performance.

4.10 ACCESS ROADS

For a dam to be operated and maintained, there must be a safe means of access to it at all times. The road surface must be maintained to allow safe passage of automobiles and any required equipment for servicing the dam, in any weather conditions. Routine observations of any cut and fill slopes along the sides of the road should be made. If unstable conditions develop, professional help should be obtained and remedial measures initiated.

Figure 4-41 This dam has an access road that crosses the embankment; however lack of a durable road surface creates potential erosion problems and safety concerns.

Generally, a drainage ditch is required along roads in cuts to remove surface and subsurface drainage. This will prolong the life of the road and help reduce deterioration from rutting and freeze-thaw action.

Road surfacing should be repaired or replaced as necessary to maintain the required traffic loadings. In most cases, specialized contractors will be required to perform this maintenance.

4.11 MECHANICAL EQUIPMENT

Proper operation of a dam's outlet works is essential to the safe and satisfactory operation of a dam. Release of water from a dam is normally a frequent or ongoing function. However, on some reservoirs used for recreation, fish propagation, or other purposes that do not require continual release of water, an operable outlet provides the only means for the emergency lowering of the reservoir and is therefore, essential for the safety of the dam.

If routine inspection of the outlet works indicates the need for maintenance, the work should be completed as soon as access can be gained. Postponement of maintenance could cause damage to the installation, significantly reduce the useful life of the structure, and result in more extensive and more costly repairs when finally done. More importantly, failure to maintain an outlet system can lead directly to failure of the dam.

The simplest procedure to insure the smooth operation of outlet gates is to operate all gates through their full range at least once and preferably twice annually. Many gate manufacturers recommend operating gates as often as four times a year. Because operating gates under full reservoir pressure can result in large outlet discharges, gate testing should be scheduled during periods of low storage. If this cannot be done, they should be operated during periods of low stream flow. If large releases are expected, outlets should be tested only after coordinating releases with water administration

officials and notifying downstream residents and water users.

Operation of the gates minimizes the buildup of rust in the operating mechanism and therefore, the likelihood of seizure of the operating mechanism. During this procedure, the mechanical parts of the hoisting mechanism - including drive gears, bearings, and wear plates - should be checked for adverse or excessive wear, all bolts, including anchor bolts, should be checked for tightness, worn and corroded parts should be replaced, and mechanical and alignment adjustments should be made as necessary.

The way the gate actually operates should also be noted. Rough, noisy, or erratic movement could be the first signs of a developing problem. The cause of operational problems should be investigated and corrected immediately. Excessive force should be neither needed nor applied to either raise or lower a gate. Most manual hoisting mechanisms are designed to operate satisfactorily with a maximum force of 40 pounds on the operating handle or wheel. If 40 pounds force is exceeded, the operating stem may be bent and the gate become inoperable. Electric-motor operated floor stands should have torque limiting devices; limit switch settings should be checked to prevent operating stem damage. If excessive force seems to be needed, something may be binding the mechanical system. The application of excessive force may result in increased binding of the gate or damage to the outlet works. If there does seem to be undue resistance, the gate should be worked up and down repeatedly in short strokes until the binding ceases, and/or the cause of the problem should be investigated. Of course, the problem should be corrected as soon as possible to assure the continued operability of the gate.

If a gate does not properly seal when closed, debris may be lodged under or around the gate leaf or frame, or the stem is bent. The gate should be raised at least 2 to 3 inches to flush the debris, and the operator should then attempt to re-close the gate. This procedure should be repeated until proper sealing is achieved. However, if this problem or any other problem persists, a manufacturer’s representative or engineer experienced in gate design and operation should be consulted.

An outlet gate operating mechanism should always be well lubricated in accordance with manufacturer's specifications. Proper lubrication will not only reduce wear in the mechanism, but also protect it against adverse weather. Gates with oil-filled stems (i.e., stems encased in a larger surrounding pipe) should be checked semiannually to assure the proper oil level is maintained. If such mechanisms are neglected, water could enter the encasement pipe through the lower oil seal and could cause failure of the upper and/or lower seals which in turn could lead to the corrosion of both the gate stem and interior of the encasement pipe.

Depending on the type of gate operated, there may be vibration in the system and eventually fasteners will become loose and affect stem guide alignment. For satisfactory operation, a gate stem must be maintained in proper alignment with the gate and hoisting mechanism. Proper alignment and support is supplied by stem guides in sufficient number and properly spaced along the stem. Stem guides are

brackets or bearings through which a stem passes. They both prevent lateral movement of the stem and bending or buckling when a stem is subjected to compression as a gate is being closed. The alignment of a stem should be checked during routine inspections. Alignment may be checked by sighting along the length of the stem, or more accurately by dropping a plumb line from a point near the top of the stem to the other end. The stem should be checked in both an upstream/downstream direction as well as in a lateral direction to ensure straightness. While checking alignment, all gate stem guide anchors and adjusting bolts should be checked for tightness. A loose guide provides no support to the stem and could cause buckling of the stem at that point. If during normal inspection, the stem appears out of alignment, the cause should be repaired. The gate should be completely lowered and all tension or compression taken off the stem. Any misaligned stem guides should be loosened and made to move freely. The hoisting mechanism should then be operated to put tension on the stem, thereby straightening it, but the gate should not be opened. The affected guides should then be aligned and fastened so that the stem passes exactly through their centers.

The metal used in gate seats is usually brass, stainless steel, bronze, or other rust-resistant alloys. Older or smaller gates may not be fitted with seats, making them susceptible to rusting at the contact surfaces between the gate leaf and gate frame. Operation of gates should prevent excessive rust buildup or seizure. Many outlet gates are equipped with wedges that hold the gate leaf tightly against the gate frame as the gate is closed, thus causing a tight seal. Through years of use, gate seats may become worn, causing the gate to leak increasingly. If an installation has a wedge system, the leakage may be substantially reduced or eliminated by readjusting or replacing the wedges. Because adjustment of these gates is complicated, inexperienced personnel can cause extensive damage to a gate. Improper adjustment could cause premature seating of the gate, possible scoring of the gate seats, binding of the gate, gate vibration, leakage, uneven closing of the gate, or damage to wedges or gate guides. Thus, only experienced personnel should perform adjustments, and a gate supplier or manufacturer should be consulted to obtain names of people experienced in such work.

Ice can exert great force on and cause significant damage to an outlet gate leaf. Storage levels in a reservoir during winter should be low enough that ice cannot form behind a gate. To prevent ice damage, the winter water level should be significantly higher than the gate if storage is maintained through the winter or, if the reservoir is to remain empty over the winter months, the outlet should be left fully open. If operations call for the water level to move across the gate during the winter, a bubbler or other anti-icing system may be needed.

All exposed, bare ferrous metal on an outlet installation, whether submerged or exposed to air, will rust. To prevent corrosion, exposed ferrous metals must either be painted or heavily greased. If painted, the paint should be appropriate and applied following the paint manufacturer's directions. When areas are repainted, steps should be taken to assure that paint does not get on gate seats, gate wedges, or gate stems where the stems pass through the stem guides, or on other friction surfaces where paint could

cause binding. Heavy grease should be used on surfaces where binding can occur. Because rust is especially damaging to contact surfaces, existing rust should be removed before the periodic application of grease.

Electrical equipment is typically used at a dam to provide lighting, operate outlet gates, operate recording equipment, operate spillway gates, and operate other miscellaneous equipment. It is important that an electrical system be well maintained. Maintenance should include a thorough check of fuses, circuit breakers, and a test of the system to ensure that all parts are properly functioning. The electrical system should be free from moisture and dirt, and wiring should be checked for corrosion and mineral deposits. Any necessary repairs should be completed immediately, and records of the repair work should be kept. Stationary and portable generators used for auxiliary emergency power must also be maintained. This work includes changing oil, and checking batteries and antifreeze.

Figure 4-42 Tainter gates are used in this concrete spillway system.

Monitoring devices for the most part do not require routine maintenance. The main exceptions are the piezometers, weirs, and stakes (in staked areas). The weirs should be regularly checked and cleared of any debris. They should also be checked for loose boards or loose metal stripping, and repaired as necessary. Staked areas are particularly susceptible to vandalism. Stakes should be checked routinely and replaced immediately where needed. Piezometers should be maintained in an operable state at all times. Consult the recommendations of the manufacturer for guidelines on maintenance.

4.12 MONITORING REPAIRS

After repairs are completed on the dam or its appurtenant works, they should be monitored on a regular basis to insure that the repairs were effective. Monitoring should be performed frequently initially; the frequency can be reduced in time after the dam owner is “comfortable” with the results. Photographs and notes should be taken to help keep an accurate record.

4.13 RODENT CONTROL

Rodents such as the groundhog (woodchuck), muskrat, and beaver are attracted to

dams and reservoirs and can be quite dangerous to the structural integrity and proper performance of the embankment and spillway. Groundhogs typically burrow into the downstream slope while muskrats and sometimes beavers burrow into the upstream slope from below the water line. Collapse of the burrow can result in a hole in the crest of the dam. Burrows weaken the embankment and can serve as pathways for seepage. Beavers may plug the spillway and raise the reservoir level. Rodent control is essential in preserving a well-maintained dam.

The groundhog is the largest member of the squirrel family. Their average life expectancy is 2 or 3 years with a maximum of 6 years. Occupied groundhog burrows are easily recognized in the spring due to the groundhog's habit of keeping them "cleaned out." Fresh dirt is generally found at the mouth of active burrows. Half-round mounds and paths leading from the den to nearby fields also help identify inhabited burrows and dens.

When burrowing into an embankment, groundhogs stay above the phreatic surface (saturated zone) to stay dry. The burrow is rarely a single tunnel. It is usually forked, with more than one entrance and with several side passages or rooms from 1 to 12 feet long.

Figure 4-43 This groundhog hole should be checked for activity and backfilled after any rodents (if found) are removed.

Control methods should be implemented during early spring when active burrows are easy to find, young groundhogs have not scattered, and there is less likelihood of damage to other wildlife. In later summer, fall, and winter, game animals will scurry into groundhog burrows for brief protection and may even take up permanent abode during the period of groundhog hibernation. Groundhogs can be controlled by using fumigants or removal. Fumigation is the most practical method of controlling groundhogs. Around buildings or other high fire hazard areas, shooting may be preferable. Groundhogs will be discouraged from inhabiting the embankment if the vegetal cover is kept mowed. Information about the control of groundhogs may be obtained from IDNR.

The muskrat is a stocky rodent with a broad head, short legs, small eyes, and rich dark brown fur. Muskrats are chiefly nocturnal. Their life expectancy is less than 2 years, with a maximum of 4 years. Muskrats can be found wherever there are marshes, swamps, ponds, lakes, and streams having calm or very slowly moving water, with vegetation in the water and along the banks. Muskrats make their homes by burrowing into the banks of lakes and streams. Their burrows begin from 6 to 18 inches below the water surface and penetrate the embankment on an upward slant. At distances up to 15 feet from the entrance, a dry chamber is hollowed out above the water level. Once a muskrat den is occupied, a rise in the water level will cause the muskrat to dig farther

and higher to excavate a new dry chamber. Damage (and the potential for problems) is compounded where groundhogs or other burrowing animals construct their dens in the embankment opposite muskrat dens.

Barriers to prevent burrowing offer the most practical protection to earthen structures. A properly constructed riprap and filter layer will discourage burrowing. The filter and riprap should extend at least 3 feet below the water line. As the muskrat attempts to construct a burrow, the sand and gravel of the filter layer caves in and thus discourages den building. Heavy wire fencing laid flat against the slope and extending above and below the waterline can also be effective. Eliminating or reducing aquatic vegetation along the shoreline will discourage muskrat habitation.

Trapping with steel traps is usually the most practical method of removing muskrats from a reservoir. Owners should contact IDNR for regulations concerning trapping.

The recommended method of backfilling a groundhog or muskrat burrow on an embankment is mudpacking. This simple, inexpensive method can be accomplished by placing one or two lengths of metal stove or vent pipe in a vertical position over the entrance of the den. After it is certain that the pipe connection to the den does not leak, the mud-pack mixture is poured into the pipe until the burrow and pipe are filled with the earth-water mixture. The pipe is removed and dry earth is tamped into the entrance. The mud-pack is made by adding water to a 90 percent earth and 10 percent cement mixture until a slurry or thin cement consistency is attained. All entrances should be plugged with well-compacted earth and vegetation established. Dens should be eliminated without delay because damage from just one hole can lead to failure of a dam or levee.

Beaver will try to plug spillways with their cuttings. Routinely removing the cuttings is one way to alleviate the problem. Another successful remedy is the placement of electrically charged wire or wires around the spillway inlet. Trapping beaver may be done by the owner during the appropriate season; however, IDNR should be contacted to determine the proper seasons and techniques.

4.14 MAINTENANCE RECORDS

Thorough maintenance records are of utmost importance. A record should be kept of all maintenance activities, both preventive and repair maintenance work. Information that should be recorded includes the following as a minimum:

- date and time of maintenance
- weather conditions
- the type of maintenance
- name of person or contractor performing maintenance
- description of work performed
- the length of time it took to complete the work

- equipment and materials used
- before and after photographs

The data should be recorded by the person responsible for maintenance.