NOTICE OF APPLICATION FOR FEDERAL CONSISTENCY REVIEW
LAKE MICHIGAN COASTAL ZONE PROGRAM

Project Number: ER-17674

Name of Applicant: Margaret Rauwerdink

Address of Applicant:
US Army Corps of Engineers, Chicago District
231 South LaSalle Street, Suite 1500
Chicago, IL 60604

Project Description: East Breakwater Repair at the entrance to Washington Park Marina, Michigan City Harbor; encapsulation of about 110' of the existing structure with steel sheet pile and capping with an 18" slab

Location of Project: Michigan City, IN; LaPorte County

Send comments to the following no later than June 29, 2014:

Federal Consistency Review Coordinator, Environmental Unit
Division of Fish and Wildlife
Department of Natural Resources
402 West Washington Street, Room W273
Indianapolis, IN 46204
Electronic mail: **environmentalreview@dnr.in.gov**

Copies of the request, accompanying information and data are available for inspection at the following location:

Environmental Unit
Division of Fish and Wildlife
Department of Natural Resources
402 West Washington Street, Room W273
Indianapolis, IN 46204

DEPARTMENT OF THE ARMY
CHICAGO DISTRICT, U.S. ARMY CORPS OF ENGINEERS
231 SOUTH LA SALLE STREET, SUITE 1500
CHICAGO IL 60604

12 JUN 2014.

Technical Services Division
Hydraulic and Environmental Engineering Section

Steve Davis
Indiana Department of Natural Resources
100 West Water Street
Michigan City, Indiana 46360

Dear Mr. Davis:

The U.S. Army Corps of Engineers, Chicago District is proposing to repair a failed section of the east pier breakwater at Michigan City Harbor. The proposed activity includes encapsulation of approximately 110 lf of the existing structure with steel sheet pile and capping the structure with an 18 inch slab. This method is typical of many pier encapsulations on the Great Lakes and has been used previously at Michigan City Harbor. The existing failed concrete section will be crushed in-place after encapsulation, and used for interior crib fill. Additional aggregate will be required to support the new concrete section at the design elevation. An existing scour hole near the opening in the breakwater will also be filled with stone to prevent further scour and deterioration. Construction of this project is expected to occur in spring 2015.

The proposed activity complies with Indiana's approved coastal management program and will be conducted in a manner consistent with such program.

Under the principles of sovereign immunity, we believe the United States is not required to obtain a permit from the Indiana Department of Natural Resources (IDNR) for construction in Lake Michigan. The Supremacy Clause precludes application of local codes to federal projects where such laws attempt to regulate the plans and specifications of a federal project. See United States v. Montana, 699 F. Supp. 835 (D. Mont. 1988). We are not aware of the existence of a waiver of sovereign immunity that would apply to this permit. In addition, the permit is not needed for purposes of real estate access, because the submerged lands are subject to the federal navigation servitude. See U.S. v. Commodore Park, Inc., 324 U.S. 386, 390 (1945).

This letter includes a copy of the IDEM application for Authorization to Discharge Dredged or Fill Materials to a State Regulated Wetland and/or Waters of the State Permit. A copy of this letter has been sent to the IDNR Division of Water and the IDNR Environmental Unit for Federal Consistency.

Please let us know if IDNR has any concerns or questions about the Corps' decision to not apply for a permit, and we can arrange a meeting to discuss any issues. If IDNR believes that the permit applies to the Corps, please provide us with a detailed jurisdictional analysis for our consideration. Please feel free to contact Ms. Kim Sabo, District Counsel, at (312) 846-5350 or Ms. Margaret Rauwerdink, Environmental Engineer, at (312) 846-5502 with questions about the project. We look forward to working with you on advancing our mutual understanding of applicable requirements for the project.

Sincerely,

Christopher T. Drew
Colonel, U.S. Army
District Commander

Enclosure

Application for Authorization to Discharge Dredged or Fill Material to Isolated Wetlands and/or Waters of the State

State Form 51821 (R / 10-04)

Indiana Department of Environmental Management

INSTRUCTIONS: 1. Read the instruction sheet before filling out this form.

2. You must complete all applicable sections of this form

1. Applicant Information	2. Agent Information
Name of Applicant: U.S. Army Corps of Engineers, Chicago District	Name of Agent:
Mailing address: (Street/ PO Box/ Rural Route, City, State, ZIP Code) 231 S. LaSalle Street, Suite 1500, Chicago, Illinois, 60604	Mailing address: (Street/ PO Box/ Rural Route, City, State, ZIP Code)
Daytime Telephone Number: (312) 846-5502	Daytime Telephone Number:
Fax Number: (312) 353-2156	Fax Number:
E-mail address: (optional) margaret.a.rauwerdink@usace.army.mil	E-mail address: (optional)
Contact person: (required) Ms. Margaret Rauwerdink	Contact person:

3. Project/Tract Location			
County: LaPorte County, Indiana		Nearest city or town: Michigan City, Indiana	
U.S.G.S. Quadrangle map name (Topographic map): Michigan City West		Project street address (if applicable): None	
Quarter: NW	Section: 20	Township: 38N	Range: 4W
Type of aquatic resource(s) to be impacted: (Attach Worksheet One) Lake Michigan at Michigan City Harbor		Project name or title: (if applicable) Michigan City Harbor Breakwater Repair FY14	

Other location descriptions or driving directions:

Project is located on the east pier breakwater of Michigan City Harbor, adjacent to the boat harbor.

4. Project Purpose and Description (*Use additional sheet(s) if required*)	
Has any construction been started? ☐ Yes ☒ No	Anticipated start date: 4/1/2015
If yes, how much work is completed?	

Purpose of project and overview of activities:

A section of the existing east pier breakwater's concrete has collapsed due to failure of the infrastructure. This project will encapsulate the failed section with approximately 110 lf of new steel sheet pile and will cap it with an 18 inch concrete slab. The existing failed concrete section will be crushed in-place after encapsulation and used for interior crib fill. Additional aggregate up to 500 TN will be required to support the new concrete section at the design elevation. An existing scour hole near the opening in the breakwater will also be filled with stone to prevent further scour and deterioration. Stone, consisting of 1,306 cubic yards of INDOT Class 2 riprap and 64 CY of INDOT Class F bedding stone will be placed in 0.25 acre to fill the scour hole. Fill placement will be conducted below the Federal navigation depth in the Harbor with a top elevation not to exceed -18.0 LWD. Riprap materials will be obtained from a commercial supplier. Riprap will consist of clean materials free of fines (<5% passing the #200). See the attached plans for details of the work described here.

5. Avoidance, Minimization, and Mitigation Information: Applicants must answer all of the following questions *(Use additional sheet(s) if necessary - provide a detailed response to all applicable questions).*

A. For projects with Class II isolated wetlands –

1. Is there a reasonable alternative to the proposed activity?

N/A

2. Is the proposed activity reasonably necessary or appropriate?

N/A

B. For projects with Class III wetlands, adjacent wetlands, and/or streams, rivers, lakes or other water bodies –

1. Is there a practicable alternative to the proposed activity?

No. The only practicable alternative to the proposed activity is to not complete the action, which would result in increased failures of existing adjacent structures and breakwaters.

2. Have practicable and appropriate steps to minimize impacts to water resources been taken?

Yes. Concrete crushing within the breakwater will occur after encapsulation of the failed section. Fill materials will be obtained from a commercial supplier and will be free of fines and other deleterious materials. Fill materials will be placed and not dumped, into the scour hole which will limit resuspension of the existing bed.

Describe all compensatory mitigation required for unavoidable impacts.

No compensatory mitigation will be conducted for this action. Work is limited to the limits of the Federal channel and is a maintenance activity for a previously authorized project.

6. Drawing/Plan Requirements *(applicants must provide the following)*

a. Top/aerial/overhead views of the project site showing existing conditions and proposed construction.
b. Cross sectional view of areas of fill or alterations to streams and other waters.
c. North arrow, scale, property boundaries.
d. Include wetland delineation boundary (if applicable). Label all wetlands (jurisdictional, isolated and exempt) as I-1, I-2, I-3, etc. and the mitigation areas as M-1, M-2, etc.
e. Location of all surface waters, including wetlands, erosion control measures, existing and proposed structures, fill and excavation locations, disposal area for excavated material, including quantities, and wetland mitigation site (if applicable).
f. Approximate water depths and bottom configurations (if applicable).

7. Supplemental Application Materials *(applicants must provide the following)*

a. A wetland delineation of all wetlands on the project site (for projects with wetland impacts).
b. At least three photographs of the project site. Indicate the photo locations on the project plans.
c. If isolated wetlands are present, a letter from the Corps of Engineers verifying this statement.
d. Wetland mitigation plan and monitoring report.
e. Classification of all isolated wetlands on the tract (if isolated wetlands are present onsite).
f. Copies of all applicable local permits and/or resolutions pertaining to the project or tract.
g. Tract history (see instructions).

8. Additional Information that MAY be required *(IDEM will notify you if needed)*

a. Erosion control and/or storm water management plans.
b. Sediment analysis.
c. Species surveys for fish, mussels, plants and threatened or endangered species.
d. Stream habitat assessment.
e. Any other information IDEM deems necessary to review the proposed project.

9. Permitting Requirements

a. Does this project require the issuance of a Department of the Army Section 404 Permit from the US Army Corps of Engineers? ☐ Yes ☒ No

If no, you do not need to answer Part b.

b. Have you applied for an Army Corps of Engineers Section 404 permit? ☐ Yes ☒ No

If yes, please supply the Corps of Engineers ID Number, the Corps of Engineers District, the project manager, and a copy of any correspondence with the Corps. If no, contact the Army Corps of Engineers regarding the possible need for a permit application.

c. Have you applied for, received, or been denied a permit from the Department of Natural Resources for this project? ☐ Yes ☒ No

Please give the permit name, permit number, and date of application, issance or denial..

IN DNR notification letter submitted concurrently.

d. Have you applied for, received, or been denied any other federal, state, or local permits, variances, licenses, or certifications for this project?
☐ Yes ☒ No

Please give the permit name, agency from which it was obtained, permit number, and date of issuance or denial.

10. Adjoining Property Owners and Addresses

List the names and addresses of landowners adjacent to the property on which your project is located and the names and addresses of other persons (or entities) potentially affected by your project. Use additional sheet(s) if required.

Name Northern Indiana Public Service Co. (NIPSCO) Address 101 Wabash Street City Michigan City State IN ZIP Code 46360	Name Mayor Ron Meer Address Office of the Mayor, 100 E. Michigan Blvd City Michigan City State IN ZIP Code 46360
Name Stephen Davis, Indiana DNR Address 100 W. Water Street City Michigan City State IN ZIP Code 46360	Name Tim Frame, Michigan City Port Authority Address 200 Heisman Harbor Road City Michigan City State IN ZIP Code 46360
Name Officer in Charge, US Coast Guard Station Address 10 On the Lake City Michigan City State IN ZIP Code 46360	Name Address City State ZIP Code
Name Address City State ZIP Code	Name Address City State ZIP Code
Name Address City State ZIP Code	Name Address City State ZIP Code
Name Address City State ZIP Code	Name Address City State ZIP Code

11. Signature - Statement of Affirmation

I certify that I am familiar with the information contained in this application and, to the best of my knowledge and belief, such information is true and accurate. I certify that I have the authority to undertake and will undertake the activities as described in this application. I am aware that there are penalties for submitting false information. I understand that any changes in project design subsequent to IDEM's granting of authorization to discharge to a water of the state are not authorized and I may be subject to civil and criminal penalties for proceeding without proper authorization. I agree to allow representatives of the IDEM to enter and inspect the project site. I understand that the granting of other permits by local, state, or federal agencies does not release me from the requirement of obtaining the authorization requested herein before commencing the project.

Applicant's Signature: 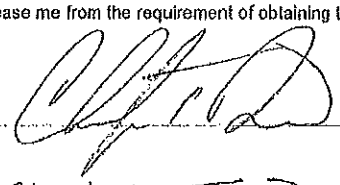 Date: 06/12/2014 (mm/dd/yyyy)

Print Name: Christopher T. Drew Colonel, U.S. Army Title: District Engineer

Worksheet – Summary of Onsite Water Resources and Project Impacts

A. Jurisdictional Wetlands (Existing Conditions)		Jurisdictional Wetlands (Proposed Impacts)			
Wetland Type	Size of wetland (acreage)	To be Impacted?	Acreage	Fill quantity (cys)	ATF
☐ EM ☐ SS ☐ FO		☐ Yes ☐ No			
☐ EM ☐ SS ☐ FO		☐ Yes ☐ No			
☐ EM ☐ SS ☐ FO		☐ Yes ☐ No			
☐ EM ☐ SS ☐ FO		☐ Yes ☐ No			
☐ EM ☐ SS ☐ FO		☐ Yes ☐ No			
☐ EM ☐ SS ☐ FO		☐ Yes ☐ No			
☐ EM ☐ SS ☐ FO		☐ Yes ☐ No			

Describe the type and composition of fill material to be placed in wetlands on the project site:

Describe the type and composition and quantity (cubic yards) of material proposed to be dredged or excavated from wetlands on the project site:

B. Isolated Wetlands (Existing Conditions)			Isolated Wetlands (Proposed Impacts)			
Wetland Class	Type	Size of wetland (acreage)	To be Impacted?	Acreage	Fill quantity (cys)	ATF
☐ 1 ☐ 2 ☐ 3	☐ NF ☐ F		☐ Yes ☐ No			
☐ 1 ☐ 2 ☐ 3	☐ NF ☐ F		☐ Yes ☐ No			
☐ 1 ☐ 2 ☐ 3	☐ NF ☐ F		☐ Yes ☐ No			
☐ 1 ☐ 2 ☐ 3	☐ NF ☐ F		☐ Yes ☐ No			
☐ 1 ☐ 2 ☐ 3	☐ NF ☐ F		☐ Yes ☐ No			
☐ 1 ☐ 2 ☐ 3	☐ NF ☐ F		☐ Yes ☐ No			

Describe the type and composition of fill material to be placed in isolated wetlands on the project site:

N/A

Describe the type and composition and quantity (cubic yards) of material proposed to be dredged or excavated from isolated wetlands on the project site:

N/A

C. Bridges and Stream Crossings - provide the following information for EACH structure *(Use additional sheet(s) if required)*

Stream name:

N/A

Description of impacts:

Length of upstream bank impacts:	Left side:	Right side:
Length of downstream bank impacts:	Left side:	Right side:
Bank protection fill placed below the Ordinary High Water Mark:		Volume per running foot:
Bank protection fill placed below the Ordinary High Water Mark:		Area of coverage:

D. Bank Stabilization – provide the following information for EACH segment (*Use additional sheet(s) if required*)
Water body name: N/A
Description of impacts:
Length of shoreline or bank protection:
Volume (cubic yards) of bank protection fill placed below the Ordinary High Water Mark per running foot:
Area (square feet) of bank protection fill placed below the Ordinary High Water Mark:

E. Stream Relocation	
Water body name: N/A	
Description of Impacts:	
Length of existing channel to be relocated: (linear feet)	
Length of new channel to be constructed: (linear feet)	
Existing channel to be backfilled: ☐ Yes ☐ No	Type of relocation: ☐ Piping ☐ Open Channel ☐ Other:
Type of fill and volume: (cubic yards)	

F. Open Water Fill
Water body name: Michigan City Harbor at Lake Michigan
Description of Impacts: Material to replace failed breakwater and fill in scour hole.
Area of water body to be filled: (acres) 0.25 acre for scour hole
Type of fill and volume: (cubic yards) 177 CY concrete cap, 500 TN interior stone fill, 14,000 SF sheet pile, 1,306 CY INDOT class 2 riprap & 64 CY INDOT class F bedding stone.

US Army Corps
of Engineers®
Chicago District

MICHIGAN CITY HARBOR
BREAKWATER REPAIR FY 14
MICHIGAN CITY HARBOR, IN

LOCATION MAP
(N.T.S.)

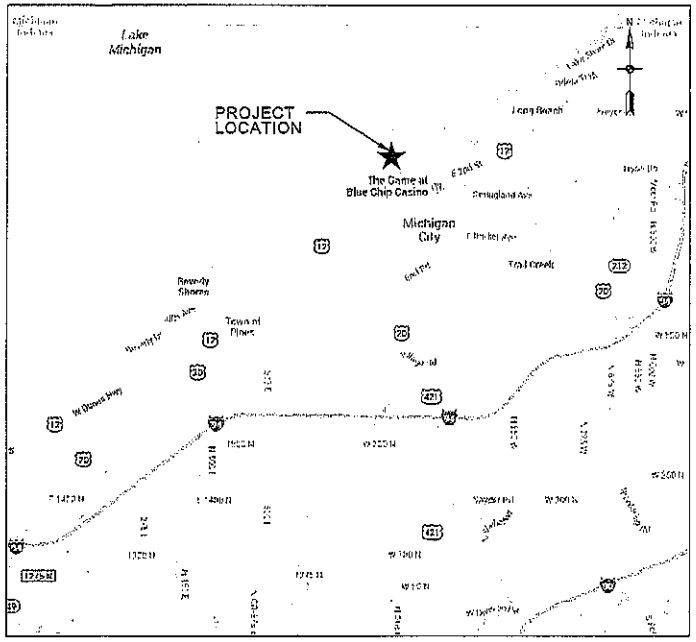

VICINITY MAP
(N.T.S.)

SHEET #	SHEET I.D.	SHEET TITLE
1	G-001	TITLE SHEET - LOCATION MAP AND SHEET INDEX
2	G-002	STAGING AND STORAGE AREA
3	V-001	SURVEY CONTROL
4	CS101	BREAKWATER SITE PLAN
5	S-101	REPAIR PLAN AT SOUTH END OF THE BREAKWATER
6	S-501	STRUCTURAL DETAILS
7	S-502	STRUCTURAL DETAILS

Preliminary Submittal - ATR BACKCHECK / 100% BCOES
June 2014

US Army Corps of Engineers® Chicago District

MARK | DESCRIPTION | TRACKING NO. | ACTION | DATE | MARK | DESCRIPTION | TRACKING NO. | ACTION | DATE

U.S. ARMY CORPS OF ENGINEERS
CHICAGO DISTRICT
CHICAGO, IL

MICHIGAN CITY HARBOR
BREAKWATER REPAIR FY 14
MICHIGAN CITY HARBOR, IN

TITLE SHEET -
LOCATION MAP AND SHEET INDEX

SHEET IDENTIFICATION
G-001
SHEET 1 OF 6

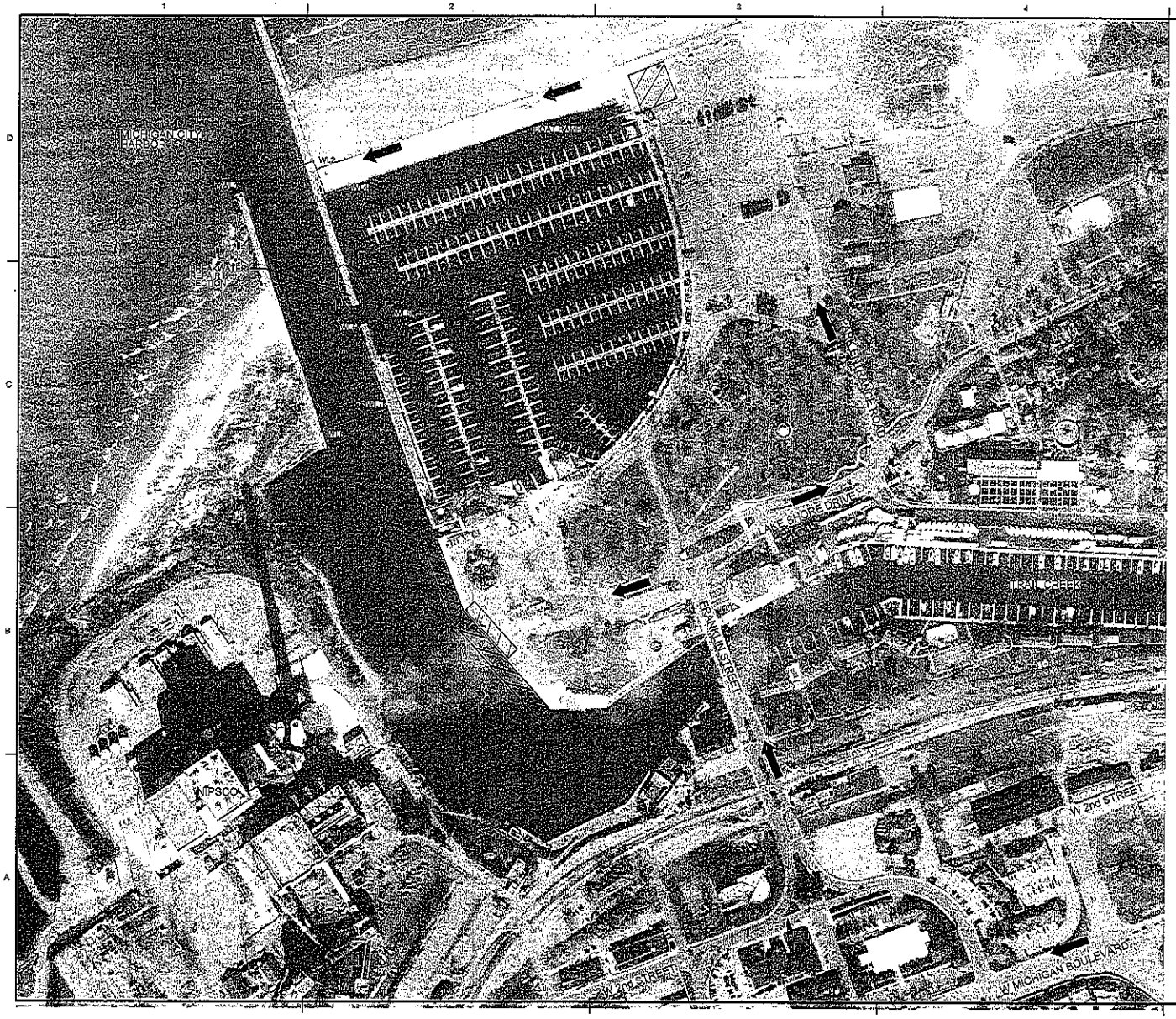

LEGEND

- STAGING & STORAGE AREA PROVIDE 6' CHAIN LINK FENCE WITH ACCESS GATE
- AREA FOR FLEETING VESSELS
- ACCESS ROUTE
- C/E — WORK LIMITS

WORK LIMIT POINTS		
PT #	NORTHING	EASTING
WL1	2,359,856.83	3,000,050.73
WL2	2,359,934.91	3,000,266.53
WL3	2,359,832.03	3,000,306.66
WL4	2,359,655.41	3,000,371.74
WL5	2,359,460.95	3,000,514.13
WL6	2,359,424.46	3,000,413.09
WL7	2,359,169.18	3,000,504.73
WL8	2,359,100.02	3,000,313.13

NOTES:

1. CONTRACTOR TO CONTACT THE MICHIGAN CITY PARKS & RECREATION DEPARTMENT AND MICHIGAN CITY PORT AUTHORITY PRIOR TO BEGINNING WORK TO COORDINATE ACCESS AND USE OF THE PARKING LOT FOR STAGING AND STORAGE.
2. STAGING AREA MAY BE MODIFIED BY COR TO ACCOMMODATE OTHER OPERATIONS AT THIS LOCATION.
3. CONTRACTOR TO COORDINATE WITH NIPSCO'S CONSTRUCTION OPERATIONS IN TRAIL CREEK.
3. CONTRACTOR TO COORDINATE WITH MICHIGAN CITY PORT AUTHORITY FOR FLEETING OF THEIR CONSTRUCTION VESSELS SHALL BE IN THE CHANNEL.
4. CONTRACTOR SHALL ACCOMMODATE THE PASSAGE OF COMMERCIAL AND RECREATIONAL VESSELS DURING CONSTRUCTION.
5. REFER TO SPECIFICATION SECTION 01 10 00 GENERAL PROVISIONS FOR NIPSCO, PORT AUTHORITY, AND PARKS & RECREATION CONTACT INFORMATION.

N

0 150' 300'

US Army Corps of Engineers® Chicago District

NO'S	DESCRIPTION	INITIALS/NO ACTION	DATE	MAKE	05/24/2021	INITIALS/NO ACTION	EAST

US ARMY CORPS OF ENGINEERS
CHICAGO DISTRICT
CHICAGO, IL

DESIGNED BY: JDA
DRAWN BY: CLV
JOHN TOOMEY, P.E.
PLOT SCALE: 1=1
PLOT DATE: 5/24/2021
M.S.L. DATUM
NAVD 88
JOB NO:
CONTRACT NO.
RUBEN MEJIA, CHIEF, REAL ESTATE DIVISION
FILE NAME: MICHIGAN CITY BREAKWATER REPAIR PT 14 STAGING AND STORAGE AREA.dgn

MICHIGAN CITY HARBOR,
BREAKWATER REPAIR PT 14
MICHIGAN CITY HARBOR, IN

STAGING AND STORAGE AREA

SHEET IDENTIFICATION
G-002
SHEET 2 OF 5

HORIZONTAL & VERTICAL CONTROL POINTS				
POINT	IN WEST NAD83 STATE PLANE COORDINATES		ELEV. NAVD88	DESCRIPTION
	NORTHING (Y)	EASTING (X)		
USACE 14	2,359,686.61	3,000,282.85	583.64	BRASS DISK
86-2	2,359,038.70	3,000,297.22	584.78	BRASS DISK
86-3	2,358,236.76	3,001,016.12	583.90	BRASS DISK

GENERAL NOTES

1. THE CONTROL POINTS SHOWN ON THIS SHEET ARE FROM AN APRIL 2014 SURVEY PERFORMED BY US ARMY CORPS OF ENGINEERS, CHICAGO DISTRICT AND REPRESENTS CONDITIONS EXISTING AT THAT TIME. EXISTING CONDITIONS DURING CONSTRUCTION MAY VARY AND DIFFER FROM THOSE SHOWN. THE CONTRACTOR SHALL TAKE ALL NECESSARY ACTIONS TO ASSESS THE EXISTING CONDITIONS AT THE TIME OF BIDDING, AND INCLUDE COST ACCORDINGLY IN THE BID.
2. ALL COORDINATES SHOWN ARE REFERENCED TO THE INDIANA STATE PLANE COORDINATE SYSTEM, WEST ZONE, NORTH AMERICAN DATUM OF 1983 (NAD83) U.S. FEET.
3. THE ATTACHED CONTROL POINTS HAVE BOTH NAVD88 AND IGLD85 VERTICAL DATA TIED TO THEM (SEE U-SMART SHEETS).
4. ALL HORIZONTAL AND VERTICAL CONTROL POINTS ARE REFERENCED TO NGS MONUMENTS ME2161, ME2160, ME2151, AND ME2152.

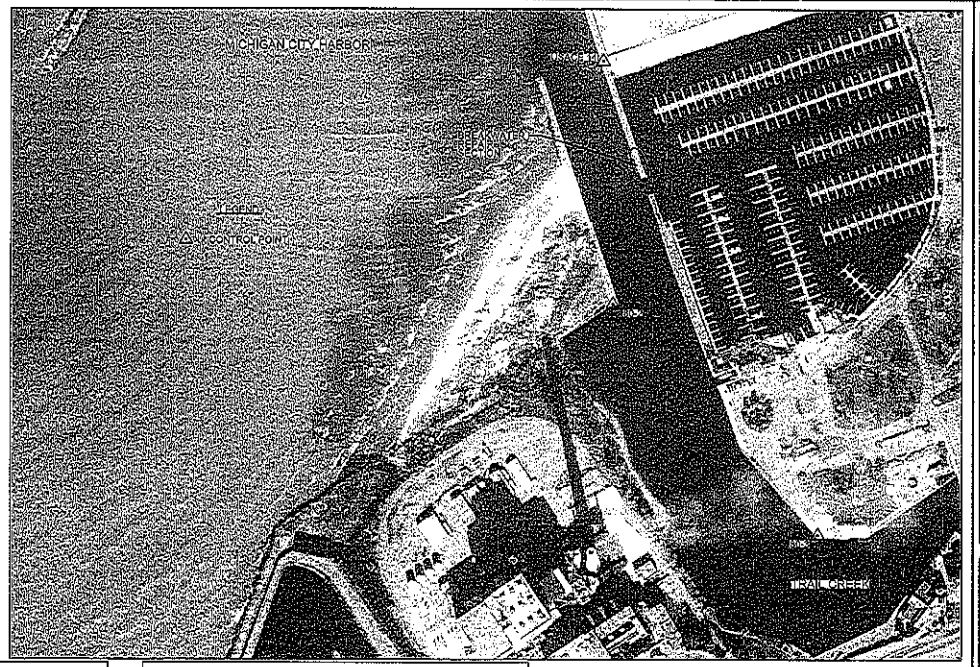

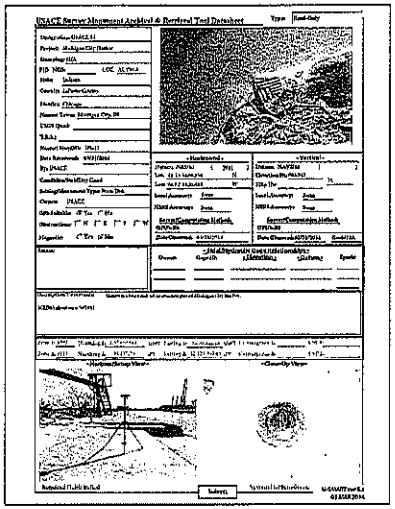

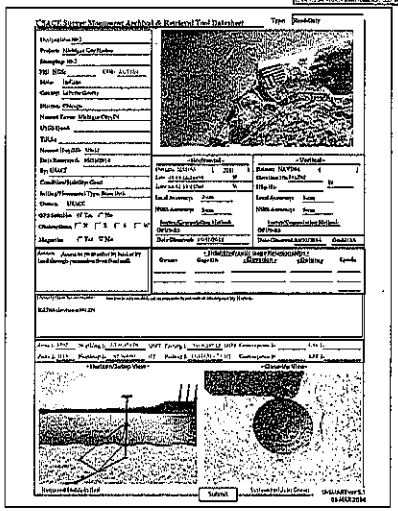

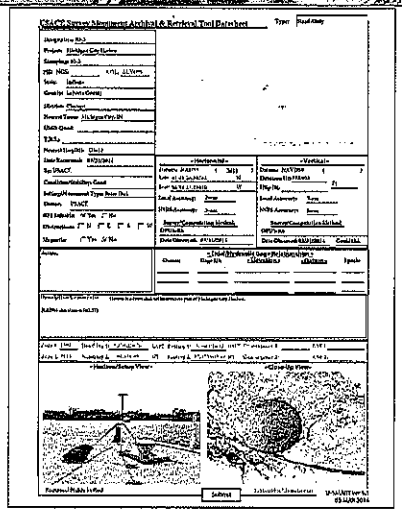

0 200' 400'

US Army Corps of Engineers® Chicago District

MARK	DESCRIPTION	DATE	MARK	DESCRIPTION	DATE

DESIGNED BY: DRAWN BY: CHECKED BY: QUALITY CONTROL BY: APPROVED BY:
DATE: APRIL 2014
CONSTRUCTION CONTRACT NO.: W912P4-14-C-0007
PROJECT NO.: 413825
DRAWING NO.: CONTRACT DRAWING

U.S. ARMY CORPS OF ENGINEERS
CHICAGO DISTRICT
CHICAGO, IL

LAKEFRONT CITY HARBOR
BREAKWATER REPAIR FY 14
MICHIGAN CITY, INDIANA, IN

SURVEY CONTROL

SHEET IDENTIFICATION
V-001
SHEET 3 OF 5

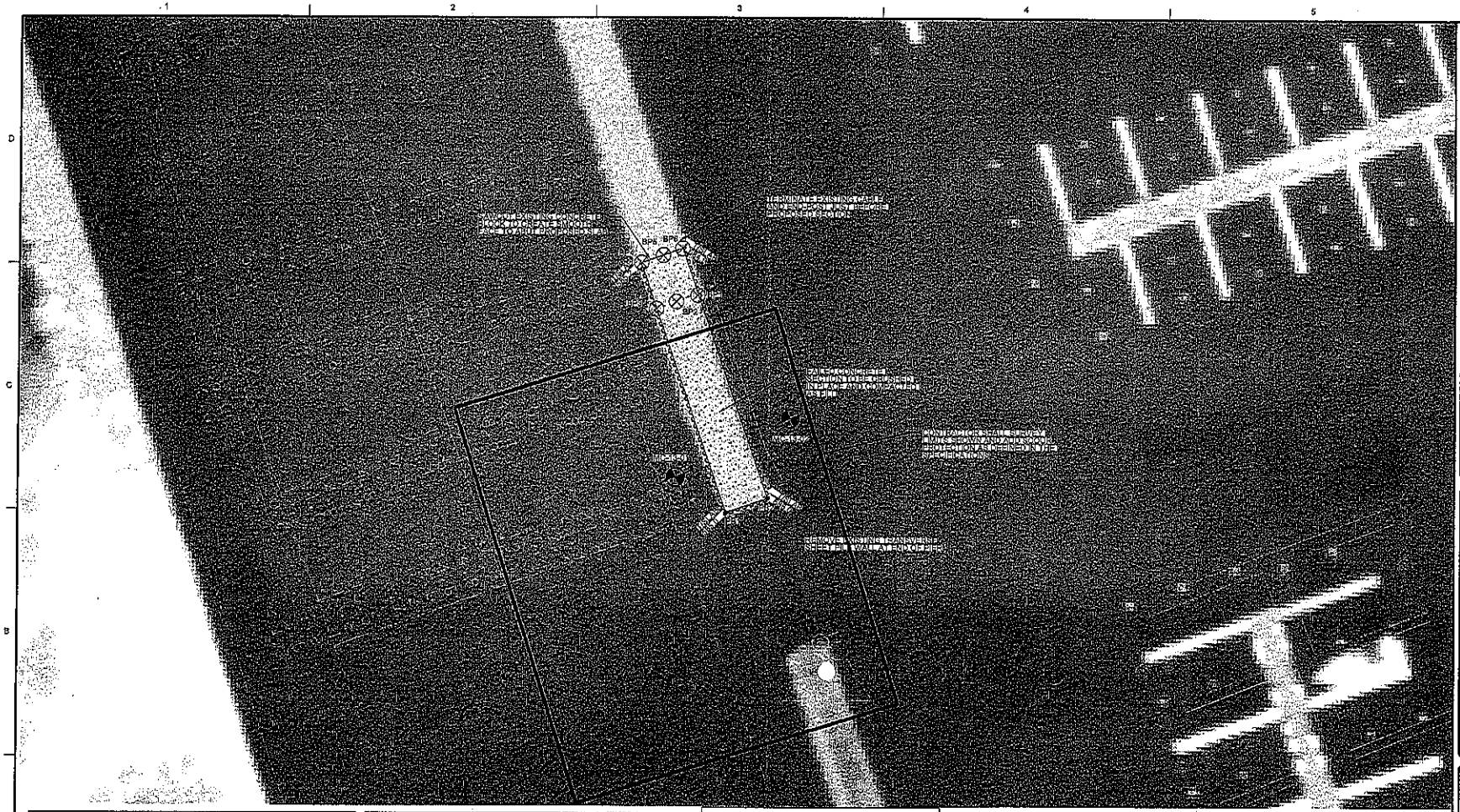

HYDROGRAPHIC SURVEY

1. THE INFORMATION DEPICTED ON THIS SHEET REPRESENTS THE RESULTS OF HYDROGRAPHIC SURVEYS PERFORMED BY US ARMY CORPS OF ENGINEERS, DETROIT DISTRICT ON APRIL 4, 2013 AND CAN ONLY BE CONSIDERED AS INDICATING THE GENERAL CONDITIONS PRESENT AT THE TIME.
2. ELEVATIONS AND SOUNDING DEPTHS ARE REFERRED TO INTERNATIONAL GREAT LAKES DATUM 1985 (IGLD 85). LOW WATER DATUM ZERO IS 577.5 FEET ABOVE MEAN WATER LEVEL AT FATHER POINT QUEBEC. WATER LEVEL READINGS ARE FROM AN AUTOMATED GAUGE LOCATED AT MICHIGAN CITY, INDIANA. DEPTHS ARE MEASURED USING A INNERSPACE 448 SINGLEBEAM SONAR.

EXISTING BREAKWATER POINTS SURVEY

1. THE EXISTING BREAKWATER POINTS SHOWN ON THIS SHEET ARE FROM A APRIL 2014 SURVEY PERFORMED BY US ARMY CORPS OF ENGINEERS, CHICAGO DISTRICT AND REPRESENTS CONDITIONS EXISTING AT THAT TIME. EXISTING CONDITIONS DURING CONSTRUCTION MAY VARY AND DIFFER FROM THOSE SHOWN. THE CONTRACTOR SHALL TAKE ALL NECESSARY ACTIONS TO ASSESS THE EXISTING CONDITIONS AT THE TIME OF BIDDING, AND INCLUDE COST ACCORDINGLY IN THE BID.
2. COORDINATES SHOWN ARE REFERENCED TO THE INDIANA STATE PLANE COORDINATE SYSTEM, WEST ZONE, NORTH AMERICAN DATUM OF 1983 (NAD83) U.S. FEET.
3. ELEVATIONS SHOWN ARE REFERENCED TO THE NORTH AMERICAN VERTICAL DATUM OF 1988 (NAVD88) U.S. FEET.

DATUM CONVERSION

NAVD88 - 0.54 = IGLD85
IGLD85 - 577.5 = 0 LWD
NAVD88 - 576.04 = 0 LWD

EXISTING BREAKWATER POINTS (NAVD88)

PT #	NORTHING	EASTING	ELEVATION
BP1	2,359,573.51	3,000,362.86	585.1
BP2	2,359,670.85	3,000,374.11	585.0
BP3	2,359,587.86	3,000,385.80	585.0
BP4	2,359,567.13	3,000,359.46	585.2
BP5	2,359,580.17	3,000,366.55	585.0
BP6	2,359,593.02	3,000,378.67	584.9

PROPOSED BREAKWATER POINTS (NAVD88)

PT #	NORTHING	EASTING	ELEVATION
PB1	2,359,483.10	3,000,395.22	585.0
PB2	2,359,468.03	3,000,412.56	585.0

LEGEND

- EXISTING BREAKWATER POINT
- PROPOSED BREAKWATER POINT
- T/SLAB 584.4 x — TOP OF SLAB ELEVATION
- PROPOSED SHEET PILE
- PROPOSED CONCRETE BREAKWATER

NOTES:

1. LOCATIONS, ELEVATIONS AND DIMENSIONS OF EXISTING STRUCTURES, UTILITIES, AND OTHER SITE FEATURES SHALL BE VERIFIED BY THE CONTRACTOR IN THE FIELD. THE CONTRACTOR SHALL IMMEDIATELY REPORT TO THE CONTRACTING OFFICER'S REPRESENTATIVE ANY SIGNIFICANT DISCREPANCIES THAT WILL INTERFERE WITH THE WORK. THE CONTRACTING OFFICER REPRESENTATIVE SHALL DETERMINE MEASURES AS MAY BE REQUIRED TO RESOLVE THE DISCREPANCY.
2. THE SPECIFICATIONS CONTAIN INFORMATION FOR THE TWO BORINGS SHOWN IN THE PLAN VIEW.

0 10' 20' 40'

US Army Corps of Engineers® Chicago District

U.S. ARMY CORPS OF ENGINEERS
CHICAGO DISTRICT
CHICAGO, IL

MICHIGAN CITY HARBOR
BREAKWATER REPAIR FY 14
MICHIGAN CITY HARBOR, IN

BREAKWATERS SITE PLAN

SHEET IDENTIFICATION
CS101
SHEET 4 OF 6

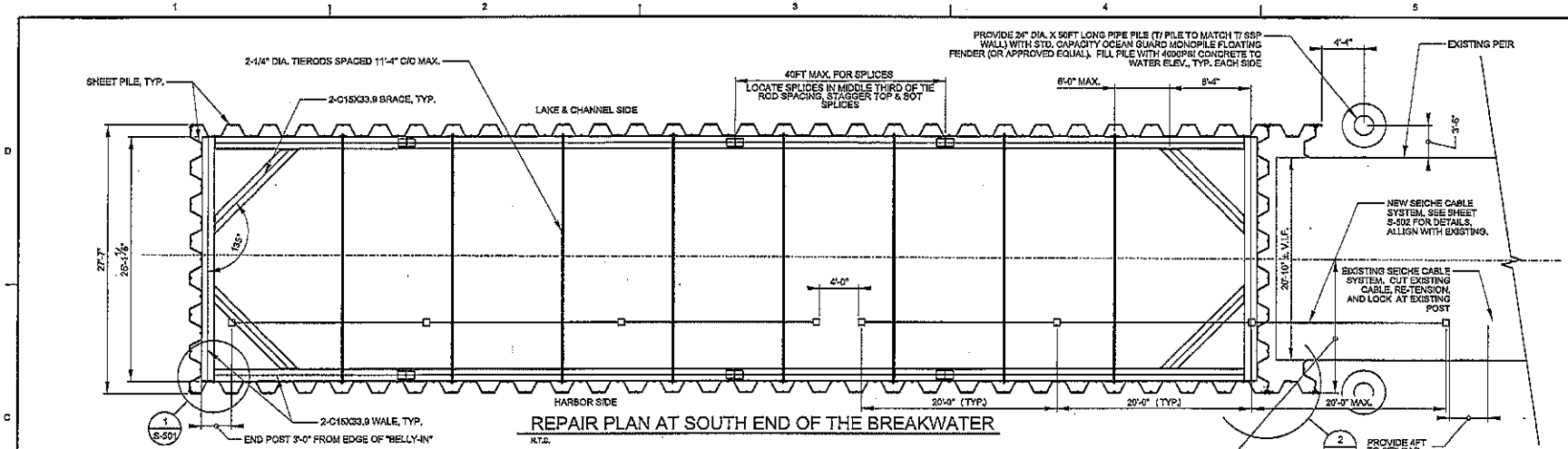

REPAIR PLAN AT SOUTH END OF THE BREAKWATER

N.T.S.

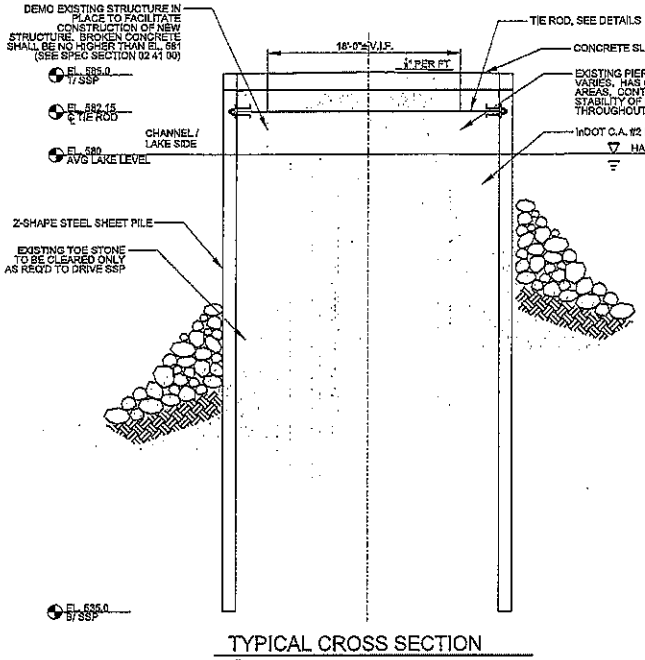

TYPICAL CROSS SECTION

N.T.S.

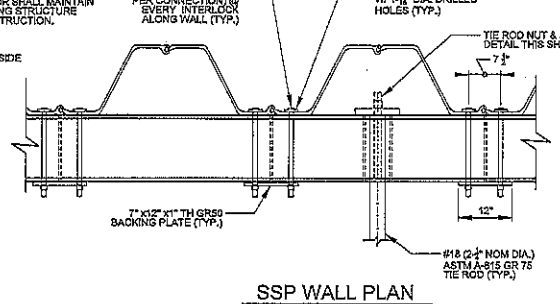

SSP WALL PLAN

N.T.S.

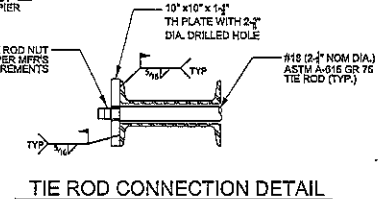

TIE ROD CONNECTION DETAIL

N.T.S.

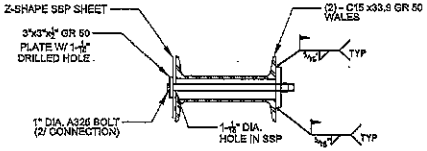

SSP/WALE TENSION BOLT

N.T.S.

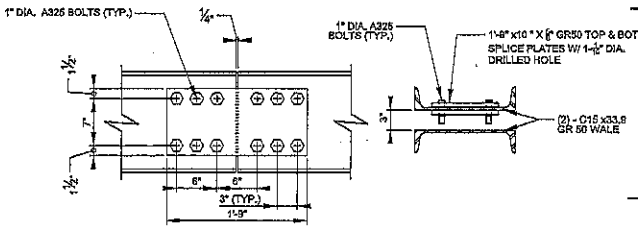

WALE SPLICE PLATE

N.T.S.

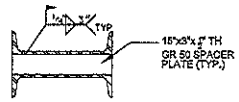

WALE SPACER DETAIL

N.T.S.

US Army Corps of Engineers® Chicago District

DESIGNED BY: JP | DRAWN BY: DKC | CHECKED BY: MKT | QUANTITIES BY: | SUBMITTED BY: | QUANTITIES VERIFIED BY: | DATE: | SUBMITTED: | CONTRACT NO.: | FILE NUMBER: | 24" x 36" | 12" x 18" | ACAD FILE: S-101.dwg

US ARMY CORPS OF ENGINEERS DISTRICT OF CHICAGO CHICAGO, IL

MUSKEGON CITY HARBOR BREAKWATER REPAIR FY 14
MUSKEGON CITY HARBOR, MI

REPAIR PLAN AT SOUTH END OF THE BREAKWATER

SHEET IDENTIFICATION
S-101
SHEET 0 OF 0

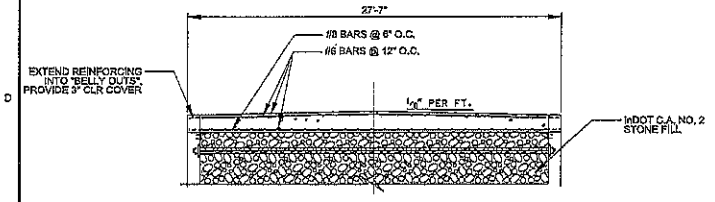

CAP SLAB REINFORCEMENT
N.T.S.

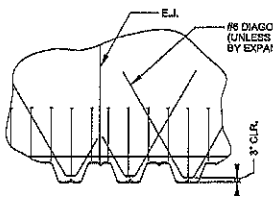

CAP SLAB DETAIL
N.T.S.

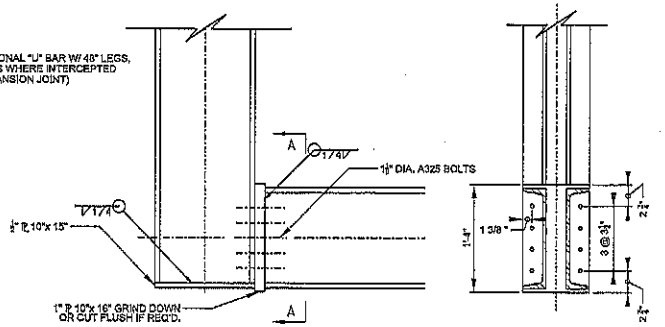

1 / S-101 90° WALE CONNECTION
N.T.S.

VIEW A-A

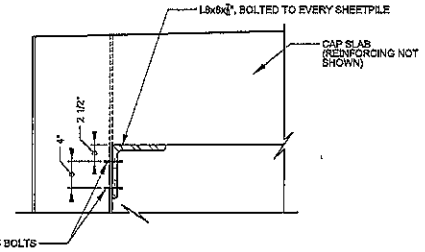

CAP SLAB SHELF ANGLE DETAIL
N.T.S.

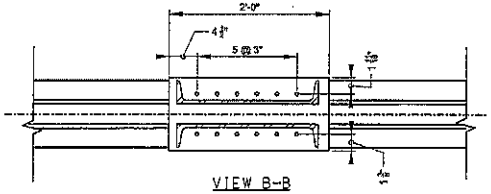

VIEW B-B

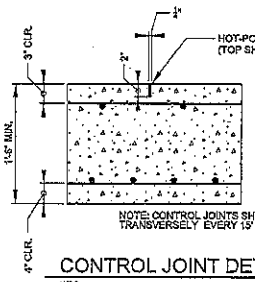

NOTE: CONTROL JOINTS SHALL BE PLACED TRANSVERSELY EVERY 15' OR AS DIRECTED BY C.O.R.

CONTROL JOINT DETAIL
N.T.S.

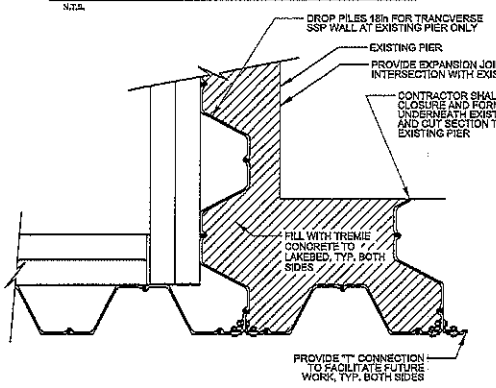

2 / S-101 RETURN CONNECTION
N.T.S.

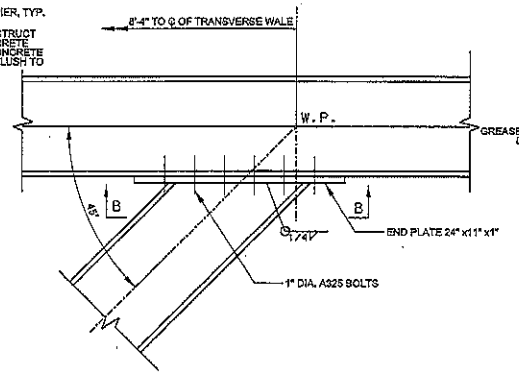

TYPICAL WALE BRACE DETAIL
N.T.S.

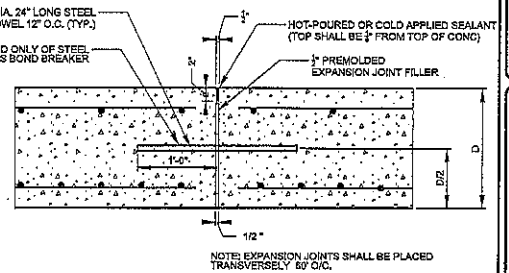

NOTE: EXPANSION JOINTS SHALL BE PLACED TRANSVERSELY 60' O/C.

EXPANSION JOINT DETAIL
N.T.S.

US Army Corps of Engineers® Chicago District

MARK	DESCRIPTION	INITIATED BY	DATE	APPROVED BY	DATE

DESIGNED BY: BW/PPS
DRAWN BY: DRC
CHECKED BY: PPS
QUANTITIES BY: DRC
SUBMITTED BY: DRC
INSPECTED BY: N/A
DATE: N/A
APPROVED BY: N/A
DATE: N/A

DESIGN SECTION
CONTRACT NO.
FILE NAME
PLOT SCALE: AS SHOWN
PLOT DATE: 1/4/2013
DESCRIPTION: S-501.dgn

U.S. ARMY CORPS OF ENGINEERS
CHICAGO DISTRICT
CHICAGO, IL

MICHIGAN CITY HARBOR
BREAKWATER REPAIR PH 14
MICHIGAN CITY HARBOR, IN

STRUCTURAL DETAILS

SHEET IDENTIFICATION
S-501
SHEET 0 OF 0

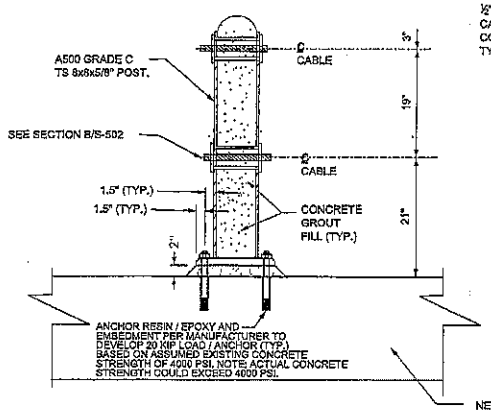

DETAIL AT 8x8
INTERMEDIATE POST

N.T.S.

1 / S-502

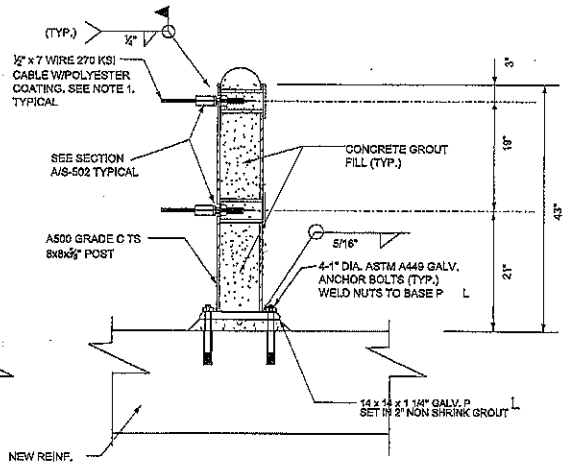

DETAIL AT 8x8 END POST

N.T.S.

2 / S-502

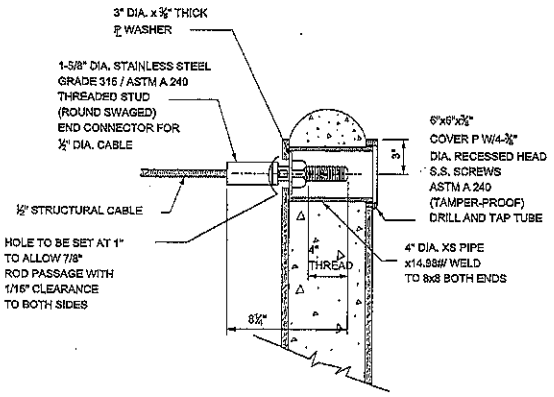

SEICHE CABLE -
END POST DETAL

N.T.S.

A / S-502

SEICHE CABLE & POST NOTES

1. CABLES SHALL BE INSTALLED PER MANUFACTURER'S SPECIFICATIONS WITH MINIMUM OF 3 KIPS TENSION AFTER SEATING LOSSES. COATING SHALL BE CUT AWAY AT END CONNECTOR TO ALLOW FOR ADEQUATE GRIP. CABLES, COATING, COATING COLOR, AND ALL HARDWARE SHALL BE APPROVED BY CONTRACTING OFFICER.
2. EXACT REQUIRED CABLE LENGTH SHALL BE FIELD MEASURED AFTER POSTS ARE SET. CABLE ASSEMBLY SHALL BE SHOP FABRICATED WITH SUFFICIENT ADJUSTMENT LENGTH TO PROPERLY TENSION THE CABLE.
3. INSTALL POSTS PLUMB AND IN PROPER ALIGNMENT.
4. TENSION CABLES TO 3 KIPS AFTER SEATING LOSS.
5. 4" PIPE IS TO BE WELDED TO THE POST AT BOTH ENDS.
6. SEICHE CABLE AND HARDWARE SHALL BE HOT DIPPED GALVANIZED.

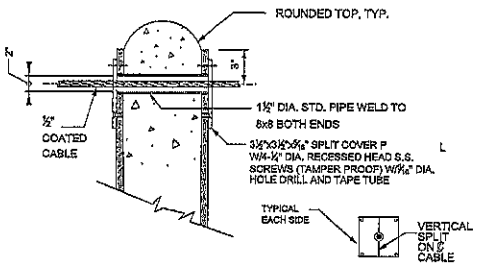

DETAIL INTERMEDIATE POST FOR
SEICHE CABLE

N.T.S.

B / S-502

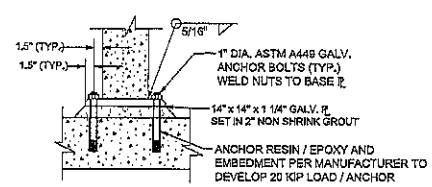

DETAIL OF POST TO SLAB
CONNECTION

N.T.S.

A / S-502

US Army Corps of Engineers®
Chicago District

MARK	DESCRIPTION	TRACKING NO.	ACTION	DATE	MARK	DESCRIPTION	TRACKING NO.	ACTION	DATE

U.S. ARMY CORPS OF ENGINEERS
CHICAGO DISTRICT
CHICAGO, IL

DESIGNED BY: P
DATE:
DWN BY: PRN
CKD BY:
SOLICITATION NO.:
SUBMITTED BY: STEPHEN R. TRAMANTE
CONTRACT NO.:
PLOT SCALE: 1" = 1'
PLOT DATE: 8/30/04
FILE NAME: 8x8x5/8 PIPE_SEICHE.dgn
SIZE: ANSI D

MICHIGAN CITY HARBOR
BREAKWATER REPAIR FY 14
MICHIGAN CITY HARBOR, IN

STRUCTURAL DETAILS

SHEET IDENTIFICATION
S-502
SHEET 6 OF 6