Strategy and Tactics for Initial Company Operations

Student Manual

1st Edition, 2nd Printing
August 2003
STICO

FEMA/USFA/NFA
STICO-SM
August 2003
1st Edition, 2nd Printing

Strategy and Tactics for Initial Company Operations

FEMA

Strategy and Tactics for Initial Company Operations

Student Manual

1st Edition, 2nd Printing
August 2003
STICO

U.S. DEPARTMENT OF HOMELAND SECURITY

FEDERAL EMERGENCY MANAGEMENT AGENCY

UNITED STATES FIRE ADMINISTRATION

NATIONAL FIRE ACADEMY

FOREWORD

On March 1, 2003, the Federal Emergency Management Agency (FEMA) became part of the U.S. Department of Homeland Security. FEMA's continuing mission within the new department is to lead the effort to prepare the nation for all hazards and effectively manage federal response and recovery efforts following any national incident. FEMA also initiates proactive mitigation activities, trains first responders, and manages the National Flood Insurance Program and the U.S. Fire Administration.

FEMA's U.S. Fire Administration (USFA) serves as the agency fire protection and emergency response community expert. It is located at the National Emergency Training Center in Emmitsburg, Md., and includes the National Fire Academy and the Emergency Management Institute. The mission of the USFA is to save lives and reduce economic losses due to fire and related emergencies through research and training, public education and coordination with other federal agencies and fire protection and emergency service personnel.

To achieve the USFA's legislated mandate (under Public Law 93-498, October 29, 1974), "to advance the professional development of fire service personnel and of other persons engaged in fire prevention and control activities," the USFA's National Fire Academy offers a diverse delivery system. Courses are delivered at the Emmitsburg campus and throughout the nation in cooperation with state and local fire training organizations.

TABLE OF CONTENTS

PAGE

Foreword iii
Table of Contents v
Course Schedule vii

UNIT 1: INTRODUCTION ..... SM 1-1

UNIT 2: THE ANALYTICAL SIZEUP PROCESS ..... SM 2-1

UNIT 3: FIRE CONFINEMENT, EXPOSURE PROTECTION, AND FIRE EXTINGUISHMENT ..... SM 3-1

UNIT 4: RESCUE, VENTILATION, SUPPORT, AND OVERHAUL ..... SM 4-1

UNIT 5: WATER SUPPLY, FIXED FIRE PROTECTION SYSTEMS, AND SALVAGE ..... SM 5-1

COURSE SCHEDULE

Unit 1:	Introduction
Unit 2:	The Analytical Sizeup Process
Unit 3:	Fire Confinement, Exposure Protection, and Fire Extinguishment
Unit 4:	Rescue, Ventilation, Support, and Overhaul
Unit 5:	Water Supply, Fixed Fire Protection Systems, and Salvage

UNIT 1: INTRODUCTION

COURSE OVERVIEW

Course Goal

Strategy and Tactics for Initial Company Operations is designed to develop the management skills needed by Company Officers (CO's) to accomplish assigned tactics at structure fires.

Target Audience

It is important to understand that the course material was developed for newly appointed officers or firefighters who may have acting CO responsibilities, but it would provide an excellent review for experienced officers.

Activities

All activities and scenarios used in this course are based on structure fires.

There will be a walk-through activity followed by one or more small group, scenario-driven, activities for each of the areas covered during the course.

A final, message-driven simulation activity will culminate Units 3, 4, and 5.

Student Manual

Support material (for use in class).

Text material (for postcourse reference).

- Provides background, and supplements course content.
- Students should not try to follow it while material is being presented.

STRATEGY AND TACTICS FOR INITIAL COMPANY OPERATIONS COURSE UNITS

Unit 1: Introduction.

Unit 2: The Analytical Sizeup Process.

- Scientific method.
- Variables.
- Making decisions.
- Establishing objectives.
- Evaluating primary factors.
- Command sequence action planning cycle.

Unit 3: Fire Confinement, Exposure Protection, and Fire Extinguishment.

- Fire confinement.
- Exposure protection.
- Fire extinguishment.

Unit 4: Rescue, Ventilation, Support, and Overhaul.

- Rescue operations.
- Ventilation practices.
- Incident support operations.
- Overhauling tactics.

Unit 5: Water Supply, Fixed Fire Protection Systems, and Salvage.

- Water supply.
- Fixed suppression systems.
- Salvage operations.

ACTIVITY

Activity 1.1

Student Introductions

Purpose

To meet the instructors and other students.

Directions

1. An instructor will perform roll call.

2. The instructors will introduce themselves and briefly discuss their background.

3. You will introduce yourself and give a brief overview of your background and expectations for the course. You will be allotted 2 minutes. Information should include your:

    a. Name and rank.

    b. Department or agency.

    c. Basic information on department/agency.

    d. Size of department/agency.

    e. Size of community.

    f. Current responsibilities.

    g. What you expect to get from attending this course.

UNIT 2: THE ANALYTICAL SIZEUP PROCESS

OBJECTIVES

The students will:

1. *Discuss the scientific method.*
2. *Describe the primary sizeup factors and determine their impact on objectives and strategies.*
3. *Analyze the command sequence action planning cycle.*

THE SCIENTIFIC METHOD

The Scientific Method involves observing facts, then testing the accuracy of these facts through continued observation. If the facts prove accurate, the scientist seeks some causal relationships between them and other happenings from which logical hypotheses can be deduced. Such hypotheses are in turn tested. If they are found to be true they are used to explain some aspect of reality and therefore to have value in predicting what will happen in similar circumstances. These hypotheses are then called principles.

For decades, the fire service has been observing facts at fire situations. These facts have led to valid hypotheses, or principles. By putting these principles into some logical order, that is, by systematizing them, we can take a step toward developing a science of firefighting. We can take an even greater step if we accept the help of scientific researchers in experimentation and verification.

Recognized authorities maintain that science is systematizing. This is not only because the underlying principles have been discovered, but also because the relationships between variables and limits have been ascertained. Accordingly, in this text, we will try to explain what variables and limits are, and how relationships between them have been ascertained. We will also try to explain how principles relating to firefighting or fire suppression have been derived.

Variable: In this text, variables associated with fire situations are classified as "primary" and "objectives and strategy." This is done to indicate a time sequence for evaluation and not necessarily a degree of importance. Such factors are variables because they change from fire to fire. Primary factors are the conditions or elements that should be recognized and evaluated on arrival and during operations.

Strategy and tactics are the activities undertaken to achieve objectives; such activities include forcing entry, ventilating, using hoselines, over-hauling, making decisions, establishing command posts, and so on. These variables have reciprocal relationships because of the inevitable effect of one activity on another.

For example, effective ventilation facilitates the advance of hoselines. Yet ineffective stretching or laying of hoselines nullifies the effectiveness of ventilation or even causes it to be harmful if it results in spreading the fire before a line is ready to operate.

Therefore, objectives and strategy also can affect such primary factors as extent of fire after arrival, heat and smoke conditions, exposure hazards, duration of operation, requirements to operate, and so on.

Limits: Limits are specifications for acceptable solutions at fires. For practical purposes, there are two particular limits. First, if there is a life hazard for occupants, risks to personnel ranging from merely unusual to extreme may be warranted. Second, if there is no life hazard for occupants, personnel are never to be jeopardized unnecessarily.

Underlying principles: Underlying or basic principles are fundamental truths applicable to a given set of conditions or circumstances; they indicate what may be expected to happen under these conditions or circumstances. Scientists already have discovered some of these principles that concern combustion: extinguishing of fire; transfer of heat by conduction, convection, and radiation; and the flow of liquids and gases. Using these basic principles, the fire service has formulated more specific principles governing fire activities, such as ventilating and using hose-lines.

Principles governing flow of fluids enable fire personnel to expect that when an obstruction reduces the velocity of convection currents rising through a vertical structural channel, pressure will increase and will be greatest immediately beneath the obstruction. This will cause the fire to spread toward areas of lower pressure, or least resistance, either mushrooming or moving horizontally. But if the obstruction is removed, for example, by making an opening in the roof directly above the involved vertical structural channel, the velocity of the rising gases will increase and the pressure will decrease. The decreased pressure will then minimize the possibility of horizontal spread of fire in the cockloft (the space between the top-floor ceiling and the underside of the roof). Similar reasoning applies to the formation of many other specific firefighting principles.

Firefighting principles are universal in application. That is, they are the same for all departments, large or small, paid or volunteer. But they may have to be applied in different ways because the primary factors change from one community to the next. For example, the primary factor of the availability of water supply varies in different communities. But when there is a life hazard for occupants the same principle applies to all: the first water available is used as quickly as possible, and as long as necessary between the fire and the endangered occupants or their means of escape. It does not matter whether the water comes from a booster tank in a small community or a standpipe riser in a city highrise building. It is this universal application of firefighting principles that makes standardized training both possible and practical.

PRIMARY FACTORS

In order to systematize the science of firefighting it is necessary to define variables and limits and to ascertain the relationships between them. Primary factors are considered variables because they change from fire to fire. The study of primary factors and the relationships between them will help officers carry out the first two steps in the action plan. These two steps are quite important. The first is to note and evaluate as accurately as possible the primary factors that are pertinent in the given situation. The second is to select objectives and activities on the basis of the evaluation made.

The Primary Factors Chart (see following page) facilitates the study of relationships between primary factors, and indicates the sequence of coverage. Extensive explanations are necessary since all primary and secondary factors that could conceivably be pertinent at all types of fires are considered. Lectures or discussions of past or structured fire situations, even when supplemented by motion pictures or diagrams, are of limited value. This is because the critical factors are specified, whereas at an actual fire critical factors must be recognized and evaluated under possible hectic conditions. In addition, such lectures or discussions may provide helpful information about only one set of circumstances in one given situation. Officers actually need helpful information about any set of circumstances in any fire situation.

EVALUATING PRIMARY FACTORS

Life Hazard for Occupants

Rescue work: Forcible entry is made with less regard for structural damage, exposure hazards, or the availability of a hose stream to protect personnel.

Ventilation unfavorable to controlling and extinguishing the fire may be needed to draw heat and smoke away from endangered occupants.

Available hose streams are used as required to cover the life hazard. In short, a life hazard for occupants and the resultant rescue activity can delay efforts to control the fire, making extinguishment more difficult.

Covering exposures: Life hazard may make the task of covering exposures more difficult and may delay the attack on the fire itself, e.g., aerial ladders used to remove occupants may have to be repositioned to use ladder pipes in protecting exposures.

Column #1 Primary Factor Size-Up Chart

Pertinent Factors (P)	(Check appropriate boxes)	P
Life Hazard	Occupants	
	Firefighters	
Location/Fire	Fire Bldg/ Exposures on Arrival	
	After Arrival – Burn Time	
	Radiation/Conduction/Convection	
Construction	Fire Building	
	Exposures	
Occupancy (Contents)	Fire Building	
	Exposures	
Height	Fire Building (Front/Rear)	
	Exposures (Front/Rear)	
Area	Fire Building/Configuration	
	Proximity of Exposures /Config.	
Structural Collapse	Fire Building	
	Exposures	
	Collapse Zone	
	Apparatus Placement	
Weather	Visibility	
	Temperature/Humidity	
	Wind – Direction/Velocity	
Resource Requirement	Apparatus/Personnel/Equipment - RIC	
	Water Supply/Suppression Agent	
Auxiliary Appliances	Fire Building Supplied	
	Exposures Supplied	
Topography	Street Conditions	
Explosions/ Back Draft	Flash Over Conditions	
Time	Duration of Operations (Rest-Rehab) Time of Day Time of Alarm	

Column #2 Incident Objectives Attainable/ Measurable/ Flexible

Examples of Incident Objectives:

- Safe Removal of All Occupants.
- Contain and Control Fire to Room/Building of Origin.
- Contain, Control and Limit Fire in Exposures.
- Other.

List Incident Objectives:

1. _____
2. _____
3. _____
4. _____
5. _____
6. _____
7. _____
8. _____
9. _____
10. _____

Column #3 Activities (Strategies)

[R] Rescue
- Interior/Exterior/Both

[E] Exposure Protection
- Exposure Examination

[C/E] Confinement/Extinguishment
- Hose Line Replacement

[O] Overhaul
- Expose Hidden Fire

[V] Ventilation
- Removal of Occupants
- Fire Control

[S] Salvage
- Water – Run-Off
- Apply Covers

Forcible Entry
- Location
- Method

Special Equipment
- Imaging Cameras

List Incident Strategies	Assign To:
1.	
2.	
3.	
4.	
5.	
6.	
7.	
8.	
9.	
10.	

Column #4 Evaluate Effect of Activities (Strategies) Every 10 Minutes

Effective	Ineffective

Identify alternative strategies for firefighter safety when occupant safety has been determined not to be a Primary Factor.

- _____
- _____
- _____
- _____
- _____
- _____
- _____

This can entail a harmful delay, intensifying and possibly creating new exposure hazards. In addition, involvement in rescue work will delay the evaluation of factors to establish an order of priority in covering exposures. Such coverage may have to wait for the arrival of additional resources.

Life Hazard for Firefighters

Safety: Acceptance of warranted risks is essential for good results in carrying out fire activities.

Location of Fire on Arrival

Forcible entry: It is preferable to force entry near the location of the fire especially when the area involved is large. This enables firefighters to get water on the fire more quickly and minimizes the physical hardship entailed in advancing hoselines.

Ventilation: The main objective of ventilation is to localize the fire--to stop its horizontal spread within a structure. For example, if a fire is extending into a cockloft via a pipe recess or similar channel, the roof should be opened. If this were done in the wrong place, it could be disastrous.

Opening a roof in the front when the fire is coming up in the rear can involve the entire cockloft and turn a first-alarm fire into a major fire. It is not advisable however, to open directly over a fire on an intermediate floor, because this could involve the upper floor.

Another objective of ventilation is to protect occupants pending rescue. For example, if a fire has cut off the escape of occupants, the decision where to vent is determined by the need to draw heat and smoke away from them. This is done even if the required openings increase the intensity of the fire and the possibility of spread (not to occupied areas, of course). If only horizontal ventilation is required, the location of the fire will indicate the floor to be vented and the openings in the roof.

The decision when to vent is determined by whether or not the location of the fire is creating a life hazard. If it is, ventilation may have to be started as soon as possible, even if hoselines are not ready or if an unoccupied exposure hazard may be created or intensified.

Removal of occupants: Location of fire is critical. A fire on the first floor of a five-story residential building could endanger all the occupants and necessitate their removal.

However, if the same fire originated on the fourth floor, it may be better to move occupants of the fifth floor to the first or second floors. This is especially true if the fire occurs on a cold night and occupants are scantily clothed.

Checking for extension of fire: A fire near a vertical or horizontal structural channel will spread readily. Officers assigned to check for fire extension should, therefore, note the location of fire and keep in mind how heat travels by conduction, convection, and radiation via exposed channels.

Placement and use of hoselines: The location of the fire determines the amount of hoseline to be stretched and, in some cases, the size. The minimum size hoselines to provide adequate protection for personnel are 1-3/4-inch and 2-1/2-inch. Smaller hoselines may not provide adequate water to combat the heat.

If the location of the fire has created a life hazard, hoselines should be placed to facilitate rescue, and should operate as soon as possible and until rescue is completed. If there is no life hazard, the fire location will still govern the placement of lines.

Use of special equipment: High-level fires may require the use of standpipe systems, ladder pipe, or other high-caliber streams. The fire may also influence the decision to use sprinkler systems or fixed systems of various types.

Extent of Fire After Arrival

Forcible entry: A light haze of smoke visible through heavy glass doors that feel cool to the touch usually indicates fire of small extent. In such circumstances, entry should be made in the manner least damaging to property. Use of a key may be a solution. Where the extent is obviously substantial, however, such consideration is not warranted. Speed in getting an efficient operation under way is more important.

Ventilation: The extent of fire should have a reasonable relationship to the amount of structural damage done in ventilating. That is, a hole should not be made in the roof when opening top floor windows is sufficient. But if the extent of fire is great, proper ventilation is more important than any structural damage.

Fire extent may determine whether roof ventilation should be attempted at all. For example, if two or more floors in an old loft building are fully involved in fire, one should not try to work either on the roof or in the

structure unless rescue work makes it essential. If the fire is so great that roof or fire escape venting is out of the question, heavy outside streams or aerial-ladder pipes may be used to break windows.

Construction

It is important for fire officers to know the type of structure that is burning. Such knowledge will help them determine the speed with which the fire may spread, whether it will spread vertically or horizontally or both, and how the objectives of rescue and extinguishment can best be achieved.

Knowledge of construction is essential if officers are to operate efficiently at structural fires, which often provide the consummate test of their knowledge and skill (science and art). Officers who can check internal extension of fire more frequently without unduly jeopardizing their subordinates should be rated more highly than those who resort to exterior operations. These latter operations cause maximum instead of minimum damage and consequently more often "lose the building."

Officers are not expected to be personally familiar with the structural layout of every building in their districts or communities. It is not unreasonable, however, to expect them to be familiar with structural features of special significance in local types of construction. In addition they should realize that a fire in a highrise or large industrial complex is no longer the sole responsibility of city firefighters. Hence, suburban as well as city firefighters should know how the construction associated with such occupancies can affect other related factors, and thereby an entire fire operation.

Fire restiveness in buildings depends, among other things, on the manner in which floors, walls, partitions, ceilings, columns, and girders are constructed. It also depends on floor areas, combustibility of the structural parts, roof conditions, and the degree to which horizontal and especially vertical channels are fire-stopped.

Horizontal channels could include hallways, corridors, ceiling spaces, cocklofts and plenums, floor spaces, doors, windows, and ducts. Fire also can travel horizontally when heat is conducted, for example, by metal beams, through intervening walls and partitions, or from wooden beam to wooden beam when they abut.

Vertical channels could include partitions, stairways, elevators shafts, dumbwaiter shafts, laundry chutes, ramps, escalators, air and light shafts, recesses enclosing pipes or electrical conduits, conveyors, and ducts

associated with air-conditioning systems and large cooking ranges. Fires also can spread vertically by burning through floors or ceilings or from floor to floor on the outside of the building.

Materials used in construction naturally affect the spread of fire. Some masonry materials with high fire-resistive ratings contain water in their makeup. This water slows down the heat transfer rate; it absorbs large amounts of heat and delays transmission until it has been evaporated. On the other hand, good insulating materials generally have low fire-resistive ratings. They, too, can slow down the heat transfer rate, partly by means of entrapped air, which absorbs heat and delays transmission, but not as effectively as high fire-resistive materials.

Ordinary Construction in Residential Buildings

This construction is common in congested areas of many large cities. It features many combustible structural members, fire escapes with gated windows, and numerous inadequately fire-stopped horizontal and vertical structural arteries, both open and concealed. It has one advantage, however: it is not tight enough to prevent the escape of considerable heat by convection and radiation, and it is therefore less likely to cause a back-draft or smoke explosion. Roof bulkheads, doors, and plain glass windows allow for ordinary ventilation.

The disadvantages cited for this type of construction can cause extensive fires on and after arrival, severe heat and smoke conditions, poor visibility, interior exposure hazards, and life hazard for occupants. The open construction allows much heat to escape, but this can become a disadvantage if it creates or worsens an exterior exposure hazard. Such a hazard can increase requirements to operate effectively, prolong the operation, and increase hazards for personnel.

Forcible entry: In recent years it has taken longer to gain entry because of the increase in crime and the resulting increase in locks on hallway doors and extended locked gates inside fire escape windows.

Ventilation: Horizontal ventilation is achieved by opening doors and windows. Vertical ventilation is achieved by opening roof bulkheads and making openings in the roof as conditions warrant. Usually both kinds of ventilation are required.

Placement and use of hoselines: Usually, hoselines are stretched via the interior stairs, and less frequently via fire escapes, ladders, and ladder-tower platforms.

Overhauling: There is likely to be more overhauling than usual if combustible structural parts are involved and concealed spaces have to be checked out.

Removal of occupants: Interior stairs are the preferred means of removing occupants, unless they are above the fire. In the latter case, fire escapes are used, but aerial ladders or tower-ladder platforms sometimes may be necessary. Occupants trapped in the rear without access to fire escapes or not reachable from ladders may be removed by firefighters who are lowered to them by ropes. In some instances, occupants taken to the roof via rear fire escapes can be brought down interior stairways of adjoining buildings.

Ordinary Construction in Commercial Buildings

These ordinary structures have combustible structural members that burn readily. They also lack fire-stopping material, thus enabling fire to spread quickly both horizontally and vertically. In addition, they are frequently old, which aggravates structural defects. Older loft buildings have still other unfavorable characteristics: subcellars, unusual depth (in some instances, 200 feet), unprotected metal columns, wide floor spans, and iron shutters.

Forcible entry: In commercial buildings, entry is seldom a problem during business hours. At other times, entry is hindered by iron shutters and door locks that often are intricate and difficult to force.

Ventilation: Ventilation is hampered by iron shutters. Sometimes there are conditions conducive to smoke explosions. In such cases it is of utmost importance to vent the roof, side, rear, or front of the fire area before opening at lower levels for entry. Fires in cellars or subcellars have limited means of ventilation: deadlights in sidewalks, sidewalk covering of entrances into cellars, and, under definitely controlled conditions, openings made in floors above the fire. In some situations fog lines or smoke ejectors can be helpful.

Rescue work: Rescue work can be impeded by a number of factors. High temperatures are common; severe smoke conditions may impair visibility; floor space may be crowded by workbenches, machines, and other materials; in some instances only a 3-foot aisle space is required by law. Frequently there are many employees, and exits may be unfavorably located, particularly above the second floor. Some exits, for example, are about 40 feet from the street front because the stairs run straight back to the third-floor landing. In addition, these exits may be in the heart of the fire. In such cases a ladder pipe or other appliance can be operated

through the street-front windows so that entry can be made with a handline (two lines if warranted) via ladders or even the interior stairway.

Ventilation Ventilation is a potent weapon for minimizing the life hazard. But it cannot always be used effectively unless the fire is located favorably or a roof opening can be made quickly to draw heat and smoke away from the life-hazard area. Occupants may be found conscious but so panic-stricken that rescuing them becomes unusually complicated. Some, unless strongly urged and guided, seek safety blindly, even disastrously.

Some of these buildings have two interior stairways, located at a distance from each other; other have one stairway and a fire escape. Occupants also can be rescued by means of ladders, tower-ladder platforms, and interior stairways of adjoining buildings when such building are accessible from the roof of the fire building. In extreme cases, life nets have to be used.

Placement and use of hoselines: Where a life hazard is present, the first hoseline is stretched and operated as quickly as possible between the fire and the endangered occupants or between the fire and the means of escape. Outside streams may be needed at times to help with the positioning of handlines.

Where no life hazard exists, lines are placed and used according to principles. However, in these loft buildings, the first line is more often stretched up the interior stairway and used to execute a holding action, to confine the fire to the involved occupancy, while the second line is brought up the fire escape, if one is available, to put out the fire. Because of the unusual depth of some buildings, and if the location of the fire is favorable for using such a technique, this is an acceptable variation of the usual procedure of operating the line from inside. Any auxiliary appliances (sprinkler, perforated pipe systems) must be supplied as conditions dictate. The correct inlet must be supplied, or warranted, and severe water damage may result. At low-level fires the correct inlet may be chosen by feeling for heat conducted from the fire area by connecting piping. Even the location of the fire may be found this way if all inlets are marked properly.

Supervision: The unusually risky nature of operations at loft fires requires extremely careful supervision. Entire fire companies have been injured or killed by falling through collapsed roofs and floors. Effects of the relationship among pertinent factors at these fires must be weighed with exceptional care before operations are initiated. All officers should be keenly alert to signs indicating possible structural collapse so that firefighters can be removed in time, and communication should be established promptly so that all units can be contacted quickly. Some

authorities recommend an exterior operation when two or more floors in such buildings are fully involved. This is a sound recommendation, but an exterior operation may be advisable even before the fire reaches that extent if there are conditions such as wide floor spans, unusual depth, combustibility of structural parts, unprotected metal columns susceptible to failure when heated and struck by cold water, excessive age of building, long duration of fire, and/or presence of heavy machinery or stock that absorbs water.

Overhauling: Since many parts of these structures are combustible, more than unusual amounts of structural overhauling can be anticipated.

Wood-Frame Construction

There are many variations of the exterior wall: wood shingles, clapboard, matched boards, brick veneer, stucco, metal-clad over wood sheathing, and so forth. Private, one-, or two-story dwellings feature such construction.

Some authorities maintain that large multistory frame buildings can be made reasonably safe if proper attention is given to protection against the horizontal and vertical spread of fire, against exposure fire, and against fire conditions which may be anticipated on the basis of expected fire loads. However, the same authorities also point out that conflagration may occur at fires in primarily residential sections due to closely built combustible construction and wood shingle roofs. Conflagrations are considered possible where certain construction practices are allowed, and where protection forces are weak and water supplies are inadequate. As a matter of fact, such fires can occur even where protection is strong and water supply is adequate, as attested by a fire involving many beach bungalows within the limits of a large city.

Statistics show that there is a large loss of life in rural and urban dwellings, presumably in buildings of frame construction. The lack of a prompt and adequate response by firefighters has much to do with these statistics, but structural features also play an important role.

Fire-Resistive Construction

In fire-resistive construction, walls and structural members are made of noncombustible materials or assemblies with the following minimum fire-resistive ratings: 4 hours for exterior walls, firewalls, party walls, piers, columns, and interior structural members which carry walls; 3 hours for other girders, fire partitions, floors (including their beams and girders), roofs, floor fillings, and required stairway enclosures. Such construction

does not feature central air-conditioning systems. The Empire State Building fire is a good example of how fire-resistive construction affects primary factors and objectives and strategy.

The Empire State Building is of steel skeleton construction and, although it differs somewhat from the specifications mentioned above, it fully qualifies as fire-resistive. The fire occurred after a U.S. Air Force bomber crashed squarely into the upper part of the building, spraying approximately 800 gallons of gasoline over where it struck. Parts of the 78th and 79th floors caught fire and burned furiously. Gasoline also descended one elevator shaft and caused a shaft fire all the way down to the basement level. "Too much cannot be said of the sturdy, well-constructed and fire resistive nature of the Empire State Building. Structural damage is comparatively negligible. The fire did not spread to other floors or portions of the building."

At the same time, it must be admitted that the fire is not always confined to one floor in the type of construction referred to as truly fire-resistive. The Woolworth Building had a grease-duct fire that extended from the basement to the roof, and the Empire State Building had a water-pipe insulation fire in a shaft that reached from the 31st to the 66th floor. Fires in shafts enclosing electrical cables, as well as in elevator shafts, contribute to the spread of heat and smoke in any construction. However, the records show that spectacular fires were very few and the loss of life was minimal in such structures as compared with their successors. The exception, of course, was the plane crash that sprayed 800 gallons of gasoline on two floors of the Empire State Building, although it still did not jeopardize the strength of the building.

Fire towers in fire-resistive buildings are in all likelihood the best means devised for the escape of occupants at fires. With some exceptions, older building codes required at least one such tower for public and business buildings that are 75 feet or more in height. Enclosing walls have a 4-hour fire-resistive rating. Outside balconies or fireproof vestibules connect the fire tower and the structure. Such balconies or vestibules are separated from the structure and the stairs by self-closing fire doors which can be opened from both sides without a key. They open on a street or yard, or on a vertical open court, which has a minimum net area.

It is practically impossible for heat and smoke to get into such fire towers because when doors are open between an involved occupancy and the balcony to advance a line or for other reasons, emerging heat and smoke rise vertically through the open court, rather than travel horizontally through the fire door into the tower. Stringent regulations governing openings in court walls minimize the hazard created by rising heat and smoke.

Forcible entry: In commercial structures, the watch staff may cause some delay if they wait for the fire department at the fire floor instead of at the street level from where they can direct the firefighters. In residential fire-resistive structures, such as hotels, one should use great care in opening obviously hot doors to unventilated, involved guest rooms; this can cause a backdraft with drastic results for personnel. In such cases, it is suggested that the door be kept closed, and indirect attack should be used by injecting fog through a small opening made in the partition to the fire room. The fire room then can be entered.

Ventilation: Doors and windows are used for cross-ventilation. Make openings first on the leeward and then on the windward side. Elevator shafts are not recommended because they only transfer the ventilating problem to an upper floor, endangering occupants who may be using the elevators and personnel working near the open shaft. In addition, they may cause unnecessary damage to the elevator mechanism. Use of fire stairs for ventilating is not recommended because the rising heat and smoke could endanger occupants trying to come downstairs. Also, if the occupants do not need the stairs, they could be used to alleviate heat and smoke conditions on the top floor.

Placement and use of hoselines: Fire departments have their own regulations about supplying and using hoselines from standpipe systems. Usually, it is advisable to stretch the first line from the outlet on the floor below the fire, and the second line (if needed) from the outlet on the fire floor. Lines are usually advanced from the windward side of the fire, especially down along corridors.

Overhauling: Overhauling is likely to be confined to contents rather than to structure, even though a major purpose of overhauling after control is established is to check contents and structural parts for any lingering fire. Since structural channels have to be checked out in order to declare a fire under control, comparatively little remains to be done about such channels thereafter, although smoldering contents may require much overhauling.

Removal of occupants: In buildings featuring fully fire-resistive construction without central air-conditioning systems, the fire department rarely has occasion to vacate occupants above the fire floor. As a matter of fact, at fires in hotels of this type, it is preferable to leave occupants of the floor in their own rooms rather than take them out of smoke- and heat-free areas into hot and smoky corridors toward fire stairs.

In very unusual cases, however, fires can extend vertically in the best fire-resistive construction due to explosions or via exterior windows or shafts enclosing electrical conduits or insulated water pipes. In these instances, occupants above the fire floor must be removed, preferably by means of

fire towers. Other ways include using a stairway that does not enclose the standpipe riser used to supply hoselines, because such a stairway is open at the fire floor and allows smoke and heat to enter and rise. Where removal of occupants from above the fire is necessary, particularly at high levels, leaving them just a floor or two below the fire can speed such removal, unless the need for medical attention dictates otherwise. Elevators exposed to heat and/or smoke, or affected by call buttons responsive to heat, smoke, or flames should not be used.

Modern Highrise Buildings

These structures generally have been built in the international style of steel and glass, with open floors, service cores, sealed windows, air-conditioning systems, and plenums (the space between the ceiling and the floor above). The cores are of reinforced concrete and contain stairs, elevators, utilities, and air-conditioning equipment. Plenums contain air-supply ducts, lighting fixtures, power lines in conduit, telephone cables, and communication cables. Careful study of the 1993 World Trade Center fire shows how modern highrise construction affects other primary factors.

The building is subdivided into many vertical components so that the possibility of total involvement in fire is almost impossible. There are only three vertical shafts (elevator) that travel the height of the building. Only one of these has openings on every floor and is designated for fire department use. The other two shafts open only at the ground floor, the sky lobbies (44th and 78th floors), and in the upper third of the building. The chimney effect so often mentioned in highrise buildings is not 110 stories in effect, but is divided into four components by the action of the air-conditioning systems. None of the stairways runs straight from the top to the bottom of the building. Stair towers are offset at various floors where the size of the core changes or the number of elevators serving a floor is reduced. At each of these points, horizontal passageways lead to the new shaft location and fire doors are provided in the passageway. These doors would prevent smoke from contaminating a stairway from top to bottom. The arrangement of elevators is such that they could not carry fire throughout the building but could be a factor in only a limited number of floors. It might even be feasible to use most elevators for evacuation; all except those that served the seven or eight floors that included the fire floor.

An item of particular interest to the fire service is the fact that the air-conditioning system can be placed in the purge mode after a fire alarm is received. This means that fresh air is drawn out of all the tenant areas on the affected floor to prevent smoke from spreading throughout the building. By supplying fresh air to the core and shutting down its normal

vents, elevators as well as stairs can be pressurized and exit corridors can be kept free of smoke. To draw air out of the tenant areas, only the return air fans operate and discharge to the outside of the building.

Proponents of this system apparently feel that a normal temperature would exist in the return airshaft because of the volume of cool air being drawn in from other floors. In the meanwhile, the supply air fans are shut down, and a question arises about the overall effects of such tactics on occupants in the tenant areas affected, especially if the fire operation is prolonged and the weather is hot.

Air-conditioning systems: In one of the types of highrise construction, the air-conditioning system serves the core only, and occupancies around the perimeter of the building are provided with individual units. Thus, smoke and heat cannot be conveyed into these occupancies by air-conditioning-system ducts. In case of fire, the main system can be shut down temporarily and the individual units can be operated on exhaust, thereby creating a favorable flow of smoke and heat, facilitating the advance of hoselines, and expediting extinguishing. At the same time, smoke and heat are being driven away from, rather than toward, the main air-conditioning system, thus lessening the likelihood of the spread of smoke to other floors via the ducts in such systems. If necessary, operating the return-air fans only and dumping outside the building can dissipate smoke and heat effectively in the plenum area over an involved occupancy. Low-velocity fog injected into involved plenums could minimize heat conditions. In addition, it is possible that individual air-conditioning units, operating on intake on the fire, except in the involved occupancy, may abet the flow of heat and smoke out of the structure. They also may make it unnecessary to break windows to get air.

In the best fire-resistive construction, mechanical failure of controls, inadequate control over flammable contents, and structural defects which negate the fire-resistive rating of floors and partitions, increase the possibility of both vertical and horizontal spread of heat and especially smoke at a highrise fire. Aside from such possibilities, however, construction that features an air-conditioning system that serves the core of the building only and individual units for occupancies around the periphery of the building is a major improvement in fire protection.

Moreover, fire operations can be carried out more safely and effectively. Finally, such construction suggests a favorable alternative to the use of pressurized stairways and elevators. Pressurized systems are not features of the construction discussed here.

Although the air-conditioning systems in new highrise buildings prevent some hazards, older systems present even more. Many systems in use today were installed before effective laws governing their installation

came into being. At the least, this lack resulted in little standardization, and generally it resulted in many shortcomings. Combustible materials, such as cotton, paper, steel wool, and felt were used for filters, and many also were coated with high-flashpoint oil to catch the dust. Some portions of the ducts were lined to reduce transmission of noise or heat through the duct walls, and sometimes the lining was combustible. In addition, ducts could be dangerously near other combustible materials, which eventually would be susceptible to ignition. Sometimes, too, coils containing a toxic or flammable refrigerant gas could be distributed throughout the ducts, intensifying the life hazard for all concerned.

Dampers may help to check the spread of heat in both new and old systems, but to date there is no evidence that they can control the spread of smoke and gas satisfactorily. Another common feature is supply inlets in exterior walls that create an exposure hazard from fires in other buildings.

Other air ducts: Of special significance are air ducts with roof fan housings that are designed to remove gas and heat from large cooking ranges in restaurants, nightclubs, hospitals, and so forth. With improper maintenance, grease can accumulate in ducts and ignite, usually in peak hours in restaurants and nightclubs. Rescue work can be difficult when owners are reluctant to let customers go without paying their bills, customers are reluctant to leave without their coats and hats, or exits are chained to prevent people from sneaking in without paying.

Smoke may obliterate exit signs and occupants may try to get out by the way they entered. Or a sudden worsening of heat and smoke conditions caused, for example, by prematurely shutting down the fan, can result in panic. The life hazard can be worse if the involved occupancy is below ground or inaccessible from ladders or tower-ladder platforms.

Regulations governing access to exits frequently are violated. Difficulties are complicated by the fact that protective hoselines have to be stretched without interfering with the egress of occupants. In such cases, fans should be kept operating to alleviate smoke and heat conditions pending rescue, assuming a worse hazard is not thereby created on the lee side of the roof fan housing.

While operating in an involved kitchen area, personnel should be aware of some unusual hazards: gas valves still in the "on" position after the flame is out, large pots containing very hot contents which can be overturned, and floors made slippery by melted grease. Extinguishing can usually be achieved in the kitchen area by one or two fog lines.

Extension can be reduced, by sweeping the exterior surface of exposed ducts with fog, or injecting fog into the duct if there is sufficient heat to

cause vaporization. A line to the roof fan housing also may be needed to extinguish and prevent extension of fire.

The hazards presented by these fires can be reduced greatly by the installation and proper maintenance of auxiliary appliances such as approved steam extinguishing, carbon dioxide, dry powder, fine water spray, or the newly developed combination fan-and-grease collector systems. However, such protection is not provided everywhere and, in addition, there is always the possibility of mechanical failure or human shortcomings relative to maintenance.

Ducts are present in many forms in various occupancies, and in many respects their effects resemble those created by horizontal and vertical structural channels. Fog can be helpful in coping with fires in such ducts and channels, provided there is sufficient heat to vaporize the fog so that it can exert an effective smothering and cooling effect. In vertical ducts and channels it is preferable to inject the fog at fire level. Experimentation by fire research scientists in this area is desirable.

Alterations in Building Construction

Alterations are not always carried out in accordance with the law or with recommendations in nationally recognized codes, nor are defects of many years' standing always fully rectified by retroactive laws. In addition, structural changes required at times because of a new occupancy are not always made. As a result, in some cases areas remain excessive, metal columns are inadequately protected, and door assemblies in dividing walls lack the required fire resistance. In other cases, installed dropped ceilings cover structural defects, and frequently alterations increase the number of concealed spaces by various kinds of false-work, double or triple flooring, and so on. Before explaining how alterations in construction can affect other primary factors and objectives and strategy, let us review an actual fire in a building that had undergone alterations.

The fire originated about noon on a Sunday in September. It started in the kitchen area at the rear of a restaurant in a seven-story residential brick-and-joint building erected in 1887. Originally a brick and concrete roof served as a terrace but it was subsequently covered with wood roofing seven layers of tarpaper, and tar finish. Many years later, in 1967, extensive alterations were made to increase the number of apartments per floor. In the process, ceilings of bathrooms and the public hall were dropped and sheet-rock was used between apartments and public halls. The sheet-rock was omitted, however, on the inner side of public hall partitions next to furred-out pipe spaces, and these pipe spaces were not adequately fire-stopped. The required sheet-rock also had been omitted on

one or both sides of public hall partitions, but the hung ceiling covered this omission. Fiberglass bats used between studs for firestopping and soundproofing proved to be completely ineffective as a fire-stop under the heavy fire conditions.

As a result, the fire entered an L-shaped 5- by 5-foot pipe recess at the second floor and raced unimpeded into the cockloft. Openings punched through walls for wiring and plumbing lines and covered by the hung ceiling caused horizontal spread of the fire. Fortunately, the time of origin minimized the life hazard for occupants who could be alerted and removed readily. Fortunately also, fire escapes had been provided during the alterations and were helpful in the operation.

The major objective was to confine, control, and extinguish. The greatest difficulties were in trying to confine and control the fire in the cockloft. The fire there had to be attacked from below, and the severe heat and smoke conditions and poor visibility could not be alleviated effectively by roof ventilation. Control finally was achieved by a third-alarm assignment and use of 11 handlines, aided by the work of ladder and rescue companies. Thirty-seven injuries were reported as a result of this fire, and 44 air cylinders were expended, attesting to the severity of the smoke conditions and the absence of effective roof ventilation.

Alteration in this case represented errors of omission as well as commission, and adversely affected location and extent of the fire on and after arrival. They also worsened heat, smoke, and visibility conditions and the exposure hazard; increased the duration of operation and requirements to operate, especially rescue company equipment; intensified the life hazard for personnel; and could have created a very serious life hazard for occupants if the fire had occurred at night.

Neither alterations abetting horizontal spread of the fire, nor the pipe recess abetting vertical spread were visible, which made it difficult to determine the location and extent of the fire on and immediately after arrival. Concrete and brick construction on the roof prevented ventilation that could have localized the fire and alleviated smoke and heat conditions. This made it extremely difficult to operate lines used to attack the fire in the cockloft from the floor below. Roof construction and other alterations increased the amount of structural overhauling needed both before and after control was established.

If required structural alterations are not made when an occupancy changes from noncombustible, highly undesirable results can accrue. Such alterations may necessitate new partitions to subdivide areas, protection of metal columns, a higher fire-resistive rating for doors in subdividing walls, and so forth. In one case, however, failure to comply with these

requirements resulted in total involvement and collapse of the fire building, and a $2 million fire loss.

Buildings Under Construction

During the day, fires in these structures usually do not present serious life hazards because they are discovered quickly and the average worker can get out of harm's way readily. At night, however, the fire department may have to search for one or more watch staff, and the hazards in general, already great, are intensified.

Fires in buildings under construction, particularly at high levels, can reach major proportions quickly. There are many reasons for this: construction is wide open, providing ample oxygen; much fuel is supplied by combustible debris, wooden interior scaffolding, chutes, sheds, shanties, and possibly concrete forms; paints, oakum, excelsior, tarpaulins, and the like are an additional source of fuel; tanks containing flammable gases for use in cutting torches, dangerous gases for heating purposes, and cartridges used for riveting, may be present and exposed; winds prevailing at high levels generally are strong. There may be, and often are, abnormal delays in getting water to the fire floor. In addition, openings in floors and the absence of windows, doors, and completed walls and partitions abet horizontal and vertical extension of the fire.

There is always the danger of timbers falling from topsides. The exposed steelwork on top may buckle, weakening the structure. The concrete beams and slabs on upper stories may not be set; if the wooden supporting forms burn, the floors may drop. Fires at high levels beyond the range of high-caliber outside streams present the most serious problems, especially if standpipe systems are inoperative. In such cases, a fire that actually requires only one stream for extinguishing may necessitate the use of a full first-alarm assignment because the line may have to be stretched up the outside of the structure and this is a laborious process.

Danger from the use of explosives for blasting in the very early stages of construction is somewhat alleviated by strict regulations, careful surveillance, and competent watch staff. Some fire departments, as a precautionary measure, prohibit the use of radio transmitters on department vehicles within 150 feet of magazines containing explosive caps; at close quarters radio waves may energize the detonating mechanism.

Structural features are considered in conjunction with occupancy contents (such as combustible materials and flammable gases). Such total situations can have adverse effects on the location and extent of the fire on

and after arrival. They can create smoke conditions that develop problems in exterior exposures, heat conditions that can buckle exposed steelworks, and a spark-and-ember hazard that can worsen the exterior exposure hazard. They also can result in greater alarm requirements to operate and a prolonged operation, with considerable danger for personnel, especially if the fire is at night. There is even more danger if tanks containing flammable gases explode.

An oddity about this type of structural fire is the minimal need for forcible entry and ventilation. Stress is on the placement and use of lines. Inadequate guardrails may protect when lines are being advanced via stairways and on floors. Supervision is exceptionally important because stairs at the upper levels may be unfinished and there may be floor openings. Operative standpipe systems should be supplied and used, or else lines may have to be stretched up the outside of the structure, in which case the need for sufficient personnel must be anticipated.

Fire buildings under construction can sometimes be kept minor by the prompt use of a deck pipe or similar equipment. For example, in one case in which the standpipe system was inoperative, a deck pipe was used to extinguish a fire in debris on a setback on the 12th floor while a line was being stretched up the outside of the building.

If the fire is within reach of streams from ladder pipes or tower-ladder platforms, fog from the windward side can be effective. Solid streams would be advisable, however, if greater penetration were needed.

The exterior exposure hazard in buildings under construction can present multiple problems because, besides the danger to nearby buildings from radiation and convection of heat, a spark-and-ember hazard may exist. Sparks can start fires at surprising distances from the original fire building. At times, they are drawn into buildings by fans in exterior wall openings on the lee side of the fire.

Officers should remember that hoists for materials are not intended to transport people. If possible and feasible, however, they can be used to transport rolled-up hose and other equipment to upper floors. Where elevators designated for fire-department use are required and provided, it is preferable to use them if the fire does not affect them. When such elevators have been installed, guards should be provided to operate them.

In some localities, standpipe systems are required under certain conditions, for example, when floors are in place above the seventh story, or more than 75 feet above the curb level. Quite often, however, these systems are not dependable at night because of carelessness about closing valves that have been opened during the day.

New highrise building construction has presented serious problems for the fire service, but in some respects it has one advantage: The buildings are erected more quickly because of the curtain wall construction, thereby reducing the time period of potential hazards that are inherent in buildings under construction.

Building Under Demolition

Much that has been said about buildings under construction applies to those under demolition. For example, the fire department may have trouble getting water to high fires if the standpipe system already has been put out of service but the structure is still 25 stories tall. Some builders, using modern techniques, just peel off exterior walls, remove undesirable partitions, and erect a new building on the metal framework of the old.

Dismantling sprinkler systems also can have disastrous results, as demonstrated on several occasions. A notable example was the Wanamaker fire, which originated in the building's subcellar in New York City. The building was in the process of demolition. The fire injured more than 200 fire personnel, did extensive damage to the subway system, and took several days to extinguish. A major cause of this disaster was the fact that the dismantled sprinkler system in the subcellar and cellar prevented the fire department from discharging water upon fire in accessible areas.

Occupancy

Human occupancy: An awareness of the mental, physical, emotional, or other relevant condition of the human element in various types of occupancies helps officers gage the severity of the life hazard and anticipate problems of rescue.

In nightclubs, churches, theaters, and so forth, the allowable occupancy may be so large, and there may be such density as to induce panic in the event of fire and smoke. Schools can present somewhat similar problems.

At inns, hospitals, and institutions for the care of infants, the elderly, the blind, the deaf, or other physically handicapped, occupants may have to be carried or led out of the building with unusual care.

In jails or mental hospitals, rescuers may have to contend with uncooperative, hostile, or generally difficult occupants, as well as cope with heavy locked doors, or cut through bars and windows.

Multiple-residential structures, particularly those of old, ordinary construction, often are overcrowded, at times by tenants who speak mostly foreign languages and therefore have difficulty in describing where other occupants are trapped.

Contents

Ventilation: Oils, fats, rubber, wax, tar, and some plastics produce large volumes of smoke, which may be unburned vapors. The heat from this type of smoke is low, as is its buoyancy. Visibility therefore is impaired, and ventilation is slowed down. Some materials give off gases that are toxic or injurious to the eyes or skin. Burning silks and woolens, for example, give off carbon dioxide and hydrogen cyanide gases. Both are toxic, and the skin can absorb the latter. Ammonia is also given off and cause injuries to the eyes, lungs, and damp skin areas.

Polyvinyl chloride (PVC) gives off chlorine gas and forms hydrochloric acid with water in eyes, armpits, groins, and wherever the human body perspires. Ventilation is achieved more slowly in such cases because firefighters must take time to don appropriate protective clothing and are hampered by poor visibility.

Where the presence of explosive mixtures or substances is suspected, exterior ventilation measures should be taken to prevent an explosion or minimize the results.

Placement of hoselines: Difficulty in ventilating can reduce the effectiveness of hoselines. Effectiveness also may be affected adversely by an excessive amount of contents and by the manner in which they are stored. Stock may be stored so high that it reduces the effectiveness of sprinklers and streams.

Where contents are combustible and plentiful, as in a lumberyard, rapid spread, high temperatures, and a spark-and-ember hazard characterize fires. To extinguish the main body of fire, heavy caliber and high-pressure streams are in order. Lighter mobile lines can cover the spark-and-ember hazard and finish the job.

In some cases, two occupied structures can be equally distant from and endangered by a fire in an unoccupied building. "Equally endangered" implies similar construction height, area, and so on. In such an event, the human element in the occupancy presenting the greater life hazard would be covered first. Thus, an endangered hospital would be given priority over a factory because many occupants might be able to walk from the factory fire.

Selecting an extinguishing agent: In some cases water will spread the fire. For example, gasoline, kerosene, and similar materials are lighter than water, will float on the top of it, and thus spread the fire.

Calcium carbide with water gives off acetylene gas and may cause an explosion. Some flammable liquids are miscible with water, and unless they can be diluted to a point at which flammability is no longer possible, the fire may spread.

Water used improperly in the presence of combustible dusts, such as wood, flour, zinc, or magnesium, may throw them into suspension and develop an explosive mixture.

The use of water near acid in carboys, such as wholesale drug occupancy, may cause failure of the carboys by sudden chilling or impact of the stream, permitting spread of the acid. The resulting release of gases may intensify and abet extension of the fire.

These examples are far from exhaustive. Chief officers should carry reference material to help them evaluate the occupancy factor in case of unusual hazardous flammables or chemicals require special extinguishing agent may be required. It is dangerous to depend on memory or the availability of competent advice.

Overhauling: The quantity of material involved, the manner in which it is stored, its nature, and the degree to which it has been subjected to the fire, affect overhaul. In addition, the degree to which contents have been subjected to fire and heat affects the amount of overhauling required.

Height

Ventilation: Height can affect activities at fires in highrise buildings. At lower-level fires, roof or window ventilation may be possible, thus facilitating the advance of lines from either side of the fire as well as the search for and removal of occupants.

Placement of hoselines: Exterior lines also may be used. In either case, control is likely to be established more quickly than at a similar but higher fire which can be attacked only from the interior. This earlier control tends to minimize the overhauling required at lower-level fires.

Area

If the fire can be confined to a small room, the fact that the total floor area is 200 by 200 feet hardly matters. However if such an area is not subdivided effectively and there is no small room, the fire sooner or later can spread to the total floor area.

If there is no life hazard, this development should make it logical to select confine, control, and extinguish as the major objective. The decision could be to operate from the exterior but not try to ventilate the roof, especially at supermarkets with wide roof spans.

The extent of fire--rather than merely the area of an occupancy, such as a lumberyard--influences the placement and use of hoselines.

Proximity of Exposures

Proximity alone does not make an exposure vulnerable. To evaluate the effects of proximity in selecting objectives and activities, it must be considered in conjunction with other contributing factors, such as construction, location of fire, occupancy, and wind direction and velocity.

Proximity is hardly a problem if the construction of both the fire and adjoining buildings feature exterior windowless walls with 4-hour fire-resistive ratings, assuming no inlets to air conditioning systems are exposed. On the other hand, inferior construction, with inadequately protected openings in intervening shafts or narrow courtyards, can intensify proximity hazards.

In evaluating proximity of exposures, special considerations always must be given to the factors of direction and velocity of wind. These factors can minimize the effects of proximity on the windward side of the fire and maximize those on the leeward side to such a degree that the building nearest the fire is not necessarily the one most severely exposed.

Structural Collapse

In assessing the effects of other factors on structural collapse, officers should consider carefully the type of construction involved in the fire. Non-fireproof or brick-joist construction usually is susceptible to collapse, and has presented some of the most serious problems.

Age of the structure intensifies structural defects. Duration of fire--how long has it been in progress and how much water has been poured into the building--location, and extent of the fire present obvious problems. Other

important considerations are conditions upon arrival, particularly where an explosion or backdraft condition is present, or where an explosion has already occurred; presence of heavy machinery; and the nature of the burning or exposed material.

Still other points to consider are proper supervision (overloading of stairs); the span of floor between supporting members (wide spans are more susceptible to collapse); and whether supporting metal structural members are protected. (They may fail rapidly if heated and then struck by cold water from streams, especially if they are made of cast iron).

In vacant buildings, officers can anticipate that floor beams have been weakened by vandalism and, quite often, by previous fires. Signs of imminent collapse are a rumbling sound that may accompany a wall disturbance or collapse, cracking or bulging walls, water or smoke seeping through the walls, twisted or warped columns and beams, and floors sagging or pulling out from walls.

Time Elements

Time of origin: Time of origin tells when a fire occurs, in terms of time of year, holiday time, and day or night. The time of year ordinarily reflects the usual seasonal tendencies relative to topography in woodland areas--humidity, rain, snow, and dry spells. Major holiday seasons maximize the hazards associated with churches and department stores.

Nighttime fires: Visibility is poor and it takes longer to evaluate factors that are pertinent in determining objectives and activities. The life hazard is maximized. At night fires in unoccupied buildings the selection of objectives and activities may be more difficult in borderline cases because of darkness. It is likely that these fires have been burning for some time before discovery, thereby worsening the effects of all related primary factors.

Consequently, night fires usually require more hose streams, apparatus, and personnel for control and extinguishments.

Daytime fires: The fact that occupants are awake can result in quicker discovery, alarm, and response with favorable effects on the life hazard, location, and extent of the fire on and after arrival, heat and smoke conditions, and exposure hazards. In ordinary weather visibility is good and fire officers can more quickly evaluate the primary factors pertinent to selecting objectives and assigning activities.

On the other hand, traffic conditions are heavier during the day, hydrants may be blocked, and pressure in the water mains generally is lower because of increased demand.

Auxiliary Appliances

Sprinkler systems: Long-term records show that automatic sprinklers either extinguished a fire or held it in control more than 96 percent of the time in a wide variety of occupancies. Reasons for unsatisfactory performance included water to sprinklers shut off, only partial sprinkler protection, inadequate water supplies, faulty building construction, and obstruction to distribution, hazards of occupancy, inadequate maintenance, antiquated systems, and slow operation.

Pressurization of stairways or other building areas: Internal systems may have this capability; therefore, building maintenance personnel knowledgeable about building systems should be brought immediately to the incident command post for consultation with the Incident Commander (IC).

Heat, Flame, Combustion

Heat transfer--radiation: Radiation is energy in the form of electromagnetic waves, which are traveling disturbances in space and which include light, heat, radio, and cosmic rays. The distance is the major consideration where structures are endangered by heat conditions. Consequently, proximity of exposures to the fire building in some cases determines order of priority in covering exposures, despite the direction of the wind.

The wind influences the situation, however, when it changes the direction of the convection current. Wetting down the exposed surfaces with water fog best protects exterior exposures against radiation.

Heat transfer--conduction: Conduction is the process by which heat is transferred within a material from one particle to another or from one to another in contact with it, without any visible motion. The amount of heat transferred by conduction varies with the conductivity of the material and the area of the conducting path.

Heat transfer--convection: Convection is the process in which heat is transferred by a circulating medium in the gas or liquid state. If the rise of convection currents in a shaft is checked by some obstruction, and if the stoppage is complete and sufficiently prolonged, a positive pressure will build up and will be greatest immediately below the stoppage.

Visibilty

Impaired visibility makes it more difficult to recognize and evaluate pertinent factors properly, thereby hampering decisionmaking and increasing the possibility of error. Poor visibility is a serious handicap in searching for trapped occupants, in determining the order in which exterior exposures should be covered, or in carrying out any fire activity.

In addition, supervision becomes a more critical matter because of the increased dangers to personnel.

Weather

The Effects on Objectives and Strategy

Low temperatures: Extremely low temperatures retard the initial development of fire, but once a fire has started they impair the efficiency of the operation in general in that they necessitate such things as heavy, encumbering clothing, which slows actions.

Frozen hydrants and appliances hamper operations. Snow accentuates the disadvantages of low temperatures.

High temperatures: High temperatures generally are classified as temperatures the eighties and nineties. High humidity and inversion conditions are characterized by dense smoke and poor visibility.

High humidity and high moisture content make it more difficult for a vigorous fire to become established, but do not slow its spread once it is well started.

Rain: Rain greatly reduces the probability of fire spreading from building to building.

Rain droplets cool convection currents and help extinguish flying sparks and embers.

Steaming sections of roof during a fire may indicate the location of hot spots, and is where openings should be made.

Wind conditions: Velocity is an important factor. Winds under 15 mph usually can be controlled if defensive measures are taken; with winds 15 to 30 mph, the rate of fire propagation increases dramatically. Thirty mph wind is a threat to exposures downwind, and is conducive to conflagrations.

The higher the velocity, the more the pillar slants from vertical in the direction of the wind, and thereby limits the need for other requirements. Chief officers should know the benefits and limitations of the effects of stream application. On the leeward side fog streams may be ineffective. Conversely, on the windward side high winds can make fog preferable when operating streams.

Firestorm: A firestorm may develop in the absence of ground winds sufficiently strong to support conflagration. Data from wartime experiences indicate that an area less than one square mile is probably incapable of sustaining a firestorm. In addition, building density (the total ground area of buildings divided by the total area of the zone) must be greater than 20 percent.

A firestorm is basically a windstorm. It may produce rain if the rising column of hot smoke meets a stratum of cold air, causing the moisture in the air to condense around particles of smoke or soot and fall in large black raindrops. To the fire service, however, the firestorm is comparable to a conflagration in size although different in other ways. It results from merging of numerous smaller fires into one massive inferno and is more likely to be a wartime, rather than a peacetime, phenomenon.

Minimum area and building density are essential, and absence of strong ground wind is necessary. The thermal columns (convection currents) rise almost vertically (that of a conflagration is bent over by the prevailing wind), and the rising column creates a powerful centripetal force that draws air along the ground at velocities that may exceed 100 miles per hour, toward the expansive low side-pressure area at its base. The true firestorm should not extend beyond its perimeter because of the centripetal pattern of the air currents created. High temperatures prevail, and combustible building material and plant life are consumed, with only brick and similarly resistant walls and charred trees remaining.

Requirements to Operate

The term **requirements to operate** pertains to the water, apparatus, equipment, personnel, and special extinguishing agents required and available for an effective fire operation.

All of these items form a balance. If, for example, the water supply required is available the need for additional personnel, apparatus, and so forth ordinarily is decreased. If water supply required is not available, the other needs ordinarily are increased. The same "rule" hold true for each of the other primary factors comprising requirements to operate.

Water: To use water most effectively and thereby limit the need for other requirements, chief officers should know the benefits and limitations of fog and additives, when and how to employ master streams, and the principles governing the use of hose streams, apart from the effects of ventilation, selecting hydrants, the mechanics of stretching hoselines, and so forth.

Advantages of fog: Fog can be used effectively with master stream appliances, with wetting agents, and also with foam. It has greater and quicker absorption of heat per gallon than plain water.

Water has its maximum cooling and extinguishing effect when applied as a cold fog and evaporated into steam. Fog causes less water damage to property and the contents of fire buildings. This has a favorable effect on the public, as the salvage problem is simplified and business can be resumed and homes reoccupied more quickly.

Disadvantages of fog: It has been proved many times that personnel are uselessly endangered and injured when they try to advance fog lines into seriously involved, unventilated fire areas; the steam created pushes back through the means of entry.

Unless ventilation can be effected to prevent such an occurrence, another technique must be used. Fog cannot be aimed as well as a solid stream. The latter can throw 75 percent of the water within a 10-inch circle or 90 percent within a 15-inch circle when it reaches the seat of the fire. Much of the water from a fog stream will not reach the seat of the fire if turbulent currents have to be overcome.

Under ordinary conditions, fog lines do not have a good vertical or horizontal range. This could be a disadvantage in extinguishment or in covering exposures. A serious disadvantage is that some firefighters do not realize that fog is no more a panacea than solid streams. It is important to know how to use each kind of stream to maximum advantage.

Chief officers who favor one technique for all fires have closed their minds to the possible alternatives. Officers should be familiar with all recognized techniques and should learn to select and apply the most appropriate one in each situation.

Placement and use of fog lines: In covering life hazard, extinguishing fires, and protecting exposures, the principles that govern solid streams are applied, bearing in mind the limitations and peculiarities of fog.

For example, when life hazard is present, the first line must of course be placed to operate between the fire and the endangered occupants or

between the fire and means of escape. However, keep in mind the possible effects on the occupants of the fog as it vaporizes to steam. Accordingly, where there is a life hazard, the use of fog attack is inadvisable.

Water with Additives

Advantages: There are greater penetrating qualities and less runoff, and consequently less water is required. It could be used with fog, resulting in greater heat absorption. In this form, it is particularly effective on some Class B fires involving high-flashpoint products.

It is effective on smoldering and hidden fires, as in baled cotton, paper, and rags; fires in sawdust or where charring might ordinarily repel water penetration; brush, grass, and duff fires.

It is estimated that one-fifth to one-third the usual amount of water will suffice when a wetting agent solution is used on such fire. It has a definite favorable effect on the overhauling phase of an operation, on preventing rekindling, protecting exposures, and reducing the life hazard for fire personnel.

Disadvantages: It is sometimes corrosive. It may increase the electrical conductivity of the stream. If electrical equipment comes in contact with wet water it must be flushed clean before it is restored to service. It should not be used with foam. The wetting agent breaks down foam. Its lower surface tension tends to increase the breaking up of a stream.

Foam

Mechanical: Foam is applied primarily to extinguish fires in flammable liquids by blanketing the liquid surface, sealing off the escape of vapors, insulating the liquid from the heat of the fire, and cooling the surface. Foam is effective on hydrocarbon fires that are liquid at ordinary temperatures and pressures, but cannot extinguish fire in liquefied compressed gases. Foam can be used for alcohols and esters.

Foams must have a lower density than the flammable liquid it is used on, so that the foam will float on the surface. The quantity of foam required for extinguishment varies widely. For fires in small indoor tanks of flammable liquids, a few inches may suffice; in larger outdoor tanks, several feet of foam may be required.

The amount of foam needed will be affected by (1) the required rate and time of application, and (2) the quality of the foam and the effectiveness with which it is applied.

Wetting-agent foams: They break down into their original liquid state at temperatures below the normal boiling point of water, and in this respect differs from mechanical foam. If a wetting agent of the synthetic detergent type is used, the structure formed can intercept and reflect radiant heat, and thereby provides effective protection for exposed surfaces of exposures.

The effectiveness of wetting-agent foams as a blanket on class B fires is limited because of the comparatively quick breakdown when heat is absorbed. However, the resulting liquid retains the penetrating qualities of the wetting agents and this aids in creating cooling action.

Surfactant foams: Surfactant means a **surface-active** material. The surfactant foam referred to, as "light water" is a fluorochemical material, and is described as a fluorinated surfactant. It produces aqueous film-forming foam when mixed with air, either in a foam pump or at an aspirating type nozzle.

Apparatus and equipment: Apparatus and equipment can be more effective if selected in accordance with the potential fire problem in the community as indicated by such primary factors as life hazard, possible location and extent of fire on and after arrival, heat and smoke conditions, exposure hazards, construction, height, area, auxiliary appliances, weather conditions, time of response, and naturally, the water, personnel, and special extinguishing agents available.

Apparatus and equipment obviously are more effective if they arrive at their destinations on schedule. Placement of apparatus is a matter of prime importance. One poorly placed apparatus can seriously impair the usefulness of others.

Misplacement is a particularly severe handicap at the start of an operation and should be guarded against when much of the assignment is approaching the fire from the same direction.

Tools such as electric-powered or hydraulic-powered tools, and imaging cameras should be used appropriately. Chief officers should understand the capabilities and limitations.

Protective clothing: Enforcing department policies by chief officers for wearing protective equipment appropriately, such as approved bunker gear, helmets, hoods, gloves, and breathing apparatus is critical to the safety of personnel.

Explosions

Backdraft or smoke explosions: Smoke explosions or backdrafts at fires essentially are caused by the rapid combustion of a mixture of flammable gas, vapor, mist or dust, and air. They can occur before or after arrival of the fire department. Smoke explosions or backdrafts can occur before arrival if heat breaks windows, abetting an inflow of air to an unventilated fire area in which active combustion has ceased because of oxygen depletion. The inflow of air replenishes the oxygen supply and can accelerate combustion of the accumulated smoke and gases with explosive results.

This also can happen after arrival if injudicious forcible entry supplies air to otherwise unventilated and susceptible fire areas. Smoke explosions or backdrafts can cause structural collapse. If they occur before arrival they can have an adverse effect on the life hazard, location, and extent of fire. After arrival occupancy, auxiliary appliances, smoke and heat conditions, exposure hazards, requirements to operate, duration of operations, life hazard for personnel, and street conditions can be affected, especially if there is frontal collapse.

If smoke explosions or backdrafts occur after arrival, the foregoing effects are intensified, especially for fire personnel who may be in the fire building or within range of collapsing walls. In some cases, the first explosion throws flammable dusts into suspension causing additional explosions.

A cardinal principle is that any enclosed and inadequately ventilated fire area should be considered susceptible to a smoke explosion or backdraft. If the fire building is unoccupied, such areas should not be entered until they are ventilated.

Bomb explosions: Sporadically, certain groups explode bombs as a means of "sending their message." Warnings of the impending explosion may or may not be given. Chief officers responding to the designated target must assume the warning is authentic and conduct operations accordingly.

If the suspected building is occupied, it should be vacated immediately. Fire personnel can assist in the evacuation but should not participate in searching for the bomb, since they have neither the protective equipment nor the special training required for such a task.

Topography

Hilly communities: When operating at a fire on steeply graded streets, it also may be advisable to position aerial trucks or tower ladders on the high side of the fire to ensure maximum reach. The effective use of wedges to level portable ladders to allow for safe climbing on hilly terrain must be enforced.

Exposure Hazards

Covering interior exposures: The interior exposure hazard, depending on the degree of severity, can affect life hazard favorably or unfavorably. Also affected are extent of fire after arrival, occupancy (human element and contents), structural collapse, heat and smoke conditions, wind direction and velocity, requirements to operate, duration of operation, smoke explosion or backdraft, and exterior exposure hazard.

Covering exterior exposures: Exterior exposure hazards concern buildings or occupancies that may be endangered by the original fire. Occupied exposures may create a life hazard or intensify the one already present in the original fire building, thereby increasing the risks that may have to be taken by personnel in rescue work. The existence of a life hazard can have detrimental effects on many other primary factors.

Interior and exterior exposures hazards are affected by the same primary factors, except that the exterior exposure hazard also can be affected by the proximity factor.

Duration of Operations

For one reason or another, fire operations of long duration generally are difficult to deal with from the beginning. They may feature heavy involvement and structural collapse, especially if the structure is old and the contents are water-absorbent.

They may maximize the exposure hazard and cause other fires if sparks or embers created by structural collapse are carried by the wind. They indicate that auxiliary appliances such as sprinklers are absent or ineffective, and usually necessitate more than the usual requirements to operate.

STREET CONDITIONS

The Effects on Objectives and Strategy

Streets that are one way, are congested by vehicular traffic, or are covered by snow or ice tend to delay response of the fire department. Under such conditions, fires are likely to be more extensive than usual on arrival, intensifying the existing hazards. Ice-covered streets can slow down the movements of personnel.

Canopies, overhead wires, and tree-lined streets can handicap efforts to use portable, aerial, or tower ladders. The width of the streets naturally has a bearing on proximity of exposures and therefore on the exterior exposure hazard.

Piers, dead-end streets, and buildings facing only one street, restrict avenues of attack. Steeply graded streets can affect the placement of apparatus. The danger of falling glass from involved highrise buildings has added a new and sizeable dimension to the problems of the fire service.

Some communities convert a main thoroughfare into a mall with sidewalk cafeterias and extensive garden trimmings. This creates considerable problems for the fire and rescue efforts.

THE COMMAND SEQUENCE CYCLE

Critical factors of incident operations often are overlooked (or not given enough emphasis. This problem can result in poor use of resources, inappropriate strategies and tactics, safety problems, high incident costs, and lower effectiveness.

A simple (but thorough) process for planning can be used for small, short-term and long, more complex incidents and events. This process is referred to as the Command Sequence Cycle and consists of six sequential steps used to develop the Incident Action Plan (IAP).

The Incident Action Plan Cycle

The first of these steps can be done by the IC or at a formal planning meeting. The last steps ensure that the plan does its intended job. These steps follow:

1. Understanding the situation.

2. Establishing incident objectives.

3. Developing incident strategy.

4. Tactical direction and resource assignments.

5. Implementing the plan.

6. Evaluating the plan.

Understanding the Situation

In general, the essential information needed to understand the situation fully consists of:

- what has occurred;
- whether or not the incident will get bigger (or smaller); and
- present (and future) resource and organizational needs.

Incident Objectives and Strategy

Example: Occupied house fire.

Two-story occupied dwelling, fire located living room area first floor, Side D, report of occupants trapped in second floor bedroom, Side B. No external exposures.

Objectives

Safe removal of occupants.
Contain and control fire to room/building of origin.

Strategies

Example of strategies for objective: Safe removal of occupants.

Strategy #1: Rescue occupants.

Strategy #2: Confinement.

Strategy #3: Ventilation.

Tactics

For the rescue strategies the tactics might be

Tactic #1: Deploy search/rescue group to upper floors.

Tactic #2: Deploy one 1-3/4-inch hoseline to first floor for stairwell/ occupant protection.

Tactic #3: Ventilate stairwell (if possible) and Side B to support occupant removal.

Strategies

Example of strategies for objectives: contain and control fire to room/ building of origin.

Strategy #1: Confine/Extinguish.

Strategy #2: Ventilation.

Strategy #3: Salvage.

Tactics

For the confine and extinguish strategies the tactics might be

Tactic #1: Deploy one 1-3/4-inch hoseline to first floor Side D for confinement/extinguishment.

Tactic #2: Deploy one 1-3/4-inch hoseline to second floor Side D for interior exposure protection.

Tactic #3: Vertical ventilation of roof apertures and horizontal ventilation first and second floor.

Alternatives

Tactic #4: Positive ventilation with proper use of fans.

Tactic #5: Use of salvage covers and control of water runoff.

Developing Tactical Direction(s) and Making Resource Assignments

Tactical direction includes determining the tactics and operations necessary for the selected strategy and determining and assigning appropriate resources. The tactical direction is developed around a specific operational period and must have measurable results.

For large incidents that may last for some time, there is a limit to what may be achieved (in terms of accomplishing an incident objective in a **single** operational period). Therefore, tactical directions should be stated in terms of accomplishments that can be achieved realistically within the timeframe of an operational period.

Resource assignments will be made for each of the specific work tasks. These assignments will consist of the kind and number of resource needed to achieve the tactical operations for each operational period.

If resources are not available for a specific tactical operation, then the IC may need to prioritize tactical assignments or reassess the tactics (and perhaps the overall strategy).

Implementing the Plan

The IC/Company Officer (CO) should communicate the appropriate tactical assignments to incident resources via radio or face to face. The IC should ensure that the tactical assignments are understood clearly by the resources assigned and that they are facilitating the strategy developed to meet the overall incident objectives.

Evaluating the Plan

The IC/CO should evaluate the effectiveness of the IAP continually to meet the overall incident objectives. This evaluation should occur every 10 minutes while operating under emergency conditions at an incident. Fireground conditions can change very rapidly during emergency operations, and fireground commanders must evaluate the effectiveness of the IAP continually.

UNIT 3: FIRE CONFINEMENT, EXPOSURE PROTECTION, AND FIRE EXTINGUISHMENT

OBJECTIVES

The students will:

1. *Select and deploy the appropriate hoselines to accomplish fire confinement, exposure protection, and fire extinguishment.*

2. *Using the command sequence cycle, develop a confinement action plan based on the incident presented.*

3. *Using the command sequence cycle, develop an exposure protection action plan based on the incident presented.*

4. *Using the command sequence cycle, develop a fire extinguishment action plan based on the incident presented.*

5. *Identify and explain the actions required to support fire confinement, exposure protection, and fire extinguishment activities.*

DEFINITIONS AND PRINCIPLES

Fire confinement tactics are those actions taken to confine a fire to a given area of present involvement by preventing the spread of the fire into any uninvolved area.

Fire extinguishment tactics are those actions taken following fire confinement to extinguish a fire by removing the fuel, air supply, or, most commonly, the heat.

Exposure protection is the tactical operation preformed to protect exposed property and areas near the fire from becoming involved.

The most basic principle of fire confinement is to keep the fire from extending into unburned areas. Once fire confinement has been accomplished, the next step is to extinguish the fire. Often this will be accomplished by the same hoseline and will appear to be a simultaneous effort.

Many structures have been equipped with fixed fire protection equipment to confine a fire, extinguish a fire, or make it easier for fire suppression personnel to apply water to a fire by placing a reliable water supply in stairwells at each floor. As fire officers, we must provide for the support and proper use of this equipment as part of our tactical operations.

A fire will require several tactical assignments, and all tactical assignments must be closely coordinated with other Company Officers (CO's) and the Incident Commander (IC). A CO given a tactical assignment of fire confinement or extinguishment also may be supporting other assignments, such as primary search; similarly, other tactical assignments, such as ventilation, may be supporting confinement and extinguishment. Close coordination of all tactical assignments is one of the management tools for a smooth and successful conclusion to a fire.

FIRE CONFINEMENT TACTICS

When given a tactical assignment for fire confinement, the CO should be clear on why fire confinement was assigned. If the purpose is not clear, he/she must ask the IC to clarify it. One typical fire confinement assignment may be to provide support for a search or rescue effort. Given this assignment, the CO should position the hoseline to protect the means of egress, such as stairways and hallways, for the rescue team. Of particular concern when supporting a search effort is the potential for a flashover; the hoseline can be used effectively to stop the buildup of heat that precedes flashover.

Another tactical assignment for fire confinement may result when resources are not adequate to initiate an inside attack (offensive) and it may be necessary to initiate an exterior attack (defensive) until more resources arrive. A third assignment for fire confinement may be to save the unburned portion of a structure by confining the fire to the burning portion. This usually occurs when it is unsafe to initiate an extinguishment effort, or when resources are not adequate to accomplish fire extinguishment.

Sizeup for Confinement

Sizeup for fire confinement includes several considerations. The first consideration is determining the location and extent of the fire: where is the fire now, where is it going to go, and who or what is in its way? Building construction classification and occupancy may provide a clue to floor plan and/or potential problems, such as a structural deficiency. The fire flow requirements to accomplish the assignment must be evaluated, and maximum gallons per minute (gpm) from available resources must be identified.

It is also important to consider the lead-time required to place the hoselines in operation. It does no good to finally get a hoseline in position only to find that it was 5 minutes late and the fire has passed your location. Another sizeup factor is the presence of fixed suppression equipment such as sprinklers or standpipes. The presence of sprinklers may indicate that the fire likely will be contained or extinguished, while a standpipe will provide a reliable water supply at the upper floors of the structure. The number of personnel available to complete the assignment will dictate the size or number of hoselines that can be placed in service in a timely manner.

It is critical to coordinate fire confinement with other tactical operations, such as primary search, ventilation, forcible entry, other hoselines, and the placement of ladders. Some tactical assignments, such as primary search, will be dependent on your ability to confine the fire, and the success of the fire confinement assignment may also be dependent on other tactical assignments, such as ventilation or the placement of ladders.

Selection of Hoseline and Nozzle for Fire Confinement

The selection of a hoseline and nozzle should be made after several factors are considered. The first consideration is the amount of water that must be produced to overcome the heat produced by the fire. Once the fire flow requirements are determined, it is important to view the fire apparatus as a

toolbox that contains several tools for water application; it is the CO's responsibility to select the most appropriate tool. Yesterday's fire may have been extinguished successfully with a 1-1/2-inch line with a fog nozzle that was flowing 100 gpm, while tomorrow's fire may require a 2-1/2-inch line with a straight stream-smooth bore nozzle flowing 250 gpm. Depending on the structure's configuration, size, and fire involvement, hose stream reach and cooling ability may be critical to stopping and extinguishing the fire. Smooth-bore nozzles flowing higher gpm have the ability reach further and cool more.

Some additional considerations should be the maneuverability attainable by the available personnel, and the ability of the hose to supply the water that the nozzle will require. Small hoselines (1 inch or less in diameter) are easily maneuverable, but have very limited water-flow capabilities. Medium size hoselines (ranging from 1-1/2 to 2 inches) have flow rates in excess of 100 gpm, but require more personnel to place in operation than do the small lines. Large lines are generally 2-1/2 to 3 inches in diameter, have flow rates in excess of 200 gpm, and are hard to move once charged. Unfortunately, the fire doesn't care how many personnel you have, how tired you are, or what hoseline you normally use. It will only react when you can apply water to the seat of the fire and absorb more heat than it is producing. It is the CO's responsibility to select the correct tools to deliver the desired fire flow. In any event, the hoseline selected must be long enough to reach the seat of the fire or the area to be protected plus an additional 50 feet of hose for maneuverability.

Another critical decision is the selection of the nozzle for the application rate and the most effective pattern of water application. A straight stream-smooth bore nozzle is ideal when long reach and penetration is required, e.g., for a building that is not compartmentalized into small and manageable areas, such as a high school gymnasium. Water from ineffective hoselines may turn to steam long before it reaches the seat of the fire, and if the water does not get into the seat of the fire and absorb the heat at that location, the fire will continue to burn. Water must be applied at the seat of the fire and, when operating in large open areas such as school auditoriums, grocery stores, and office buildings, the straight stream nozzle may be the best choice for water application.

When the fire building is compartmentalized into manageable areas for fire extinguishment, such as a dwelling, the fog nozzle is an excellent choice. The smaller the drops of water leaving the nozzle, the more surface area is created for each gallon of water and the more heat can be absorbed.

Like hoselines, nozzles are tools on the fire apparatus and it is important to use the toolbox approach to select the correct tool for the job. Yesterday's bedroom fire may have been best handled with a fog nozzle, and

tomorrow's supermarket fire may require a smooth bore-straight stream nozzle. The selection of the correct tools is one of the most important decisions that a CO will make at any incident scene.

Hoseline Placement

Once the hoseline and nozzle are selected, the next critical decision will be the placement of that line. The objective of the assignment will determine the best hoseline position. If the IC has not been clear in the assignment objective, ask for clarification. There could be a significant difference between where a line is put into operation for supporting a primary search effort and where a line is placed to protect from the extension of fire into an adjacent part of the structure.

Hoseline placement for fire confinement to support search and/or rescue generally follows several principles: placing the first hoseline between the fire and the victims and/or rescue team; protecting vertical openings, such as open stairwells; protecting hallways from fire extension; and protecting the rescue area from flashover or rollover. When the assignment is completed, back the line out. If conditions deteriorate and the rescue team has left, back the line out. Never abandon your hoselines, since you may need the protection of the water before you can get your confinement team out.

Hoselines also will be used to prevent further destruction by being positioned to confine the fire to the burning area. This requires determining the best point to enter from the unburned side, and moving to the position where the progress of the fire is to be stopped. This may include hallways, crawl spaces, or other voids where it has been determined that the forward progress of the fire must be stopped. It is extremely important to provide for a backup line to protect the confinement line, and a safe means of egress for the personnel.

Type of Line	Size	Characteristics			
		Fast	Mobile	Volume	Reach
Medium	1-1/2" to 2"	Yes	Yes	Medium	Medium
Large	2-1/2"	No	No	Large	Medium to Long

In some situations the only viable option is to initiate an attack from the burning side. Buildings such as row houses, mercantile row buildings, or areas with only one available means of access can force a direct attack on the fire rather than an attack from the unburned side. All options, such as going through a neighboring structure or returning into the rear of the burning structure, must be considered. Initiate a frontal attack only as a last resort, when no other options are available.

Coordination

All fire attack operations must be coordinated with ventilation. If possible, ventilation should be accomplished just prior to the initial fire attack. This will allow a place for the heat to be released from the structure, and will allow the steam that is generated a place to be released. In addition, safety will be enhanced by improving visibility and, at the same time, reducing the potential of flashover. Other considerations include getting a backup line in position as soon as possible and pushing the fire back to its area of origin. Remember, the fire has the potential for extension on six sides.

EXPOSURE PROTECTION TACTICS

Use exposure protection tactics to keep any property not involved in fire from becoming involved. Exposures can be classified as buildings near the fire building, buildings attached to the fire building, areas near the fire but protected by firewalls or divisions, and areas downwind that may be threatened by flying brands.

Protect Vulnerable and Valuable Exposures

Officers often must prioritize which exposure should be protected first. Prefire planning is essential to assist in determining vulnerable and valuable property. The CO must keep in mind that the values of each individual at the scene may vary. When prioritizing, the CO must determine which tactics will have the most favorable outcome regarding what can be saved.

One of the factors used in prioritizing potential exposures is the amount of radiant heat being produced and distributed. The amount of heat is proportional to the type of fire. There are three types of fires: 1) point source, 2) line source, and 3) area source. Point source fires are very small, localized fires, such as an object or a single room and contents. Line source fires involve larger areas, including walls and several rooms,

and also include brush fires and running flammable liquids fires. Area source fires include totally involved structures, including exterior walls, and major wildland fires with crowning.

The concept of protecting interior exposures is to keep areas away from the fire (but in the fire building) from becoming involved with fire. These areas generally are divided from the fire by walls. The greater the fire rating, the more protection the exposure has from becoming involved, but just because an area is separated from the fire by walls does not mean it cannot become involved. The CO must take a proactive approach to exposure protection. Protecting valuables such as computers, important records, stock, and machinery will have a very favorable outcome. Uninvolved areas must be protected.

Separate buildings, whether attached to the fire building or not, are classified as exterior exposures. When assigned to exposure tactics the CO must determine if such buildings are a threat. Generally, a building up to 30 feet from the fire is classified as an exposure. A building 30 to 100 feet from the fire may be an exposure, and a building more than 100 feet from the fire is not an exposure. The CO cannot base all decisions on this rule of thumb; also consider carefully what is burning, the amount of radiant heat being produced based on the source of fire, and weather conditions. Wind also is an important factor in determining potential exterior exposures.

Tactics for Protecting Exposures

Tactics needed to protect exposures:

- Coordinated attack on fire with adequate flow is the best way to protect exposures.
- Wash the face of exposed buildings with water to prevent ignition of exposed surface areas by reducing the amount of heat absorbed. Water curtains are inefficient in preventing transfer of radiant heat and they should not be used.
- Push the fire back into the original area to prevent extension to exposures.
- Reduce the intensity or extinguish fire at the points where heat transfer is threatening exposures.
- Place ventilation holes where the change in convection currents will draw fire away from exposures.

- Stretch lines to inside of exposures to cover possible internal outbreak of fire.

- Charge sprinkler system of exposure, if available, so that the system is not overwhelmed if fire extends into the exposure.

Brand Control

Fire involving wildlands, resulting from the combustion of grass/wood materials generally produces small particles of burning material called brands. Building fires also may produce many flying brands, e.g., tobacco and hay barns, or large wooden structures that are well involved. One of the most probable brand producers always has been a wood-shingle roof.

These brands are carried by air currents to places downwind of the original fire. When they land, they can ignite other combustibles, thereby spreading the fire. If the fire is producing brands, exposure tactics are initiated to prevent the external exposures downwind from becoming involved. Based on the size of brands and weather conditions, several exposures may be threatened. Personnel must be assigned to monitor rooftops near the fire and as far downwind as needed. Personnel assigned must report conditions found to the IC, and must be prepared to extinguish any brands encountered.

Support

In addition to implementing exposure tactics, other supporting tasks must be addressed. Fire crews must gain entry to exposure areas and buildings; crews may have accessibility problems, both internal and external; and buildings may have to be laddered to gain access to the roof. Not all areas or buildings are easily accessible. The CO must consider how personnel and equipment will be moved and set up to best protect the equipment.

Tactical Sizeup Considerations

When completing a tactical sizeup for exposure protection, the CO must ask the following questions:

- Is the operating position outside of the collapse zone?

  All operations must be set up outside of the collapse zone.

  A collapse zone is a distance at least equal to the height of the building measured on the ground horizontally out from the base of the wall.

- What fire flow is available for exposure protection?

  If water supply is not adequate, streams can be directed on the fire and on the exposure alternately, but avoid directing too much attention at the fire and too little at the exposure.

- What tactics are most appropriate to accomplish exposure protection?

- What number and size of hoselines or appliances are required for exposure protection?

- Where should lines or appliances be placed?

- Is any support required?

- What coordination with other tactics is needed?

- What safety concerns exist?

- How effective is the exposure protection effort?

Coordination

There must be considerable coordination between exposure tactics and other tactics being implemented at the fire. Proper ventilation can have a major impact on exposure protection by channeling heat, smoke, and fire away from exposures. On the negative side, ventilation openings often threaten potential exposures. Coordination between ventilation crews and exposure crews reduces the chance of tactical errors.

There must be coordination in the use of water so that adequate water is available for both exposure protection and fire confinement and extinguishment.

Often, protecting external exposures calls for the use of high water flows and master streams. Maintain coordination to assure there are no opposing hoselines and that the streams being used do not endanger firefighters by pushing objects on them.

FIRE EXTINGUISHMENT TACTICS

The purpose of the tactical assignment for fire extinguishment is to stop the combustion process. This is most commonly accomplished by bringing the temperature of the burning materials below their ignition

temperature by absorbing the heat with water, resulting in fire extinguishment. This tactical assignment should include a geographic location of where the fire is to be extinguished. For example, the assignment may be to extinguish the fire on the second floor of a dwelling, to extinguish the fire in the south wing of the high school, or to extinguish the fire in the basement of the shoe store.

Sizeup for Extinguishment

When given an extinguishment assignment, one of the first steps must be to conduct an extinguishment sizeup. This sizeup process should include determining the location and extent of the fire: where is the fire now? where is the fire going? and who or what is in its way?

The risk to the personnel assigned to extinguishment also must be evaluated against the benefit that is expected. Extinguishing a fire on the third floor of a highrise office building to protect the lives of the people above the fire floor may be viewed differently than sending personnel into a vacant structure that is suspect for early collapse. The greater the risk, the greater the need for the management of safety with items such as backup lines and ventilation.

Evaluate areas of access and egress and select the most appropriate for hoseline advancement into the structure. Evaluate the building for its construction classification, since this may provide valuable insight as to how the fire may spread, anticipated floor plans, and potential problems. Consider all structural deficiencies in determining the risk/benefit evaluation.

Nozzle Selection

The selection of nozzle(s) should be appropriate for the fire area and be able to produce the fire flow required. At many fire incidents, multiple lines may be necessary to accomplish this goal. If unsure of the correct size hoseline to initiate, select the largest hoseline you can advance with the personnel available. It is better to be 100 gallons over what is needed to put the fire out than 100 gallons short. Remember that straight stream nozzles have a much better reach than fog nozzles, while fog nozzles produce much smaller drops of water and absorb heat faster than straight stream nozzles. Nozzle selection is an important step in preparing for successful fire extinguishment and should be considered carefully.

Hoseline Selection

The hoseline selected should reach the seat of the fire with at least an additional 50 feet available, and should be large enough to accommodate the flow requirements of the nozzle that will be attached. Typically, fire apparatus will be equipped with small, medium, and large hoselines. The selection of the correct line is an important step in preparing for a successful fire attack.

Hoseline Position

Positioning hoselines for extinguishment is similar to the procedure for fire confinement. Select the available areas of access and egress, and initiate the attack from the unburned side when possible. If the fire is in the front, attack from the rear. If the fire is located in the rear of the structure, attack from the front.

Fires below grade require special consideration for safety and ventilation. Fires on upper floors may require an attack from below before moving upward. In some situations, windows on upper floors also can be considered for hoseline access and ventilation. Occasionally, reducing the fuel, e.g., closing a valve on a flammable liquid line that is feeding a fire, or controlling the building utilities or closing the gas supply valve can control the fire load.

The position for backup lines should be selected as carefully as the position for the attack lines, and the backup lines should be of the same size as the attack lines or larger. All efforts must be made to eliminate opposing hoselines, which can occur if the placement is not carefully planned. The backup line should be placed into service as soon as possible after the attack line(s) are initiated and, if possible, should originate from a separate water supply.

Coordination

Fire extinguishment must be coordinated with all other tactical assignments. Since extinguishment efforts are best if initiated after ventilation, it is imperative to coordinate with the ventilation team. Premature ventilation before hoselines are in position may result in extensive fire spread. Delayed ventilation may keep the fire area untenable because of the heat, and may make the extinguishment efforts ineffective. Coordination of ventilation and fire attack is extremely important to the success of fire extinguishment.

Fire extinguishment also must be coordinated with forcible entry. If the extinguishment team is expected to provide for its own forcible entry efforts, this should be clarified prior to entry so that the team can carry the proper tools.

Ladders may be required to advance hoselines into upper floors for fire extinguishment, which will require the person in charge of fire extinguishment to coordinate with the person in charge of laddering. If there is no one assigned to laddering, the fire extinguishment team may have to provide its own ladders for fire extinguishment. Many IC's will require that ladders be placed as a routine part of the incident management. The extinguishment team should note ladders being raised, as they may be needed to provide a secondary means of egress in an emergency.

Lighting is another important part of an incident, especially during nighttime hours. Coordinating extinguishment efforts with lighting efforts will make the incident scene safer, and it will make it easier for the extinguishment team to seek out areas of hidden fires and complete its assignment.

Safety

The CO must consider the safety of the personnel given the tactical assignment of extinguishment. The extinguishment team will be extremely vulnerable to injuries as it will be in the hottest part of the structure, the portion of the structure that is the most vulnerable to collapse, and at the greatest risk for flashover. If the IC has assigned a safety officer, the CO should inform that person where he/she will be making entry and the area where the extinguishment team is expected to be operating. This is important should an unanticipated problem occur which requires assistance. Remember: under the Incident Command System (ICS) if the IC does not implement the Safety Officer position and staff it, the IC **is** the Safety Officer in addition to Command. The most important responsibility of a CO is to manage the safety of the crew.

SUMMARY

The tactical assignment for fire confinement is intended to stop the progress of a fire for a specific purpose. Fire confinement may be used to provide time to conduct a primary search, as a defensive action until additional resources arrive to initiate an offensive operation safely, or as a method of preventing fires from extending into unburned portions of the structure or exposures.

The tactical assignment for fire extinguishment is intended to bring the fire under control by reducing the temperature of the burning materials below their ignition temperature and stopping flame production (combustion). Successful accomplishment of this assignment requires matching the water application rate with the amount of heat being produced by the fire. This is done by selecting the appropriate size hoseline and nozzle. Some flow requirements may require multiple lines working together to accomplish the desired flow rate. The attack lines, if possible, should be positioned so that the fire attack is made from the unburned side. Backup lines always should be deployed to assist with extinguishment and to provide a measure of safety should something unplanned occur which may jeopardize the safety of firefighters.

When a structure has been equipped with fixed fire protection equipment such as sprinklers and standpipe systems, the CO should understand how they work, how they can be supplemented with water, and how to use their capabilities to the utmost. The building owner may have invested considerable resources to protect the structure or make fire suppression work easier, and the CO should be fully prepared to make the best use of the devices that were installed.

Coordination of all tactical assignments is critical to a successful outcome. The tactical assignment of fire confinement may be in support of other assignments such as primary search. Similarly, a fire extinguishment assignment will be supported by other tactical assignments, such as water supply and ventilation. Coordination of all tactical assignments is critical for a timely and safe fire incident operation.

Fire confinement and fire extinguishment are two of the most critical tactical assignments at a fire incident. A successful CO will understand how his/her assignment fits into the overall strategy, conduct a sizeup to determine what must be done to accomplish the assignment, determine what tools are best suited to the assignment, evaluate the safety of personnel, and develop a plan to accomplish fire confinement and extinguishment safely.

ACTIVITIES

Fire Confinement Command Sequence #I
100 Block A Street

Sizeup Report of Fireground Conditions

Initial Report

- Exact location and conditions as observed.
- Size of structure--stories and dimensions--type of construction--occupied or vacant.
- Smoke/Fire--location and density.
- Status of occupants--if known.
- Exposures--Sides A, B, C, D or other.
- Engine _____ is establishing _____ Street Command.

Subsequent Report

- Information not immediately reported and/or information developed upon investigation--to be given ASAP or within 5 minutes.

Progress Report

- To be given by the Incident Commander (IC) every 10 minutes until fire is under control.

Fire Confinement Command Sequence #I
100 Block A Street
Plot Plan

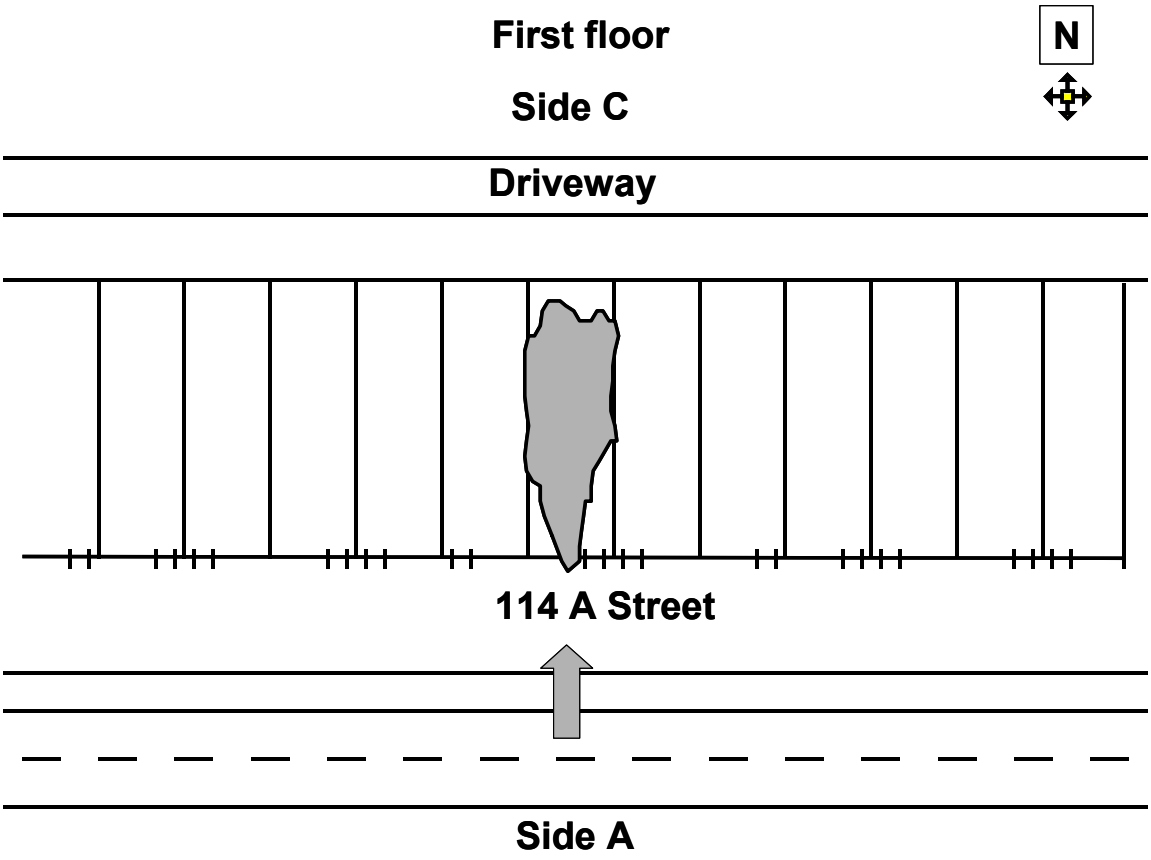

Activity 3.1

Fire Confinement

Purpose

To learn where to use the command sequence cycle to develop an action plan for fire confinement for selected occupancies.

Directions

1. The class will be divided into table groups.

2. There are three scenarios for fire confinement.

3. A floor/plot plan is in the Student Manual (SM) for each occupancy. The floor/plot plans show the amount of involvement in the building.

4. You will be shown several slides of the building's dimensions, resources available, and one slide showing smoke and/or fire.

5. The instructor will assign one scenario to each group. Look at your floor/plot plans for the scenario.

6. Each group will develop a fire confinement action plan using the command sequence cycle for its assigned scenario. Use the Primary Factors Chart and complete the Student Activity Worksheet.

7. Groups will be required to report back to the class their action plans using the command sequence cycle.

8. Each group has 10 minutes to complete its assignment.

Activity 3.1 (cont'd)

Scenario 1

246 10th Street

Building Description:

21' x 50', three-story, Type III, ordinary construction.

Occupancy Type: Office building.

Connected to a three-story warehouse and two-story warehouse both of ordinary construction.

Fire Location: 246 10th St.

Fire is on the second floor at the rear of the office building. All occupants have been removed. Involvement is approximately 35 percent.

Time:

1000 hours.

Water Available:

Hydrant area--hydrants at every corner, system flow = 8,000 gpm.

Resources Available:
E-1
E-2
E-3
T-1
SQ-1
BC-1

Staffing:

Four Firefighters per apparatus.
Battalion Chief 1: 30-minute response.

Floor Plan

Fire on Second Floor--Two-story and Three-story Connected Buildings

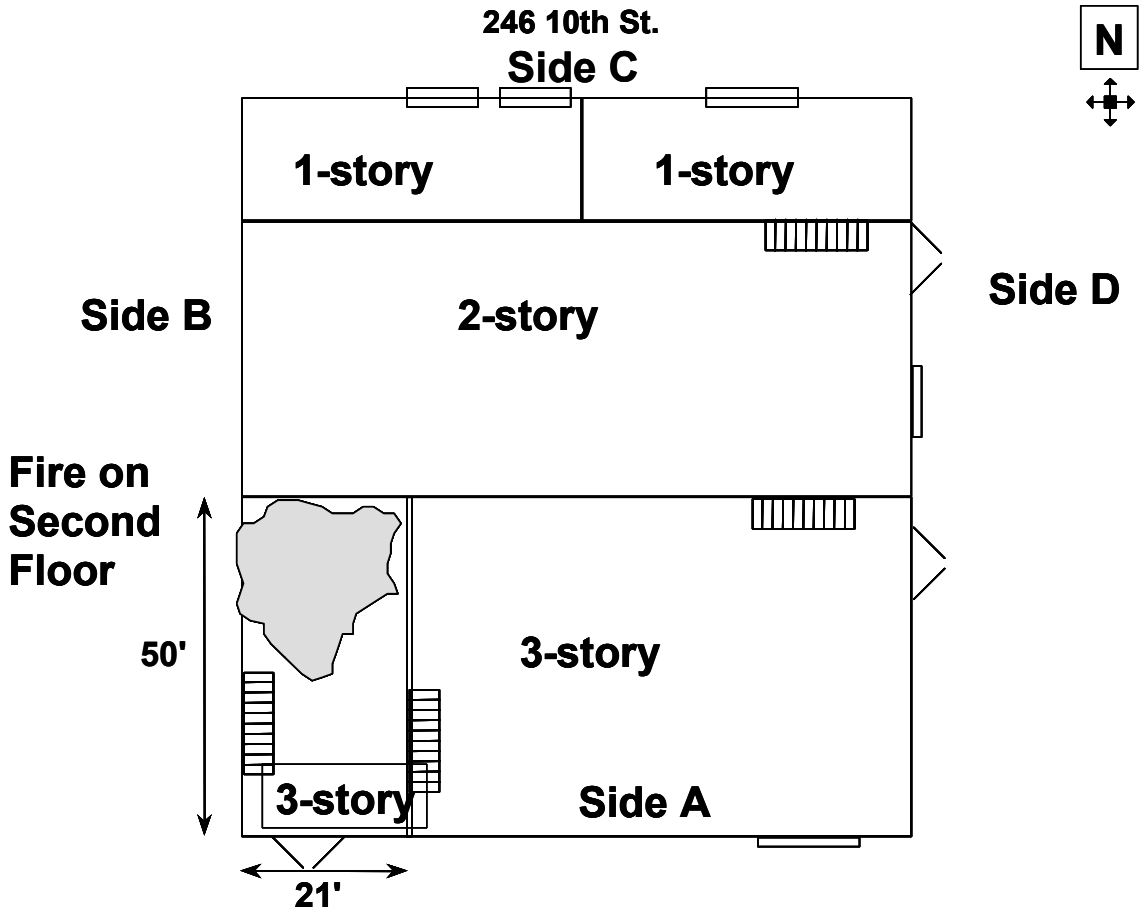

Column #1 Primary Factor Size-Up Chart		
Pertinent Factors (P)	(Check appropriate boxes)	P
Life Hazard	Occupants	
	Firefighters	
Location/Fire	Fire Bldg/ Exposures on Arrival	
	After Arrival – Burn Time	
	Radiation/Conduction/Convection	
Construction	Fire Building	
	Exposures	
Occupancy (Contents)	Fire Building	
	Exposures	
Height	Fire Building (Front/Rear)	
	Exposures (Front/Rear)	
Area	Fire Building/Configuration	
	Proximity of Exposures /Config.	
Structural Collapse	Fire Building	
	Exposures	
	Collapse Zone	
	Apparatus Placement	
Weather	Visibility	
	Temperature/Humidity	
	Wind – Direction/Velocity	
Resource Requirement	Apparatus/Personnel/Equipment - RIC	
	Water Supply/Suppression Agent	
Auxiliary Appliances	Fire Building Supplied	
	Exposures Supplied	
Topography	Street Conditions	
Explosions/ Back Draft	Flash Over Conditions	
Time	Duration of Operations (Rest-Rehab) Time of Day Time of Alarm	

Column #2 Incident Objectives Attainable/ Measurable/ Flexible

Examples of Incident Objectives:

- Safe Removal of All Occupants.
- Contain and Control Fire to Room/Building of Origin.
- Contain, Control and Limit Fire in Exposures.
- Other.

List Incident Objectives:

1. _____
2. _____
3. _____
4. _____
5. _____
6. _____
7. _____
8. _____
9. _____
10. _____

Column #3 Activities (Strategies)

[R] Rescue
- Interior/Exterior/Both

[E] Exposure Protection
- Exposure Examination

[C/E] Confinement/Extinguishment
- Hose Line Replacement

[O] Overhaul
- Expose Hidden Fire

[V] Ventilation
- Removal of Occupants
- Fire Control

[S] Salvage
- Water – Run-Off
- Apply Covers

Forcible Entry
- Location
- Method

Special Equipment
- Imaging Cameras

List Incident Strategies	Assign To:
1.	
2.	
3.	
4.	
5.	
6.	
7.	
8.	
9.	
10.	

Column #4 Evaluate Effect of Activities (Strategies) Every 10 Minutes

Effective	Ineffective

Identify alternative strategies for firefighter safety when occupant safety has been determined not to be a Primary Factor.

- _____
- _____
- _____
- _____
- _____
- _____
- _____

Command Sequence Cycle:

Sizeup:

Objective(s):

Strategy(ies):

Tactics:

Implement:

Evaluate:

Scenario 2

122 M Street

Building Description:

50' x 90', three-story, Type V, wood-frame construction.

Occupancy Type: Garden apartment complex.

One section, four apartments per floor--total 12 apartments.

Fire Location: 122 M St.

Fire is in the third floor rear apartment. Involvement is approximately 50 percent.

Time:

0700 hours.

Water Available:

Hydrant area--hydrants at every corner, system flow = 2,500 gpm.

Resources Available:

1st Alarm:
E-1
E-2
E-3
T-1
SQ-1
BC-1

Staffing:

Four Firefighters per apparatus.
Battalion Chief 1: 30-minute response.

Plot Plan

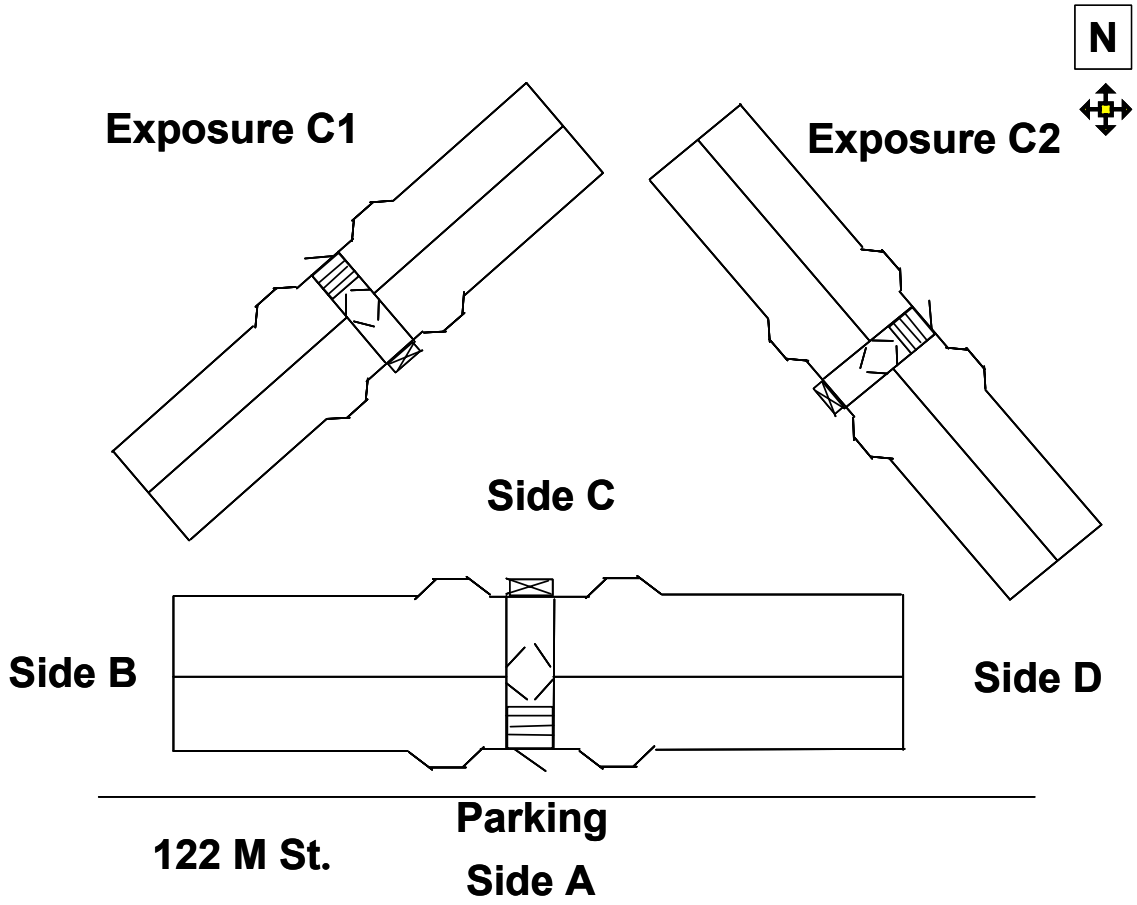
N
Exposure C1
Exposure C2
Side C
Side B
Side D
Parking
122 M St.
Side A

Floor Plan

Third Floor

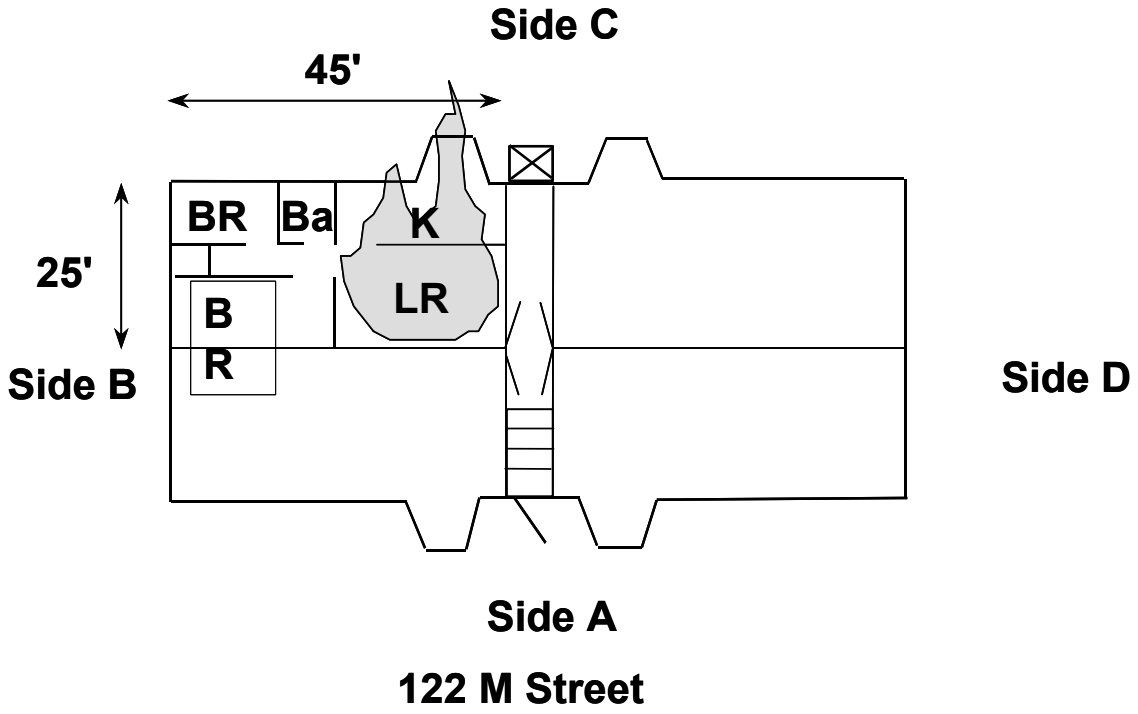

Column #1 Primary Factor Size-Up Chart		
Pertinent Factors (P)	(Check appropriate boxes)	P
Life Hazard	Occupants	
	Firefighters	
Location/Fire	Fire Bldg/ Exposures on Arrival	
	After Arrival – Burn Time	
	Radiation/Conduction/Convection	
Construction	Fire Building	
	Exposures	
Occupancy (Contents)	Fire Building	
	Exposures	
Height	Fire Building (Front/Rear)	
	Exposures (Front/Rear)	
Area	Fire Building/Configuration	
	Proximity of Exposures /Config.	
Structural Collapse	Fire Building	
	Exposures	
	Collapse Zone	
	Apparatus Placement	
Weather	Visibility	
	Temperature/Humidity	
	Wind – Direction/Velocity	
Resource Requirement	Apparatus/Personnel/Equipment - RIC	
	Water Supply/Suppression Agent	
Auxiliary Appliances	Fire Building Supplied	
	Exposures Supplied	
Topography	Street Conditions	
Explosions/ Back Draft	Flash Over Conditions	
Time	Duration of Operations (Rest-Rehab) Time of Day Time of Alarm	

Column #2 Incident Objectives Attainable/ Measurable/ Flexible

Examples of Incident Objectives:

- Safe Removal of All Occupants.
- Contain and Control Fire to Room/Building of Origin.
- Contain, Control and Limit Fire in Exposures.
- Other.

List Incident Objectives:

1. _____
2. _____
3. _____
4. _____
5. _____
6. _____
7. _____
8. _____
9. _____
10. _____

Column #3 Activities (Strategies)

[R] Rescue
- Interior/Exterior/Both

[E] Exposure Protection
- Exposure Examination

[C/E] Confinement/Extinguishment
- Hose Line Replacement

[O] Overhaul
- Expose Hidden Fire

[V] Ventilation
- Removal of Occupants
- Fire Control

[S] Salvage
- Water – Run-Off
- Apply Covers

Forcible Entry
- Location
- Method

Special Equipment
- Imaging Cameras

List Incident Strategies	Assign To:
1.	
2.	
3.	
4.	
5.	
6.	
7.	
8.	
9.	
10.	

Column #4 Evaluate Effect of Activities (Strategies) Every 10 Minutes

Effective	Ineffective

Identify alternative strategies for firefighter safety when occupant safety has been determined not to be a Primary Factor.

- _____
- _____
- _____
- _____
- _____
- _____
- _____

Command Sequence Cycle:

Sizeup:

Objective(s):

Strategy(ies):

Tactics:

Implement:

Evaluate:

Activity 3.1 (cont'd)

Scenario 3

567 J Street

Building Description:

90 x 250', three-story, Type I, fire-resistive construction.

Occupancy Type: Office building.

Fire Location: 567 J St.

Fire started in the first floor office area. Involvement is 25 percent of the first floor.

Time:

1300 hours.

Water Available:

Hydrant area--hydrants at every corner, system flow = 1,500 gpm.

Resources Available:

1st Alarm:
E-1
E-2
E-3
T-1
SQ-1
BC-1

Staffing:

Four Firefighters per apparatus.
Battalion Chief 1: 30-minute response.

Floor Plan

Typical all Floors--Fire on First Floor
567 J Street

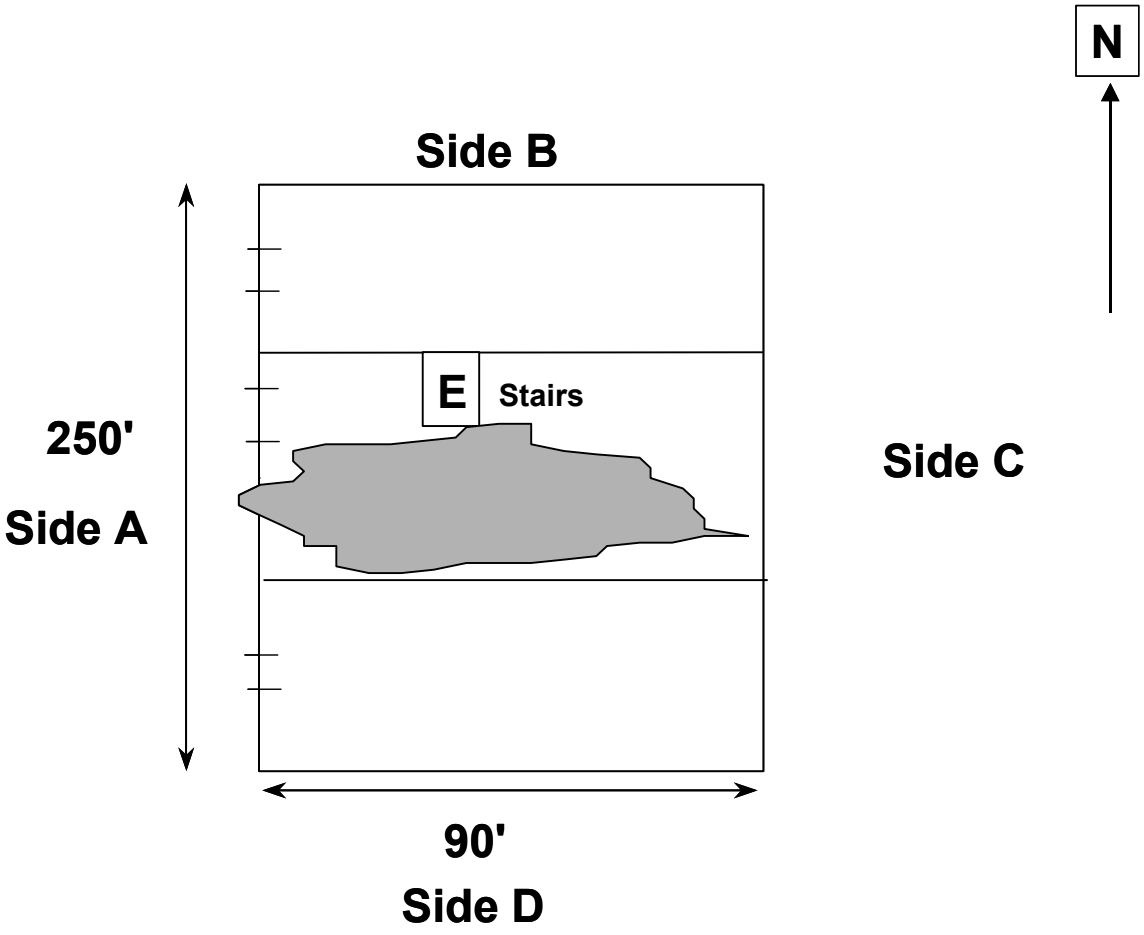

Column #1 Primary Factor Size-Up Chart		
Pertinent Factors (P)	(Check appropriate boxes)	P
Life Hazard	Occupants	
	Firefighters	
Location/Fire	Fire Bldg/ Exposures on Arrival	
	After Arrival – Burn Time	
	Radiation/Conduction/Convection	
Construction	Fire Building	
	Exposures	
Occupancy (Contents)	Fire Building	
	Exposures	
Height	Fire Building (Front/Rear)	
	Exposures (Front/Rear)	
Area	Fire Building/Configuration	
	Proximity of Exposures /Config.	
Structural Collapse	Fire Building	
	Exposures	
	Collapse Zone	
	Apparatus Placement	
Weather	Visibility	
	Temperature/Humidity	
	Wind – Direction/Velocity	
Resource Requirement	Apparatus/Personnel/Equipment - RIC	
	Water Supply/Suppression Agent	
Auxiliary Appliances	Fire Building Supplied	
	Exposures Supplied	
Topography	Street Conditions	
Explosions/ Back Draft	Flash Over Conditions	
Time	Duration of Operations (Rest-Rehab) Time of Day Time of Alarm	

Column #2 Incident Objectives Attainable/ Measurable/ Flexible

Examples of Incident Objectives:

- Safe Removal of All Occupants.
- Contain and Control Fire to Room/Building of Origin.
- Contain, Control and Limit Fire in Exposures.
- Other.

List Incident Objectives:

1. _____
2. _____
3. _____
4. _____
5. _____
6. _____
7. _____
8. _____
9. _____
10. _____

Column #3 Activities (Strategies)

[R] Rescue
- Interior/Exterior/Both

[E] Exposure Protection
- Exposure Examination

[C/E] Confinement/Extinguishment
- Hose Line Replacement

[O] Overhaul
- Expose Hidden Fire

[V] Ventilation
- Removal of Occupants
- Fire Control

[S] Salvage
- Water – Run-Off
- Apply Covers

Forcible Entry
- Location
- Method

Special Equipment
- Imaging Cameras

List Incident Strategies	Assign To:
1.	
2.	
3.	
4.	
5.	
6.	
7.	
8.	
9.	
10.	

Column #4 Evaluate Effect of Activities (Strategies) Every 10 Minutes

Effective	Ineffective

Identify alternative strategies for firefighter safety when occupant safety has been determined not to be a Primary Factor.

- _____
- _____
- _____
- _____
- _____
- _____
- _____

Command Sequence Cycle:

Sizeup:

Objectives:

Strategy(ies):

Tactics:

Implement:

Evaluate:

Fire Confinement Command Sequence #2
100 Block B Street

Sizeup Report of Fireground Conditions

Initial Report

- Exact location and conditions as observed.
- Size of structure--stories and dimensions--type of construction--occupied or vacant.
- Smoke/Fire--location and density.
- Status of occupants--if known.
- Exposures--Sides A, B, C, D or other.
- Engine _____ is establishing _____Street Command.

Subsequent Report

Information not immediately reported and/or information developed upon investigation--to be given ASAP or within 5 minutes.

Progress Report

To be given by the IC every 10 minutes until fire is under control.

Plot Plan

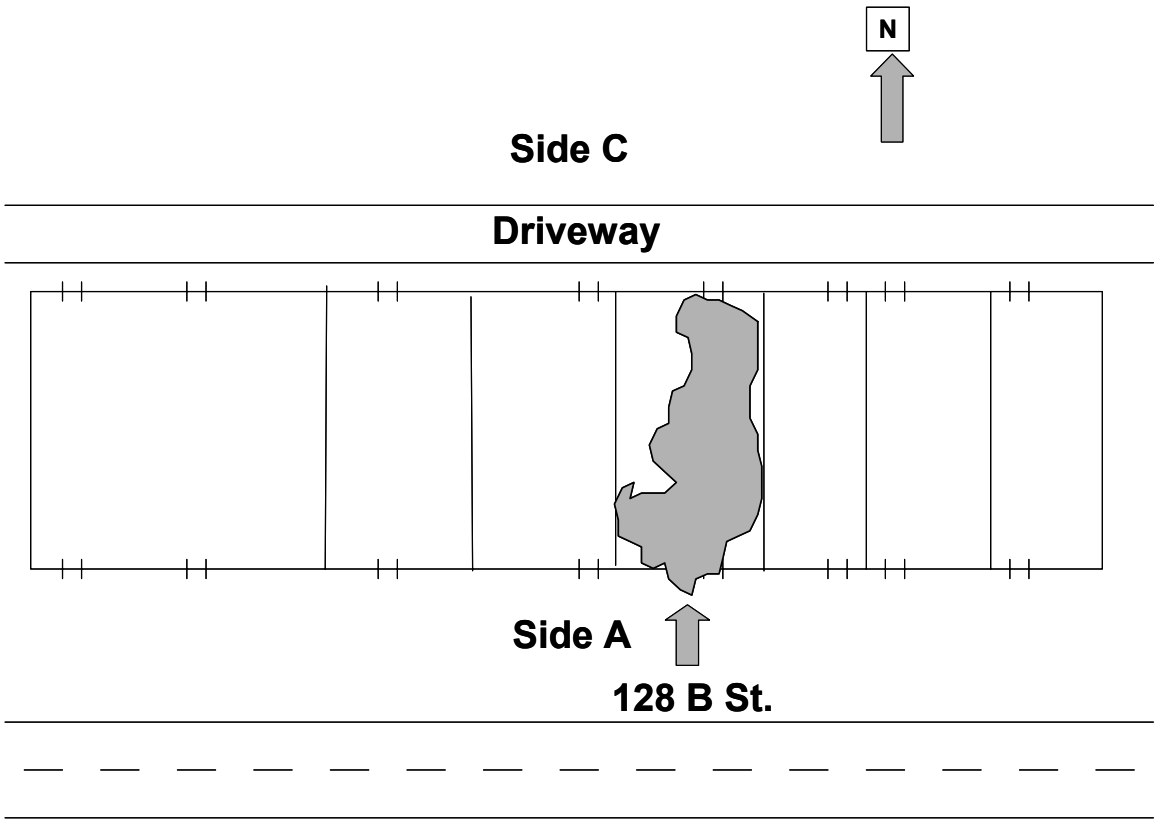

Activity 3.2

Fire Confinement and Exposure Protection

Purpose

To learn where to use the command sequence cycle to develop an action plan for exposure protection for selected occupancies.

Directions

1. The class will be divided into table groups.

2. There are three scenarios for exposure protection.

3. A floor/plot plan is in the SM for each occupancy. The floor/plot plans show the amount of involvement in the building.

4. You will be shown several slides of the building's various sides and one slide showing smoke and/or fire.

5. The instructor will assign one scenario to each group. Look at your floor/plot plans for the scenario.

6. Each group will develop an exposure protection action plan using the command sequence cycle for its assigned scenario. Use the Primary Factors Chart and complete the Student Activity Worksheet.

7. Groups will be required to report back to the class their action plans using the command sequence cycle.

8. Each group has 10 minutes to complete its assignment.

Activity 3.2 (cont'd)

Scenario 1

246 10th Street

Building Description:

50' x 75', three-story, Type III, ordinary construction.

Occupancy Type: Warehouse.

Connected to a three-story office building and two-story warehouse both of ordinary construction. All occupants have been removed.

Fire Location: 246 10th St.

Fire is on the first floor at the rear-left of the warehouse. Involvement is approximately 25 percent.

Time:

1700 hours.

Water Available:

Hydrant area--hydrants at every corner, system flow = 8,000 gpm.

Resources Available:

1st Alarm:
E-1
E-2
E-3
T-1
SQ-1
BC-1

Staffing: four firefighters per apparatus.

Floor Plan

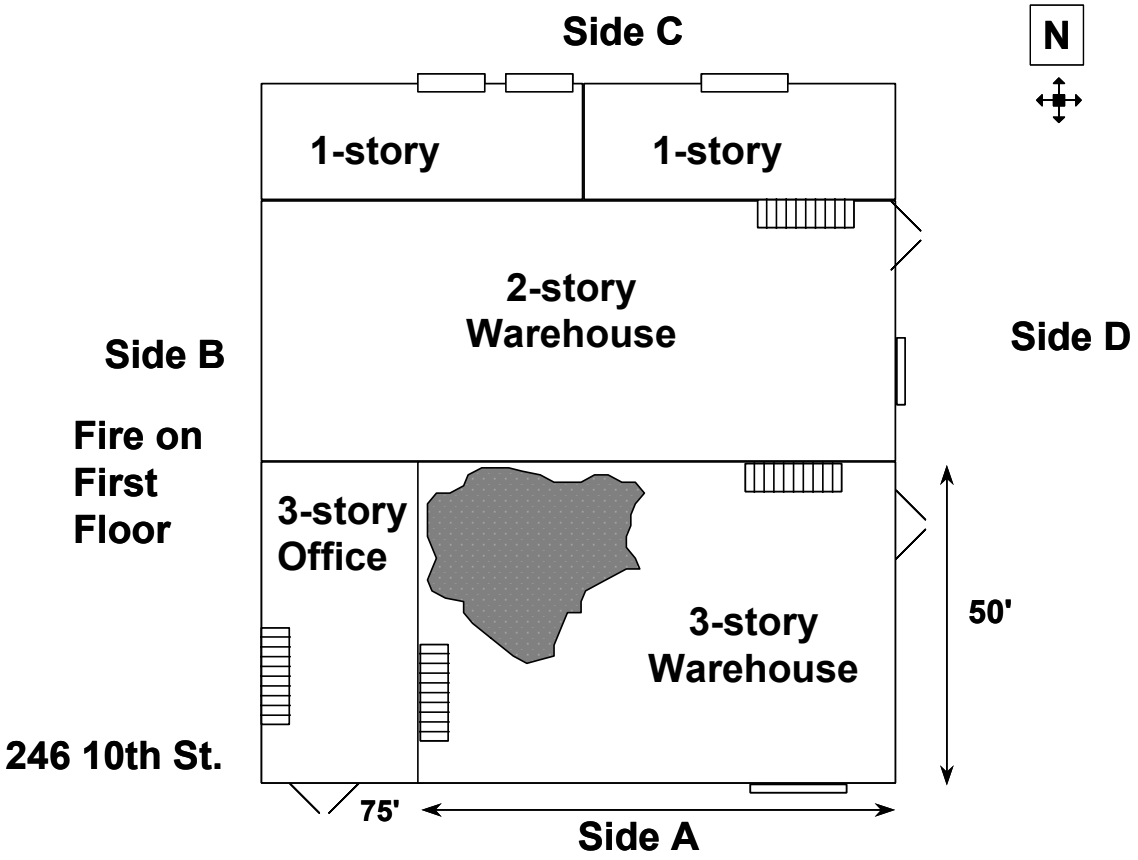
Side C
N
1-story
1-story
2-story
Warehouse
Side B
Side D
Fire on
First
Floor
3-story
Office
3-story
Warehouse
50'
246 10th St.
75'
Side A

Column #1 Primary Factor Size-Up Chart		
Pertinent Factors (P)	(Check appropriate boxes)	P
Life Hazard	Occupants	
	Firefighters	
Location/Fire	Fire Bldg/ Exposures on Arrival	
	After Arrival – Burn Time	
	Radiation/Conduction/Convection	
Construction	Fire Building	
	Exposures	
Occupancy (Contents)	Fire Building	
	Exposures	
Height	Fire Building (Front/Rear)	
	Exposures (Front/Rear)	
Area	Fire Building/Configuration	
	Proximity of Exposures /Config.	
Structural Collapse	Fire Building	
	Exposures	
	Collapse Zone	
	Apparatus Placement	
Weather	Visibility	
	Temperature/Humidity	
	Wind – Direction/Velocity	
Resource Requirement	Apparatus/Personnel/Equipment - RIC	
	Water Supply/Suppression Agent	
Auxiliary Appliances	Fire Building Supplied	
	Exposures Supplied	
Topography	Street Conditions	
Explosions/ Back Draft	Flash Over Conditions	
Time	Duration of Operations (Rest-Rehab) Time of Day Time of Alarm	

Column #2 Incident Objectives Attainable/ Measurable/ Flexible

Examples of Incident Objectives:

- Safe Removal of All Occupants.
- Contain and Control Fire to Room/Building of Origin.
- Contain, Control and Limit Fire in Exposures.
- Other.

List Incident Objectives:

1. _____
2. _____
3. _____
4. _____
5. _____
6. _____
7. _____
8. _____
9. _____
10. _____

Column #3 Activities (Strategies)

[R] Rescue
- Interior/Exterior/Both

[E] Exposure Protection
- Exposure Examination

[C/E] Confinement/Extinguishment
- Hose Line Replacement

[O] Overhaul
- Expose Hidden Fire

[V] Ventilation
- Removal of Occupants
- Fire Control

[S] Salvage
- Water – Run-Off
- Apply Covers

Forcible Entry
- Location
- Method

Special Equipment
- Imaging Cameras

List Incident Strategies	Assign To:
1.	
2.	
3.	
4.	
5.	
6.	
7.	
8.	
9.	
10.	

Column #4 Evaluate Effect of Activities (Strategies) Every 10 Minutes

Effective	Ineffective

Identify alternative strategies for firefighter safety when occupant safety has been determined not to be a Primary Factor.

- _____
- _____
- _____
- _____
- _____
- _____
- _____

Command Sequence Cycle:

Sizeup:

Objectives:

Strategy(ies):

Tactics:

Implement:

Evaluate:

Scenario 2

122 M Street

Building Description:

50' x 90', three-story, Type V, wood-frame construction.

Occupancy Type: Garden apartment complex.

One section, four apartments per floor--total 12 apartments.

Fire Location: 122 M St.

Fire started on the second floor, spread to the balcony and extended to the third floor balcony.

Time:

1100 hours.

Water Available:

Hydrant area--hydrants at every corner--system flow = 2,500 gpm.

Resources Available:

1st Alarm:
E-1
E-2
E-3
T-1
SQ-1
BC-1

Staffing: four firefighters per apparatus.

Plot Plan

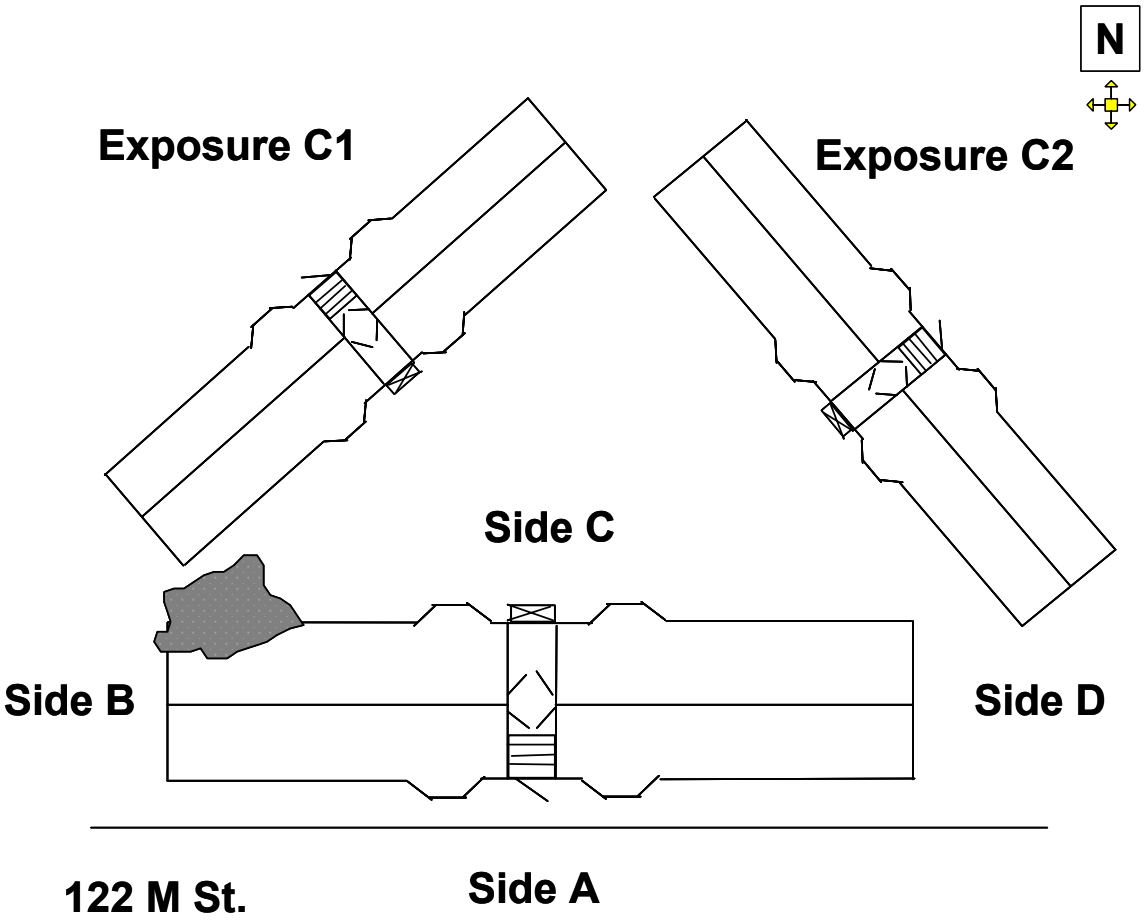

Column #1 Primary Factor Size-Up Chart		
Pertinent Factors (P)	(Check appropriate boxes)	P
Life Hazard	Occupants	
	Firefighters	
Location/Fire	Fire Bldg/ Exposures on Arrival	
	After Arrival – Burn Time	
	Radiation/Conduction/Convection	
Construction	Fire Building	
	Exposures	
Occupancy (Contents)	Fire Building	
	Exposures	
Height	Fire Building (Front/Rear)	
	Exposures (Front/Rear)	
Area	Fire Building/Configuration	
	Proximity of Exposures /Config.	
Structural Collapse	Fire Building	
	Exposures	
	Collapse Zone	
	Apparatus Placement	
Weather	Visibility	
	Temperature/Humidity	
	Wind – Direction/Velocity	
Resource Requirement	Apparatus/Personnel/Equipment - RIC	
	Water Supply/Suppression Agent	
Auxiliary Appliances	Fire Building Supplied	
	Exposures Supplied	
Topography	Street Conditions	
Explosions/ Back Draft	Flash Over Conditions	
Time	Duration of Operations (Rest-Rehab) Time of Day Time of Alarm	

Column #2 Incident Objectives Attainable/ Measurable/ Flexible

Examples of Incident Objectives:

- Safe Removal of All Occupants.
- Contain and Control Fire to Room/Building of Origin.
- Contain, Control and Limit Fire in Exposures.
- Other.

List Incident Objectives:

1. _____
2. _____
3. _____
4. _____
5. _____
6. _____
7. _____
8. _____
9. _____
10. _____

Column #3 Activities (Strategies)

[R] Rescue
- Interior/Exterior/Both

[E] Exposure Protection
- Exposure Examination

[C/E] Confinement/Extinguishment
- Hose Line Replacement

[O] Overhaul
- Expose Hidden Fire

[V] Ventilation
- Removal of Occupants
- Fire Control

[S] Salvage
- Water – Run-Off
- Apply Covers

Forcible Entry
- Location
- Method

Special Equipment
- Imaging Cameras

List Incident Strategies	Assign To:
1.	
2.	
3.	
4.	
5.	
6.	
7.	
8.	
9.	
10.	

Column #4 Evaluate Effect of Activities (Strategies) Every 10 Minutes

Effective	Ineffective

Identify alternative strategies for firefighter safety when occupant safety has been determined not to be a Primary Factor.

- _____
- _____
- _____
- _____
- _____
- _____
- _____

Command Sequence Cycle:

Sizeup:

Objectives:

Strategy(ies):

Tactics:

Implement:

Evaluate:

Scenario 3

700 Block 25th Street

Building Description:

21' x 45', two-story, Type III, ordinary construction.

Occupancy Type: Row houses.

Seven row houses.

Fire Location: 789 25th St.

Fire started in the first floor living room. Involvement is 50 percent of the first floor of one row house.

Time:

1800 hours.

Water Available:

Hydrant area, hydrants at every corner, system flow = 1,500 gpm.

Resources Available:

1st Alarm:
E-1
E-2
E-3
T-1
SQ-1
BC-1

Staffing: four firefighters per apparatus.

Floor Plan

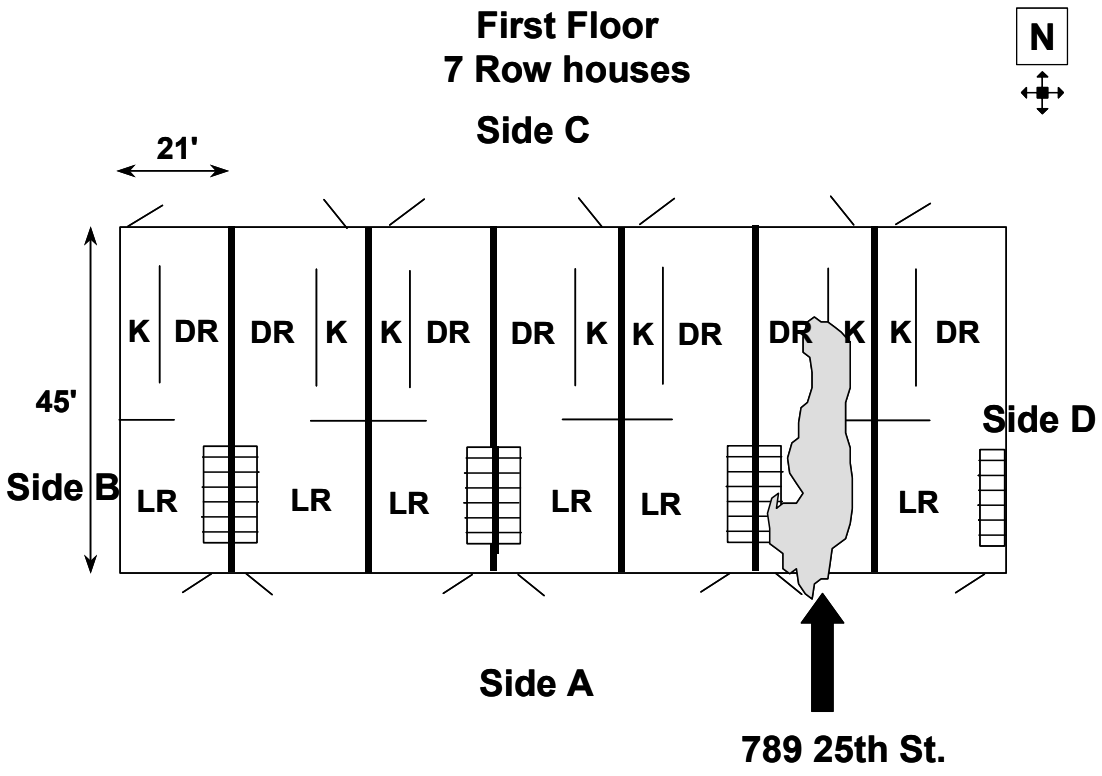
First Floor
7 Row houses
Side C
N
21'
45'
K
DR
LR
Side B
Side D
Side A
789 25th St.

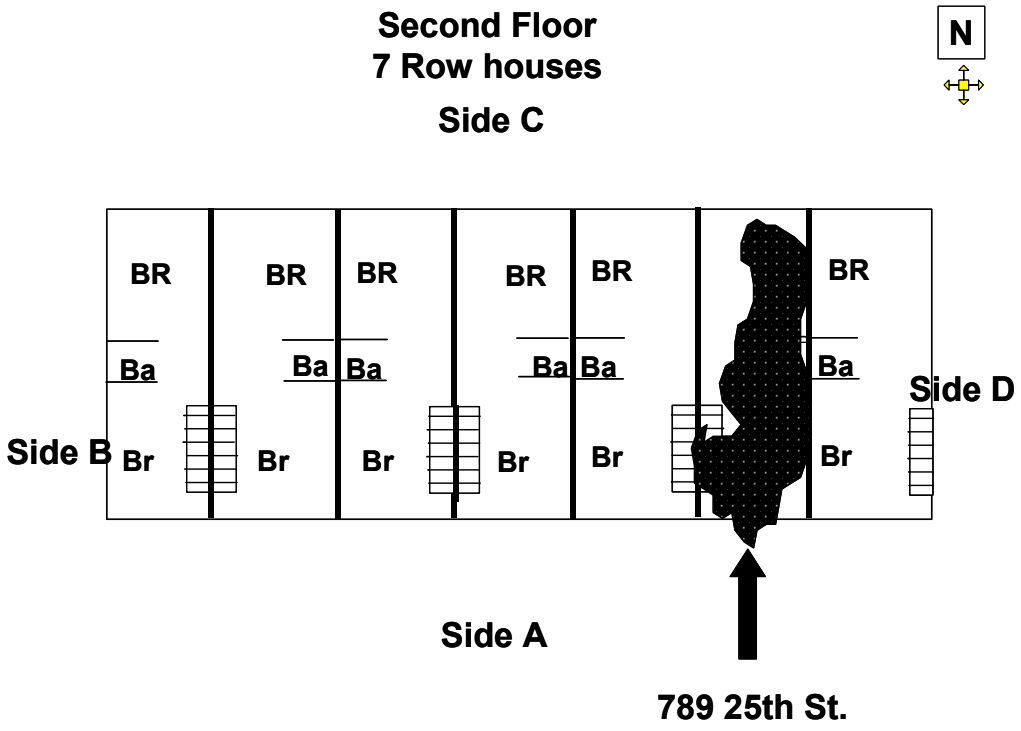
Second Floor
7 Row houses
Side C
N
BR
Ba
Br
Side B
Side D
Side A
789 25th St.

Column #1 Primary Factor Size-Up Chart		
Pertinent Factors (P)	(Check appropriate boxes)	P
Life Hazard	Occupants	
	Firefighters	
Location/Fire	Fire Bldg/ Exposures on Arrival	
	After Arrival – Burn Time	
	Radiation/Conduction/Convection	
Construction	Fire Building	
	Exposures	
Occupancy (Contents)	Fire Building	
	Exposures	
Height	Fire Building (Front/Rear)	
	Exposures (Front/Rear)	
Area	Fire Building/Configuration	
	Proximity of Exposures /Config.	
Structural Collapse	Fire Building	
	Exposures	
	Collapse Zone	
	Apparatus Placement	
Weather	Visibility	
	Temperature/Humidity	
	Wind – Direction/Velocity	
Resource Requirement	Apparatus/Personnel/Equipment - RIC	
	Water Supply/Suppression Agent	
Auxiliary Appliances	Fire Building Supplied	
	Exposures Supplied	
Topography	Street Conditions	
Explosions/ Back Draft	Flash Over Conditions	
Time	Duration of Operations (Rest-Rehab) Time of Day Time of Alarm	

Column #2 Incident Objectives Attainable/ Measurable/ Flexible

Examples of Incident Objectives:

- Safe Removal of All Occupants.
- Contain and Control Fire to Room/Building of Origin.
- Contain, Control and Limit Fire in Exposures.
- Other.

List Incident Objectives:

1. _____
2. _____
3. _____
4. _____
5. _____
6. _____
7. _____
8. _____
9. _____
10. _____

Column #3 Activities (Strategies)

[R] Rescue
- Interior/Exterior/Both

[E] Exposure Protection
- Exposure Examination

[C/E] Confinement/Extinguishment
- Hose Line Replacement

[O] Overhaul
- Expose Hidden Fire

[V] Ventilation
- Removal of Occupants
- Fire Control

[S] Salvage
- Water – Run-Off
- Apply Covers

Forcible Entry
- Location
- Method

Special Equipment
- Imaging Cameras

List Incident Strategies	Assign To:
1.	
2.	
3.	
4.	
5.	
6.	
7.	
8.	
9.	
10.	

Column #4 Evaluate Effect of Activities (Strategies) Every 10 Minutes

Effective	Ineffective

Identify alternative strategies for firefighter safety when occupant safety has been determined not to be a Primary Factor.

- _____
- _____
- _____
- _____
- _____
- _____
- _____

Command Sequence Cycle:

Sizeup:

Objectives:

Strategy(ies):

Tactics:

Implement:

Evaluate:

Fire Confinement Command Sequence #3
6th and I Street

Sizeup Report of Fireground Conditions

Initial Report

- Exact location and conditions as observed.
- Size of structure--stories and dimensions--type of construction--occupied or vacant.
- Smoke/Fire--location and density.
- Status of occupants--if known.
- Exposures--Sides A, B, C, D or other.
- Engine _____ is establishing _____ Street Command.

Subsequent Report

Information not immediately reported and/or information developed upon investigation--to be given ASAP or within 5 minutes.

Progress Report

To be given by the IC every 10 minutes until fire is under control.

Plot Plan

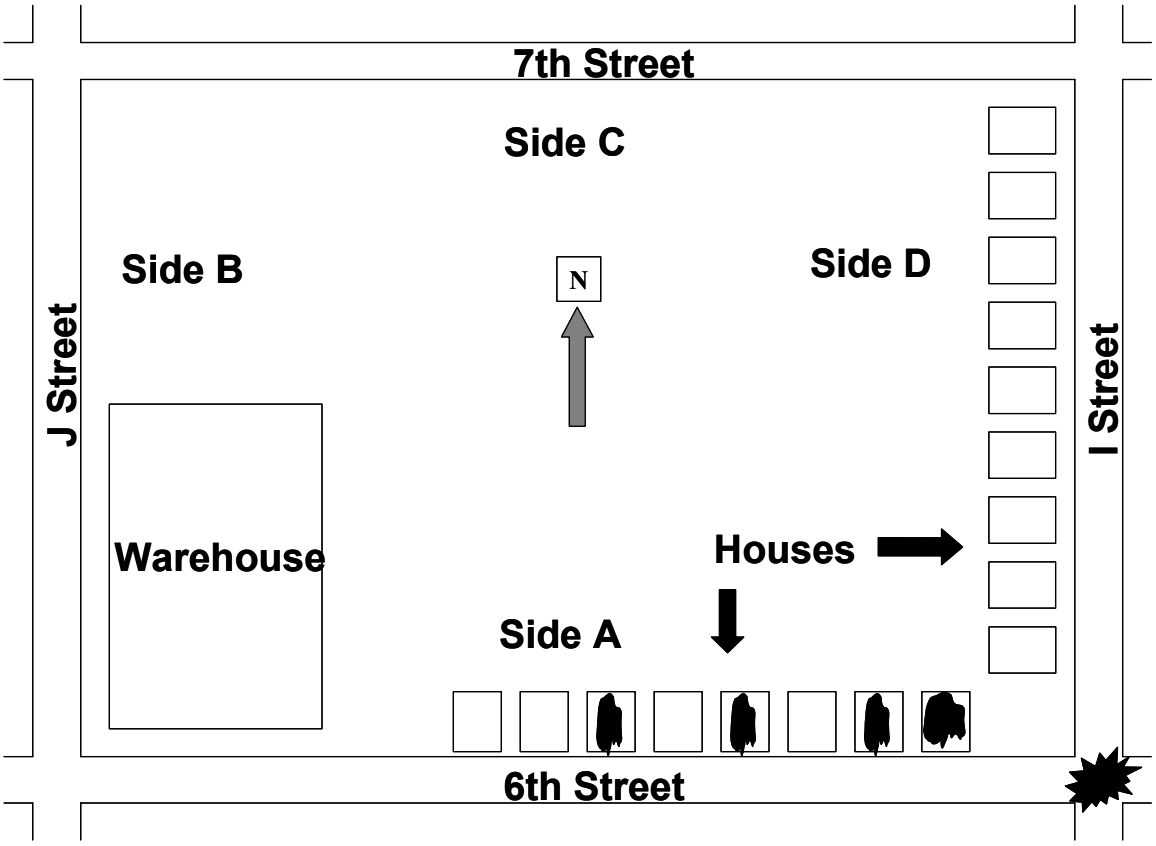
7th Street
Side C
Side B
N
Side D
J Street
I Street
Warehouse
Houses
Side A
6th Street

Activity 3.3

Fire Confinement, Exposure Protection, and Fire Extinguishment

Purpose

To learn where to use the command sequence cycle to develop an action plan for fire extinguishment for selected occupancies.

Directions

1. The class will be divided into table groups.

2. There are three scenarios for fire extinguishment.

3. A floor/plot plan is in the SM for each occupancy. The floor/plot plans show the amount of involvement in the building.

4. You will be shown several slides of the building's various sides and one slide showing smoke and/or fire.

5. The instructor will assign one scenario to each group. Look at the floor/plot plans for the scenario.

6. Each group will develop a fire extinguishment action plan using the command sequence cycle for its assigned scenario. Use the Primary Factors Chart and complete the Student Activity Worksheet.

7. Groups will be required to report back to the class their action plans using the command sequence cycle.

8. Each group has 10 minutes to complete its assignment.

Activity 3.3 (cont'd)

Scenario 1

356 E Street

Building Description:

35' x 90', three-story, Type III, ordinary construction.

Two stair shafts, one at the lobby and one at Side C.

Occupancy Type: Boarding house.

Fire Location: 356 E St.

Fire is on the second floor, second room of Side D. Room involvement is 100 percent. Percentage of floor involved is 10 percent.

Time:

1300 hours.

Water Available:

Hydrant area, hydrants at every corner, system flow = 1,000 gpm.

Resources Available:

1st Alarm:
E-1
E-2
E-3
T-1
SQ-1
BC-1

Staffing: four firefighters per apparatus.

Floor Plan

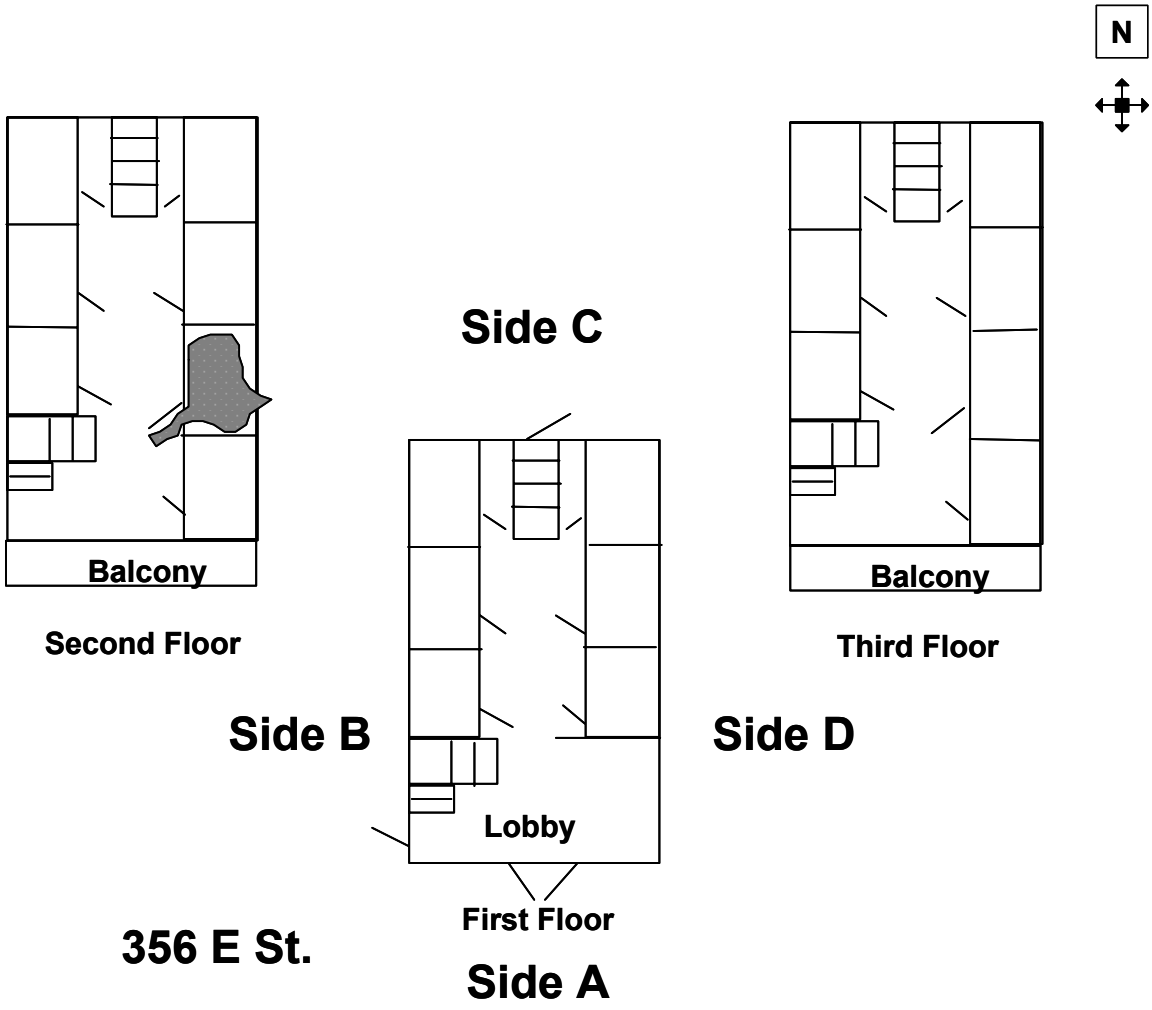
N
Side C
Balcony
Second Floor
Balcony
Third Floor
Side B
Side D
Lobby
First Floor
356 E St.
Side A

Column #1 Primary Factor Size-Up Chart		
Pertinent Factors (P)	(Check appropriate boxes)	P
Life Hazard	Occupants	
	Firefighters	
Location/Fire	Fire Bldg/ Exposures on Arrival	
	After Arrival – Burn Time	
	Radiation/Conduction/Convection	
Construction	Fire Building	
	Exposures	
Occupancy (Contents)	Fire Building	
	Exposures	
Height	Fire Building (Front/Rear)	
	Exposures (Front/Rear)	
Area	Fire Building/Configuration	
	Proximity of Exposures /Config.	
Structural Collapse	Fire Building	
	Exposures	
	Collapse Zone	
	Apparatus Placement	
Weather	Visibility	
	Temperature/Humidity	
	Wind – Direction/Velocity	
Resource Requirement	Apparatus/Personnel/Equipment - RIC	
	Water Supply/Suppression Agent	
Auxiliary Appliances	Fire Building Supplied	
	Exposures Supplied	
Topography	Street Conditions	
Explosions/ Back Draft	Flash Over Conditions	
Time	Duration of Operations (Rest-Rehab) Time of Day Time of Alarm	

Column #2 Incident Objectives Attainable/ Measurable/ Flexible

Examples of Incident Objectives:

- Safe Removal of All Occupants.
- Contain and Control Fire to Room/Building of Origin.
- Contain, Control and Limit Fire in Exposures.
- Other.

List Incident Objectives:

1. _____
2. _____
3. _____
4. _____
5. _____
6. _____
7. _____
8. _____
9. _____
10. _____

Column #3 Activities (Strategies)

[R] Rescue
- Interior/Exterior/Both

[E] Exposure Protection
- Exposure Examination

[C/E] Confinement/Extinguishment
- Hose Line Replacement

[O] Overhaul
- Expose Hidden Fire

[V] Ventilation
- Removal of Occupants
- Fire Control

[S] Salvage
- Water – Run-Off
- Apply Covers

Forcible Entry
- Location
- Method

Special Equipment
- Imaging Cameras

List Incident Strategies	Assign To:
1.	
2.	
3.	
4.	
5.	
6.	
7.	
8.	
9.	
10.	

Column #4 Evaluate Effect of Activities (Strategies) Every 10 Minutes

Effective	Ineffective

Identify alternative strategies for firefighter safety when occupant safety has been determined not to be a Primary Factor.

- _____
- _____
- _____
- _____
- _____
- _____
- _____

Command Sequence Cycle:

Sizeup:

Objectives:

Strategy(ies):

Tactics:

Implement:

Evaluate:

Scenario 2

678 14th Street

Building Description:

45' x 90', one-story, Type V, wood-frame construction.

Occupancy Type: Farmer's Co-op.

Fire Location: 678 14th St.

Fire is in the front part of the building. Involvement is approximately 25 percent.

Time:

0600 hours.

Water Available:

Hydrant area, system flow = 1,000 gpm.

Resources Available:

1st Alarm:
E-1
E-2
E-3
T-1
SQ-1
BC-1

Staffing: four firefighters per apparatus.

Floor Plan

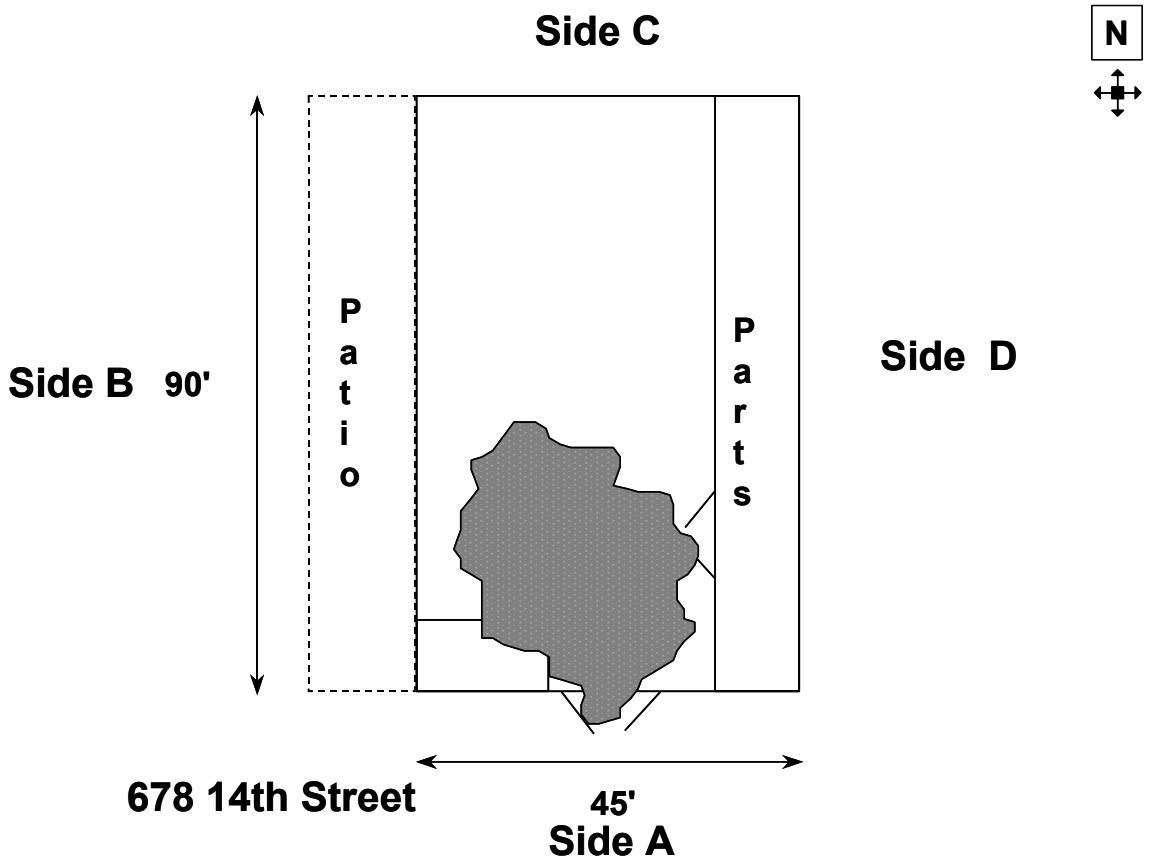

Column #1 Primary Factor Size-Up Chart		
Pertinent Factors (P)	(Check appropriate boxes)	P
Life Hazard	Occupants	
	Firefighters	
Location/Fire	Fire Bldg/ Exposures on Arrival	
	After Arrival – Burn Time	
	Radiation/Conduction/Convection	
Construction	Fire Building	
	Exposures	
Occupancy (Contents)	Fire Building	
	Exposures	
Height	Fire Building (Front/Rear)	
	Exposures (Front/Rear)	
Area	Fire Building/Configuration	
	Proximity of Exposures /Config.	
Structural Collapse	Fire Building	
	Exposures	
	Collapse Zone	
	Apparatus Placement	
Weather	Visibility	
	Temperature/Humidity	
	Wind – Direction/Velocity	
Resource Requirement	Apparatus/Personnel/Equipment - RIC	
	Water Supply/Suppression Agent	
Auxiliary Appliances	Fire Building Supplied	
	Exposures Supplied	
Topography	Street Conditions	
Explosions/ Back Draft	Flash Over Conditions	
Time	Duration of Operations (Rest-Rehab) Time of Day Time of Alarm	

Column #2 Incident Objectives Attainable/ Measurable/ Flexible

Examples of Incident Objectives:

- Safe Removal of All Occupants.
- Contain and Control Fire to Room/Building of Origin.
- Contain, Control and Limit Fire in Exposures.
- Other.

List Incident Objectives:

1. _____
2. _____
3. _____
4. _____
5. _____
6. _____
7. _____
8. _____
9. _____
10. _____

Column #3 Activities (Strategies)

[R] Rescue
- Interior/Exterior/Both

[E] Exposure Protection
- Exposure Examination

[C/E] Confinement/Extinguishment
- Hose Line Replacement

[O] Overhaul
- Expose Hidden Fire

[V] Ventilation
- Removal of Occupants
- Fire Control

[S] Salvage
- Water – Run-Off
- Apply Covers

Forcible Entry
- Location
- Method

Special Equipment
- Imaging Cameras

List Incident Strategies	Assign To:
1.	
2.	
3.	
4.	
5.	
6.	
7.	
8.	
9.	
10.	

Column #4 Evaluate Effect of Activities (Strategies) Every 10 Minutes

Effective	Ineffective

Identify alternative strategies for firefighter safety when occupant safety has been determined not to be a Primary Factor.

- _____
- _____
- _____
- _____
- _____
- _____
- _____

Command Sequence Cycle:

Sizeup:

Objectives:

Strategy(ies):

Tactics:

Implement:

Evaluate:

Scenario 3

246 10th Street

Building Description:

50' x 75', three-story, Type III, ordinary construction.

Connected exposed buildings on Side B and Side C.

Occupancy Type: Warehouse.

Fire Location: 246 10th St.

Fire is in the B-C corner of the second floor. Involvement is approximately 25 percent.

Time:

1200 hours.

Water Available:

Hydrant area, system flow = 5,000 gpm.

Resources Available:

1st Alarm:
E-1
E-2
E-3
T-1
SQ-1
BC-1

Staffing: four firefighters per apparatus.

Floor Plan

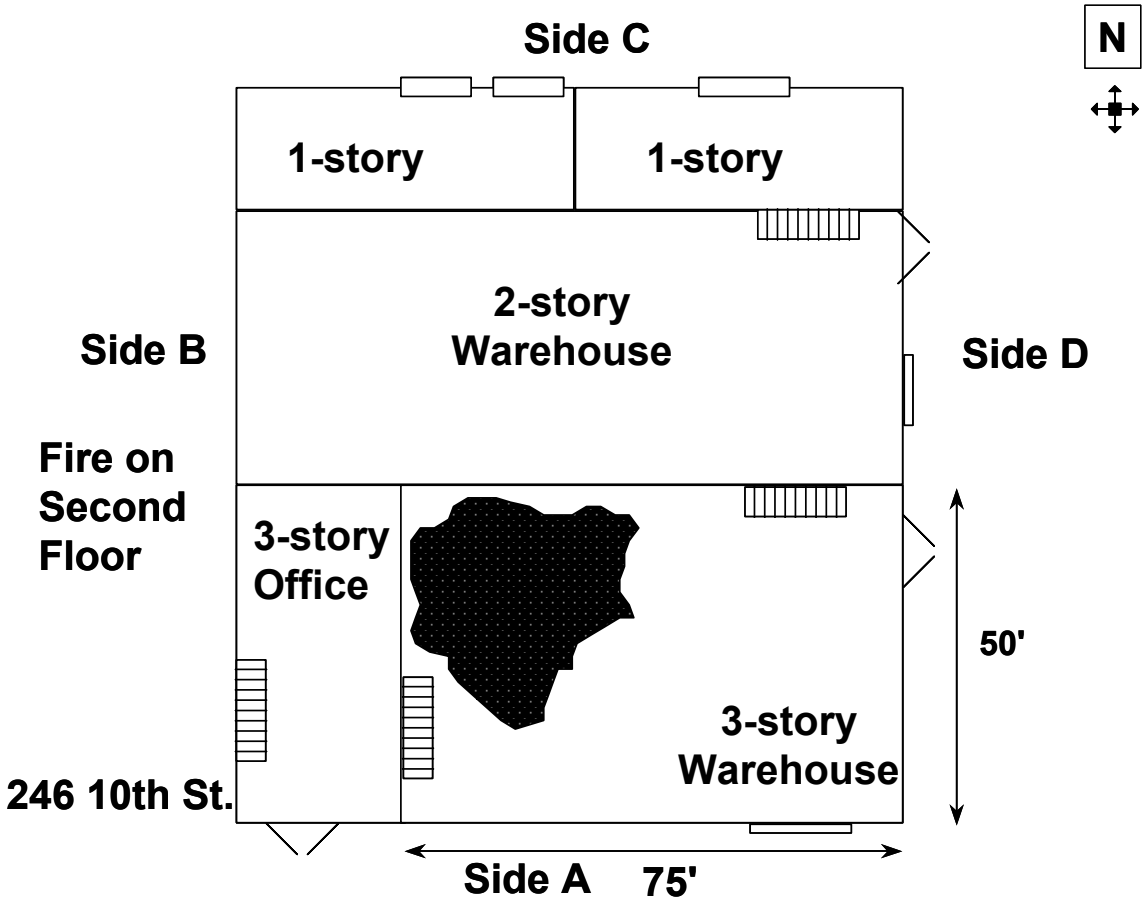
Side C
N
1-story
1-story
2-story
Warehouse
Side B
Side D
Fire on
Second
Floor
3-story
Office
50'
3-story
Warehouse
246 10th St.
Side A
75'

Column #1 Primary Factor Size-Up Chart		
Pertinent Factors (P)	(Check appropriate boxes)	P
Life Hazard	Occupants	
	Firefighters	
Location/Fire	Fire Bldg/ Exposures on Arrival	
	After Arrival – Burn Time	
	Radiation/Conduction/Convection	
Construction	Fire Building	
	Exposures	
Occupancy (Contents)	Fire Building	
	Exposures	
Height	Fire Building (Front/Rear)	
	Exposures (Front/Rear)	
Area	Fire Building/Configuration	
	Proximity of Exposures /Config.	
Structural Collapse	Fire Building	
	Exposures	
	Collapse Zone	
	Apparatus Placement	
Weather	Visibility	
	Temperature/Humidity	
	Wind – Direction/Velocity	
Resource Requirement	Apparatus/Personnel/Equipment - RIC	
	Water Supply/Suppression Agent	
Auxiliary Appliances	Fire Building Supplied	
	Exposures Supplied	
Topography	Street Conditions	
Explosions/ Back Draft	Flash Over Conditions	
Time	Duration of Operations (Rest-Rehab) Time of Day Time of Alarm	

Column #2 Incident Objectives Attainable/ Measurable/ Flexible

Examples of Incident Objectives:

- Safe Removal of All Occupants.
- Contain and Control Fire to Room/Building of Origin.
- Contain, Control and Limit Fire in Exposures.
- Other.

List Incident Objectives:

1. _____
2. _____
3. _____
4. _____
5. _____
6. _____
7. _____
8. _____
9. _____
10. _____

Column #3 Activities (Strategies)

[R] Rescue
- Interior/Exterior/Both

[E] Exposure Protection
- Exposure Examination

[C/E] Confinement/Extinguishment
- Hose Line Replacement

[O] Overhaul
- Expose Hidden Fire

[V] Ventilation
- Removal of Occupants
- Fire Control

[S] Salvage
- Water – Run-Off
- Apply Covers

Forcible Entry
- Location
- Method

Special Equipment
- Imaging Cameras

List Incident Strategies	Assign To:
1.	
2.	
3.	
4.	
5.	
6.	
7.	
8.	
9.	
10.	

Column #4 Evaluate Effect of Activities (Strategies) Every 10 Minutes

Effective	Ineffective

Identify alternative strategies for firefighter safety when occupant safety has been determined not to be a Primary Factor.

- _____
- _____
- _____
- _____
- _____
- _____
- _____

Command Sequence Cycle:

Sizeup:

Objectives:

Strategy(ies):

Tactics:

Implement:

Evaluate:

Activity 3.4
Large Exercise 1

Seven Townhouses at 500 Block 33rd Street
Confinement, Exposure Protection, Extinguishment

Purpose

To apply the Command Sequence to a fire confinement, exposure protection, and fire extinguishment simulated exercise.

Directions

1. You will be assigned to teams. Refer to the Command Sequence Chart.

2. Two students will jointly assume the role of the first-due engine CO.

3. One student will be the team recorder.

4. Team recorder will record all actions taken by the first-due CO on the Command Sequence Chart.

5. The chief will not arrive on scene for 30 minutes, and the first-due CO will manage the incident until the arrival of the chief.

6. Upon completion of the primary sizeup process, the first-due CO will enter onto the Command Sequence Chart the following information based on the sizeup/cues:

   a. Primary factors.

   b. Initial objectives.

   c. Initial strategy.

7. Evaluate the effectiveness of your initial objectives, strategy, and tactics (OST), based on visible cues and feedback messages.

8. Adjust or modify your OST as required following the second sizeup.

9. Teams **are** to enter the transfer of command information onto the Command Sequence chart using the following format:

   a. Location and extent of fire.

   b. Control efforts.

   c. Deployment of resources.

   d. Need for additional resources.

Plot Plans

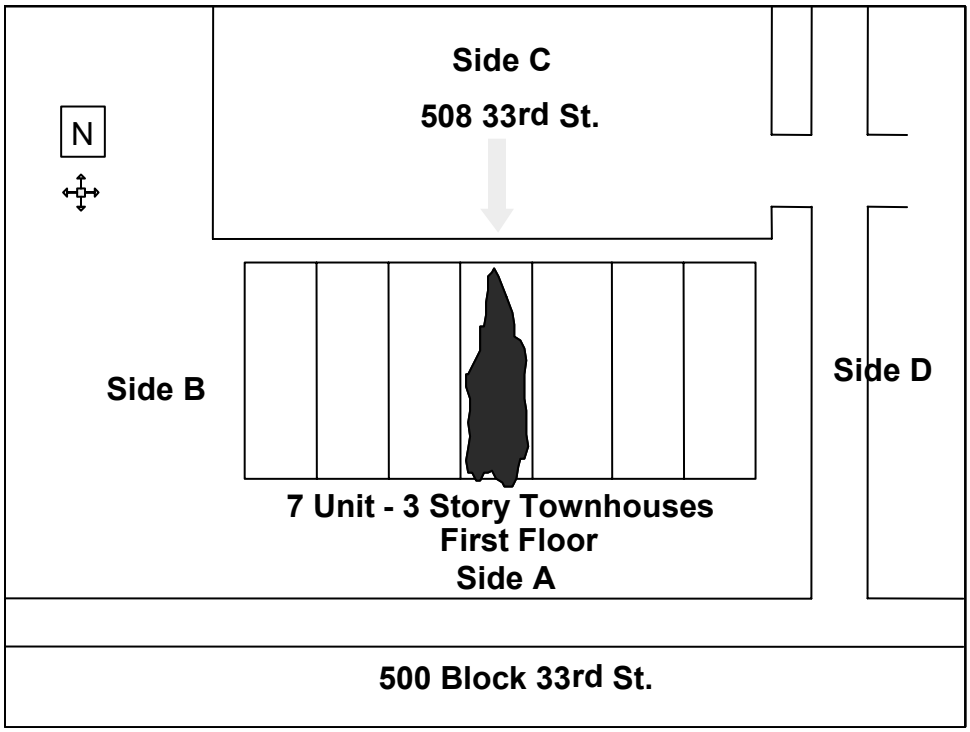
Side C
508 33rd St.
N
Side B
Side D
7 Unit - 3 Story Townhouses
First Floor
Side A
500 Block 33rd St.

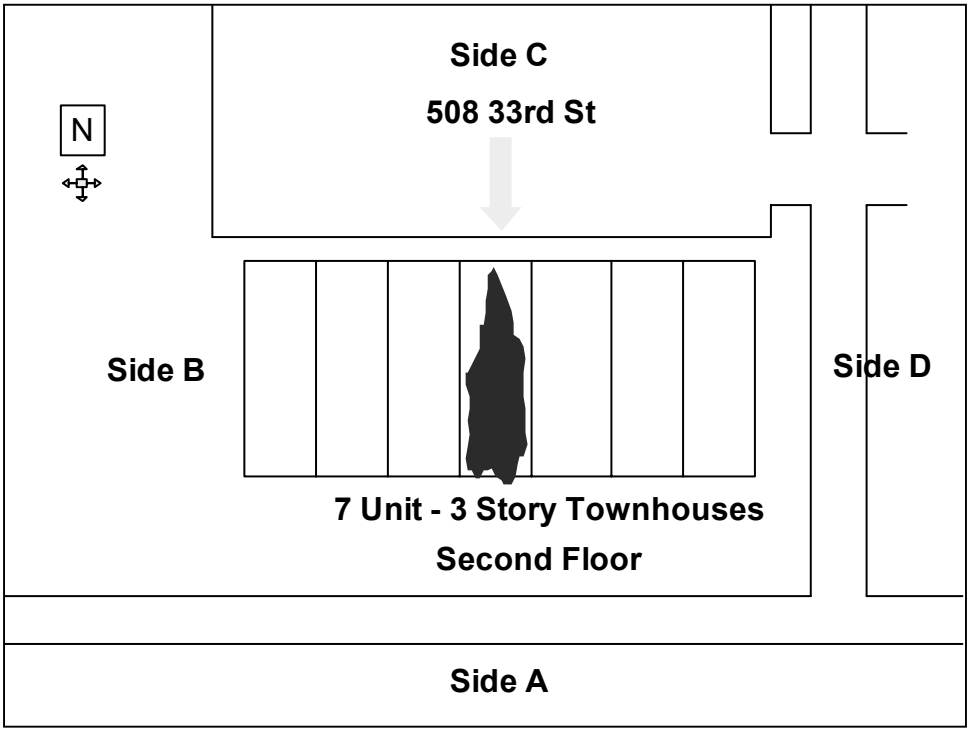
Side C
508 33rd St
N
Side B
Side D
7 Unit - 3 Story Townhouses
Second Floor
Side A

COMMAND SEQUENCE TACTICAL CHART

To be completed during simulation:

Tactical Assignment:	Assigned to:	Progress Report:

TRANSFER OF COMMAND CHART

To be completed upon transferring command:

Location and Extent of Fire:	
Control Efforts:	
Deployment of Resources:	
Need for Additional Resources:	

Column #1 Primary Factor Size-Up Chart		
Pertinent Factors (P)	(Check appropriate boxes)	P
Life Hazard	Occupants	
	Firefighters	
Location/Fire	Fire Bldg/ Exposures on Arrival	
	After Arrival – Burn Time	
	Radiation/Conduction/Convection	
Construction	Fire Building	
	Exposures	
Occupancy (Contents)	Fire Building	
	Exposures	
Height	Fire Building (Front/Rear)	
	Exposures (Front/Rear)	
Area	Fire Building/Configuration	
	Proximity of Exposures /Config.	
Structural Collapse	Fire Building	
	Exposures	
	Collapse Zone	
	Apparatus Placement	
Weather	Visibility	
	Temperature/Humidity	
	Wind – Direction/Velocity	
Resource Requirement	Apparatus/Personnel/Equipment - RIC	
	Water Supply/Suppression Agent	
Auxiliary Appliances	Fire Building Supplied	
	Exposures Supplied	
Topography	Street Conditions	
Explosions/ Back Draft	Flash Over Conditions	
Time	Duration of Operations (Rest-Rehab) Time of Day Time of Alarm	

Column #2 Incident Objectives Attainable/ Measurable/ Flexible

Examples of Incident Objectives:

- Safe Removal of All Occupants.
- Contain and Control Fire to Room/Building of Origin.
- Contain, Control and Limit Fire in Exposures.
- Other.

List Incident Objectives:

1. _____
2. _____
3. _____
4. _____
5. _____
6. _____
7. _____
8. _____
9. _____
10. _____

Column #3 Activities (Strategies)

[R] Rescue
- Interior/Exterior/Both

[E] Exposure Protection
- Exposure Examination

[C/E] Confinement/Extinguishment
- Hose Line Replacement

[O] Overhaul
- Expose Hidden Fire

[V] Ventilation
- Removal of Occupants
- Fire Control

[S] Salvage
- Water – Run-Off
- Apply Covers

Forcible Entry
- Location
- Method

Special Equipment
- Imaging Cameras

List Incident Strategies	Assign To:
1.	
2.	
3.	
4.	
5.	
6.	
7.	
8.	
9.	
10.	

Column #4 Evaluate Effect of Activities (Strategies) Every 10 Minutes

Effective	Ineffective

Identify alternative strategies for firefighter safety when occupant safety has been determined not to be a Primary Factor.

- _____
- _____
- _____
- _____
- _____
- _____
- _____

UNIT 4: RESCUE, VENTILATION, SUPPORT, AND OVERHAUL

OBJECTIVES

The students will:

1. *Select appropriate ventilation tactics based on identified ventilation principles and tactical considerations.*

2. *Using the command sequence cycle, develop a ventilation action plan based on the incident presented.*

3. *Select appropriate rescue tactics based on identified rescue principles and tactical considerations.*

4. *Using the command sequence cycle, develop a rescue action plan based on the incident presented.*

5. *Understand the incident support activities that are necessary to promote safe fireground operations before, during, and after a fire.*

6. *Understand the necessary safe practices that need to be implemented during overhaul operations.*

RESCUE

Rescue is a systematic process used to safely locate, protect, and remove occupants and fire victims from a structure, and convey them to a place of safety.

Select Appropriate Rescue Tactic(s)

There are three basic rescue tactics: Conduct a primary search, conduct a secondary search, and provide for the rescued occupants.

Conduct Primary Search

A primary search is a rapid search of all areas involved in or exposed to fire, if they can be entered, to verify removal and/or safety of occupants. It is a quick search for live victims and should consider risk/benefit. It should be a routine function performed at every structure fire. An effective approach is to have an interior team search the immediate fire area and normal exit paths while an exterior team makes direct entry to upper floors from the outside, bypassing severe conditions in the fire area.

If possible, the search teams should work outward from the fire area. If not, they should work inward from normal entry points. Victims usually are found in routes they use to enter and exit, behind doors and under windows, and in bedrooms.

When removing victims, choose a method that will move people out of danger in the fastest and safest way. Usually this involves using the stairs. The **"all clear"** should be transmitted upon completion of the primary search.

Conduct Secondary Search

The secondary search is an extremely thorough search of the interior fire area after initial fire control, ventilation, and interior lighting are completed, to ensure that there is no possibility of victims remaining undiscovered. Often it is combined with overhaul, and may involve body recovery. Different teams should do primary and secondary searches, if possible. All spaces that could possibly hold a human being, including those not damaged by fire, must be examined.

Provide for Rescued Occupants

The best victim removal path is interior stairs, followed by escorting victims down exterior fire escapes. The least desirable method is to use ground or aerial ladders. After removal, victims should be taken to a triage area and treated and transported as required. It is also necessary to make provisions for uninjured, displaced persons.

Tactical Sizeup for Rescue

When making a rescue tactical sizeup, consider the stage of fire development; the number, location, and condition of victims; the effect of fire on victims; and the capability of onscene companies to enter building, protect or remove occupants, and control the fire.

The **stage of the fire** affects your approach to rescue. A simple interior primary search is all that is required at investigations. Minor fires require a primary search with attack lines. Primary search, attack lines, and support are needed at working offensive fires. Primary search in accessible areas should be completed in transitional fires where the mode is switching between offensive and defensive. No primary search occurs at defensive fires.

The **number, location, and condition of victims** and the effect the fire is likely to have on them affects the order of rescue. In general, victims are first rescued from the fire floor, then from the floor above, then from the top floor, and, finally, from the rest of the building.

The **capability of onscene companies** to enter the building, protect or remove occupants, and control the fire will have a significant effect on the successful outcome of the rescue effort.

Other sizeup questions that must be addressed by the Company Officer (CO) include the number and location of the victims, whether or not exits are accessible, the location and direction of travel of the fire, and the best method for reaching and protecting victims. It also is important to determine whether ventilation and/or protective hoselines can aid the rescue effort. Finally, the CO must identify any specific hazards to firefighters.

Support for Rescue Operations

Almost all support functions open the structure in some way and can magnify the problem, so **timing is critical**. Support should be just ahead of rescue to enable personnel to function where needed.

Protective lines serve two purposes. They protect firefighters and citizens by separating fire from people closest to it, by controlling interior stairways and corridors so firefighters can advance and occupants can be evacuated, and by protecting firefighters searching above and around fire areas. They also serve as guidelines to escape paths.

Rapid entry is required when fire threatens to cut off escape routes or has trapped victims. The most likely place to find occupants is in the path to doors they normally use.

Ventilation allows entry, increases safety of interior operations, and improves visibility. Ventilation must be coordinated with search, and protective lines should be in place before a search begins. Opening the roof assists rescue and attack; rapid ventilation by exterior ladders can support interior search.

Portable and aerial ladders should be raised if and where needed to place personnel on upper floors, remove occupants, lower the injured, and provide a secondary means of egress.

The best way to protect occupants is to put the fire out. Therefore, **confinement and extinguishment** efforts should be initiated as soon as possible, but outside streams should not be used in occupied buildings.

Rescue Coordination Issues

Teamwork, organization, and good communication are vital to effective operations. Use rapid ventilation to prevent further buildup of products of combustion, being careful not to draw them toward occupants. Use the first hoseline to keep fire away from people, and advance other lines to protect escape routes. Laddering may be necessary to ventilate and advance protective hoselines.

VENTILATION

Nearly all structure fires require ventilation to support basic tactical operations (rescue and advancement of lines). The CO must understand how fire behavior affects the time and place to ventilate. Because firefighters work in close proximity to the fire, safe tactics and procedures must be established and followed.

Entry followed by search and rescue takes precedence over every other strategic goal at the incident scene. CO's must develop proficiency in rescue operations because of their overriding importance.

Ventilation and rescue should be **safe**, **timely**, and **efficient** operations. Many firefighters are killed and injured each year while performing them. CO's who understand and apply risk/benefit concepts to their operations reduce the likelihood of firefighter injury or death. Company integrity and accountability always must be in the CO's mind.

Ventilation is a planned and systematic procedure designed to reduce, redirect, or remove heat, smoke, and fire gases from a structure, and replace them with clean, fresh air.

Ventilation Principles

There are four basic principles that guide ventilation decisions. Considering incident priorities, ventilation may be needed for life safety, incident stabilization, property conservation, or to support other tactical operations, in that order.

Ventilation for life safety involves channeling heat, smoke, and gases away from victims, while allowing firefighters to enter and rescue them. Its need is based on life hazard, and heat, smoke, and fire conditions in the structure.

Ventilation for incident stabilization allows firefighters access to the structure so they can locate and attack the fire and limit extension. Its need is based on exposures, the extent and location of fire, wind direction, and construction features of the building, including vertical and horizontal openings.

Ventilation for property conservation channels products of combustion away from unburned, undamaged property to allow firefighters to salvage it. Its success is dependent on the CO's knowledge of methods.

Finally, ventilation may be needed in order **to support other critical tactical operations effectively**. Decisions about where ventilation is needed and the method used are guided by which tactical operation(s) need support.

Determine Where Ventilation is Needed

A planned, systematic approach for determining where to ventilate first considers the location and condition of possible victims, as well as the type, age, and structural integrity of the building, and the type and style of roof. The rate of burning and possible paths of fire travel, safe routes of travel, and escape routes, and needed and available resources also should be considered.

Products of combustion should be channeled away from occupants, and removed from above stairways, hallways, over the fire, and the rest of the building in that order.

Select Appropriate Tactic(s)

The type of ventilation should be matched to the fire and smoke conditions encountered, construction and condition of the building, weather conditions, the available resources, and the time restriction placed on the operation by other tactical requirements.

Horizontal ventilation, normally through windows and doors, is appropriate for minor to moderate fires, as long as heat and/or products of combustion would not be pushed toward occupants attempting to evacuate. By minor to moderate, we mean low percentages of involvement, relatively small buildings, and low fire intensity. For example, fires that involves a volume no larger than one to two rooms of an ordinary dwelling generally can be handled with horizontal ventilation. An exception may be an attic fire due to the limited number of horizontal openings. Horizontal ventilation takes advantage of existing openings and can be performed from the ground with portable ladders, or from the interior.

Vertical ventilation through roof openings is more efficient because it takes advantage of the natural tendency of heated materials to rise. It usually slows horizontal extension, but requires longer ladders, more personnel, and generally is not as safe. If possible, natural roof openings such as vertical shafts, skylights, hatches, ventilators, and penthouse openings should be used. If not, firefighters should make openings. Vertical ventilation normally is required in larger fires, provided there is a

path for the heat and smoke to travel to the roof assembly and ventilation hole from the fire area in the structure. An important consideration for vertical ventilation is the likelihood that the fire and/or heat can push horizontally through the structure. Vertical ventilation stops or significantly reduces this horizontal spread.

In some situations, it is appropriate to use a **combination of horizontal and vertical ventilation**. For example, when there is smoke in a basement, use a fan blowing air down the stairs (vertical ventilation) to force smoke out at the first floor and use horizontal ventilation to remove the smoke from the first floor.

Ventilation Methods

There are two basic methods for moving heat and combustion products to the outside of a structure--natural and forced (mechanical) ventilation.

Natural ventilation takes advantage of natural convection currents in the building or those created when firefighters make openings.

Natural ventilation often is inadequate, due to lack of horizontal paths and openings, lack of vertical paths, a prevailing wind that hinders ventilation, high humidity, life or property exposures, and in fires of low heat intensity. Poor ventilation is indicated when the smoke and heat are not leaving the building as rapidly as needed to conduct effective interior operations.

The earliest form of natural ventilation was **self-ventilation**. This method involves simply allowing the fire to continue to burn and find its most direct path to the outside. It is sometimes the safest and most effective method.

Forced, or mechanical ventilation uses mechanical devices to **force** contaminants out of the structure and replace them with fresh air. **Water fog streams** are the simplest, but least effective type of mechanical ventilation because they have the potential for high water damage and must be used in contaminated atmospheres.

When available, **building heating, ventilating, and air conditioning (HVAC) systems** may be used to ventilate, but their effectiveness is dependent on system capabilities and knowledgeable operators. They also can move contaminants to unaffected parts of the building.

Negative pressure ventilation uses a blower placed inside the building to **exhaust** contaminants while bringing in fresh air through other openings. Although this method works satisfactorily, it has disadvantages. Personnel are exposed to hazardous contaminants while positioning the blower. Depending on their placement, blowers can interfere with the movement of personnel. The smoke may churn around the blower and opening, and there often is limited flow of air at the top of the area being ventilated.

With **positive-pressure ventilation**, blowers are placed outside the building and fresh, pressurized air is **forced into** the building. Because pressure is uniform in the structure, contaminants are forced from controlled openings in all parts of the building.

Positive-pressure ventilation may be desirable because access to the building and in the building is not blocked by the blowers, the blowers can be set up in less time and more safely in noncontaminated areas, and products of combustion are removed more efficiently. A disadvantage is the danger of fanning a smoldering fire into a serious one. Positive-pressure ventilation requires a high degree of coordination and proper sequence of opening and closing windows as each room is cleared.

Proper ventilation requires knowledge of the advantages and disadvantages of each method. The CO must select a method appropriate to the specific incident.

Tactical Sizeup for Ventilation

Ventilation must be performed as part of the overall attack plan. Begin ventilation as soon as a life hazard is recognized. If fire is free burning, begin ventilation at the same time as, or shortly after, initial attack. If there is danger of backdraft or flashover, ventilate before entry and as high as possible. Ventilation is an effective method of reducing the flashover potential or minimizing its effect. Flashover is a phenomenon that occurs in the early stages of a fire, when the heated contents of a space produce sufficient gaseous fuels in the presence of sufficient oxygen to cause rapid combustion throughout the involved space. In a backdraft situation, vertical ventilation over the fire is the best method of moving the high temperature components out of the building and reducing the internal temperatures. Backdraft can occur either during the early stages of a fire or during the smoldering phase when the heated contents of a space produce sufficient gaseous fuels, and the oxygen content is below that which is necessary for rapid combustion to take place. Both situations (flashover and backdraft) will require the application of water immediately

after ventilation is accomplished. Follow the Tactical Action Model when carrying out ventilation assignments.

When completing the initial sizeup the CO must consider whether ventilation is needed for life safety, incident stabilization, property conservation, and/or to support other tactical operations. After determining the reason, it is necessary to decide where it is needed. Finally, the specific ventilation tactic is selected.

Continuing sizeup is required to monitor changing conditions so tactical operations can be adjusted. The CO should inform others of information that might affect their operations.

CO's must communicate with their immediate supervisor when their ventilation assignment is completed, or if it cannot be completed. It also is necessary to notify the supervisor if additional resources are needed, to give advance warning of need for relief crews, and when crews are available for reassignment. Periodic status reports enable the supervisor to manage the incident more effectively.

Support for Ventilation

The CO should consider proper apparatus placement, hoseline placement, and entry techniques in support of ventilation efforts. Apparatus should be positioned so that truck companies have ready access to the fire area and areas above the fire. Hoselines should be placed between any occupants and the fire to be ready for increased intensity as ventilation allows more oxygen into the fire area. Forcible entry must be made at the right place to effect ventilation as well as to support the advancement or placement of hoselines. Selection and placement of ladders, adequate lighting, and a replacement supply of breathing air also may be necessary.

Ventilation Hazards

The CO should be aware of the hazards introduced into ventilation operations by opening below the fire, opening too soon, opening in the wrong place, or opening into a blind attic. Opening below the fire may draw the fire toward entering firefighters or exiting civilians. Opening before hoselines are ready to check increased fire intensity may allow the fire to gain considerable headway as it extends unchecked. Opening a building in the wrong place can draw the fire toward unburned areas or areas where civilians and firefighters are. Opening into a blind attic (one without other openings), especially from below, can cause a sudden flashover or backdraft to occur. Firefighters must coordinate hoseline placement and ventilation efforts when pulling a blind attic ceiling from

below. When the ceiling is pulled, the fire will intensify. Without hose-lines and ventilation, this fire easily can blow down on the firefighters pulling the ceiling, causing injury or death. Insufficient openings--ones that endanger exposures--or openings delayed too long also are hazards.

Ventilation Coordination Issues

Coordinating ventilation with rescue should receive the highest priority. It improves the environment for victims and firefighters. Ventilation also should be coordinated with entry and fire attack. Opening too early will increase fire spread and damage. Opening too late will make extinguishing the fire more difficult and will increase risk to firefighters.

Allowing hoselines to hinder ventilation is a fundamental tactical error. Examples include hose streams in roof openings, opposing hoselines, and lines being operated from the outside and the steps in basement fires.

SUPPORT ACTIVITIES

Support activities are special tasks carried out to support ongoing tactical operations. This is a "tool box" concept. There are many support functions but not all of them are indicated at every fire. The CO must know what is available and what is needed.

The principles of support activities include controlling all utilities, providing compressed breathing air, lighting the emergency incident, providing electricity to operate tools, and providing for firefighter rehabilitation, rehydration, medical monitoring, and treatment. All of these activities enhance firefighter safety.

Utility Control

Before risking the safety of firefighters, the CO must assure that personnel are not exposed to the dangers of electrical injury or gas explosion. Even though the pressure to make an attack on the fire may be great, do not overlook the need to control utilities first.

As a CO on the fireground, one responsibility is to attend to the special problems and hazards posed by electrical, natural gas, and water utilities. Control of the utilities leading into the fireground is a serious command responsibility and usually requires prompt attention during initial fire-control activities. The CO must consider the effect of fire damage to various buildings and utility systems from both property conservation and a safety point of view.

The utilities most often involved at a fire scene are electric service, natural or liquefied petroleum gas (LPG), water, and fuel oil storage.

When these utilities are threatened or damaged by the development of the fire, building maintenance personnel or utility employees should shut them down at the point of entry into the fireground. If fire department personnel must shut off utilities they should not turn them back on. This requires that the fire department maintain a close working relationship with the utility companies and have a working knowledge of the methods of controlling utility shutdown in its fire district.

The CO's role in utility control is to evaluate the problem and develop a plan. A good plan should be developed as soon as possible, often as soon as the laying of the first hoseline from a hydrant. A good prefire plan for utility control should address electrical shutoff, LPG or natural gas shutoff, fuel oil storage location and shutoff, water control locations, and other considerations.

Components of the plan should include

- types of utilities involved and their control;
- potential for utility damage;
- type of building;
- utility requirements to support fire operations;
- occupancy; and
- resource requirements.

The complexity of the utility problem will be proportional to the complexity of the occupancy. Before the arrival of utility company representatives the CO must consider the effect of utility shutdown on both the occupants of the building and on further fire control operations. Shutdown of electrical power to a highrise apartment building prior to the completion of search and rescue or evacuation operations can cause confusion and panic. Shutdown also will eliminate the use of elevators for the transport of fire personnel and equipment to the vicinity of the fire.

The CO assigned to utility control must coordinate with the IC and other working divisions before action is taken. Upon arrival on the fire scene, utility representatives should be directed to report to the IC prior to taking any action. Access for utility vehicles must be part of the overall apparatus placement plan.

This support activity usually requires only one or two fire personnel to implement. It is generally of short duration, and has been completed when the utilities are located, shut off, and secured. At the conclusion of the utility shutdown, the CO should report to the IC and be prepared to

assume another assignment. However, the utility shutdown is not accomplished until it is actually done. Until that moment, the CO must observe the development of the fire operation and adjust the utility plan accordingly.

Air Supply

Air supply at fire incidents is a major concern. For every self-contained breathing apparatus (SCBA) placed in service at least one spare bottle should be provided. Special incidents such as large fires, hazardous material incidents, and confined space rescues may require several bottle changes. Air may be supplied by filling at the station, filling on scene, or use of private companies such as dive shops. Whichever system is being used, the department must have 24-hour access; preplanning is essential.

When using compressors on the scene, special care must be taken to assure that the compressor system is not located near contaminated air sources. Often air filling and charging stations can be located and coordinated with firefighting rehabilitation and medical treatment areas.

Electricity

Another function of support is the provision of lights and electricity on the scene. Any time crews must work in the dark, the risk of injuries increases. Every effort possible must be made to provide lights for nighttime operations and for crews in dark areas.

Responder Rehabilitation

The IC should consider responder rehab during the initial planning stages of an emergency response. However, the climatic or environmental conditions of the emergency scene should not be the sole justification for establishing responder rehab. Any activity/incident that is large in size, long in duration, and/or labor intensive will deplete the energy and strength of personnel rapidly, and therefore merits consideration for responder rehab.

A critical factor in the prevention of heat injury is the maintenance of water and electrolytes. Water must be replaced during exercise periods and at emergency incidents. During heat stress, the member should consume at least 1 quart of water per hour. The rehydration solution should be a 50/50 mixture of water and a commercially prepared activity beverage, administered at about 40°F (4.4°C). Alcohol, caffeine, and

carbonated beverages should be avoided, as they interfere with the body's water conservation mechanisms.

Food should be provided at the scene of an extended incident of 3 or more hours' duration. A cup of stew, soup, or broth is highly recommended because it is digested much faster than sandwiches and fast food products. Fatty and/or salty foods should be avoided.

The "two air bottle rule," or 45 minutes of work time, is recommended as an acceptable level prior to mandatory rehabilitation. Members shall rehydrate (at least 8 ounces) while SCBA cylinders are being changed. Firefighters, having worked for two full 30-minute-rated bottles, or 45 minutes, shall be placed immediately in responder rehab for rest and evaluation. Rest shall not be less than 10 minutes and may exceed an hour as determined by the responder rehab manager. Crews released from rehab shall be available in Staging to ensure that fatigued members are not required to return to duty before they are rested, evaluated, and released by the responder rehab manager.

Members in the rehab area should maintain a high level of hydration. Members should not be moved from a hot environment directly into an air-conditioned area, because the body's cooling system can shut down in response to the external cooling.

Emergency Medical Services (EMS) should be provided and staffed by the most highly trained and qualified EMS personnel on the scene (at a minimum of basic life support (BLS) level). The heart rate should be measured for 30 seconds as early as possible in the rest period. If the member's heart rate exceeds 110 beats per minute, an oral temperature should be taken. If the member's temperature exceeds 100.6°F (38°C), he/she should not be permitted to wear protective equipment. If it is below 100.6°F, and the heart rate remains above 110 beats per minute, **rehabilitation time should be increased.** All medical evaluations shall be recorded on standard forms along with the member's name and complaints; they must be signed, dated, and timed by the responder rehab manager or his/her designee.

Members assigned to responder rehab shall enter and exit as a crew. The crew designation, number of crewmembers, and the times of entry and exit from the responder rehab area shall be documented on the company's check-in/out sheet. Crews shall not leave the responder rehab area until authorized by the responder rehab manager.

OVERHAUL OPERATIONS

Overhaul is the action taken to expose hidden fire and to assure complete extinguishment. The principles of overhaul include total extinguishment of all smoldering fires and checking for and extinguishing all hidden fires and extension.

Overhaul Tactics

Overhaul tactics include searching for any **hidden fires** that may have extended into walls, ceilings, lofts, or voids. A thorough search for any signs of **extension** must be made. Hot walls, discoloration of paint, noticeable smokes coming from the void, or sounds of burning must be inspected for possible extension. **If hot open it up**. Small inspection holes can be made; then, if the CO finds any possibility of extension or fire in these void spaces, they must be opened up.

Many departments have terminated an incident only to be recalled later for a "**rekindle**." Rekindles are very embarrassing to a department's image. By returning to a rekindle, the department is returning to a fire that was never extinguished.

Finally, when completing overhaul operations, consideration must be given to **safety**. All salvage operations must be completed in full turnout with SCBA. Many fire officers assume that once the fire is extinguished the air is safe to breathe. Studies show the highest levels of toxic gases, including carbon monoxide, are present just after extinguishment and during overhaul. If the fire is still smoldering or if there is hidden fire, there are many dangers that support the use of full protective equipment, including SCBA. The CO also must ensure that the area in which personnel are working is safe. Conditions such as unstable roofs, walls, or floors present major hazards. Additionally, burned out stairwells, holes in floors, and unprotected vertical openings may be present. The CO must do everything possible to assure the area is safe for overhaul operations.

Coordination

Often overhaul is coordinated with salvage tactics. Overhaul operations provide a good opportunity for crews to separate undamaged from damaged property. While performing overhaul tactics, it is necessary to coordinate with origin/cause investigators so that evidence is identified and protected.

ACTIVITIES

Activity 4.1

Rescue Tactics

Purpose

To learn where to use the command sequence cycle to develop an action plan for rescue operations.

Directions

1. The class will be divided into table groups.

2. There are three activities for rescue operations.

3. A floor/plot plan is in the Student Manual (SM) for each occupancy. The floor/plot plans show the amount of involvement in the building.

4. You will be shown several slides of the building's various sides and one slide showing smoke and/or fire.

5. The instructor will assign one scenario to each group. Look at your floor/plot plans for the scenario.

6. Each group will develop a rescue action plan using the command sequence cycle for its assigned scenario. Use the Primary Factors Chart and complete the Student Activity Worksheet.

7. Groups will be required to report back to the class their action plans using the command sequence cycle.

8. Each group has 10 minutes to complete its assignment.

Activity 4.1 (cont'd)

Scenario 1

122 M Street

Building Description:

50' x 90', three-story, Type V, wood-frame construction.

Occupancy Type: Garden apartment complex.

One section, four apartments per floor--total 12 apartments.

Fire Location: 122 M St.

Fire is in the third floor rear apartment. Involvement is approximately 50 percent. Heavy smoke third floor.

Report of Occupants:

Two occupants reported trapped in third floor front bedroom, Side C.

Time:

0100 hours.

Water Available:

Hydrant area, hydrants at every corner, system flow = 2,500 gpm.

Resources Available:

1st Alarm:
E-1
E-2
E-3
T-1
SQ-1
BC-1

Staffing: Four firefighters per apparatus.

Plot Plan

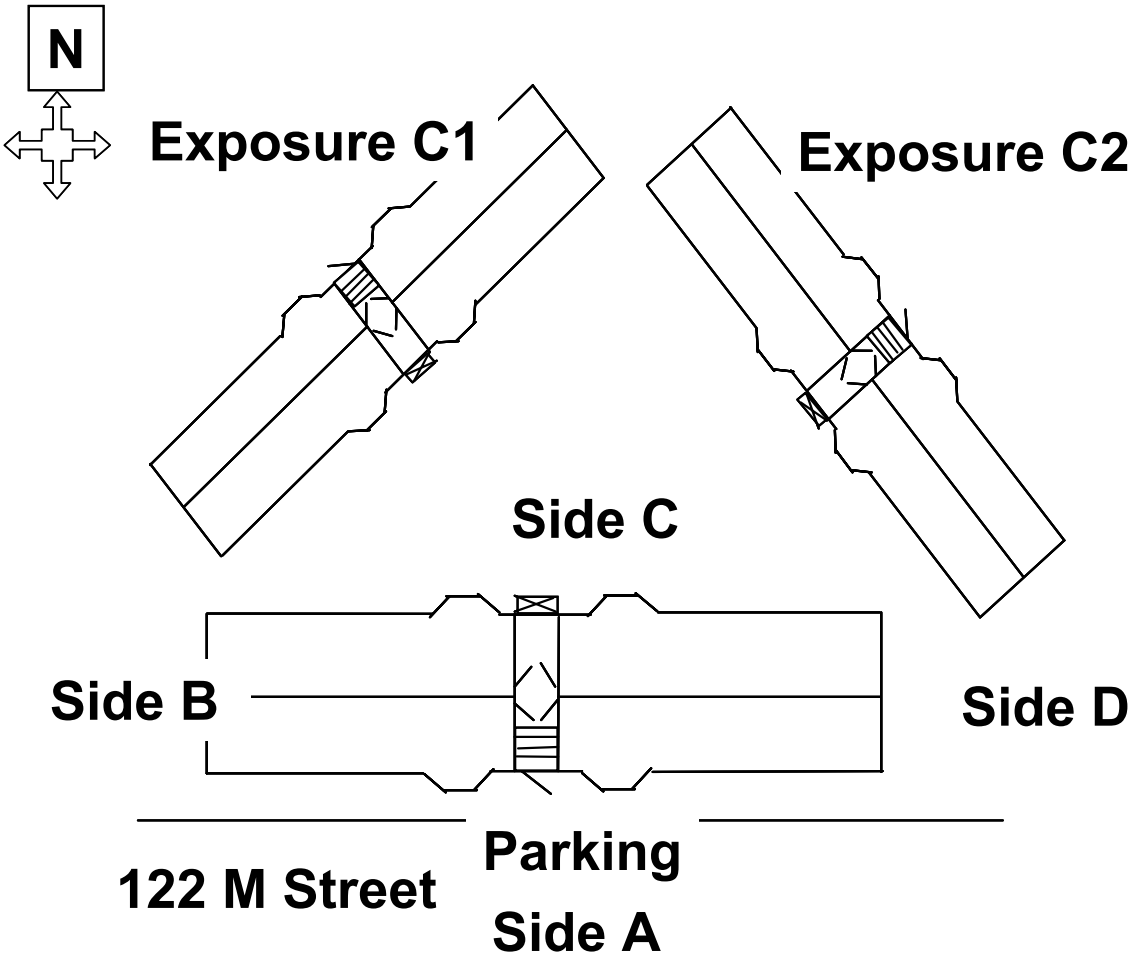
N
Exposure C1
Exposure C2
Side C
Side B
Side D
Parking
122 M Street
Side A

Floor Plan

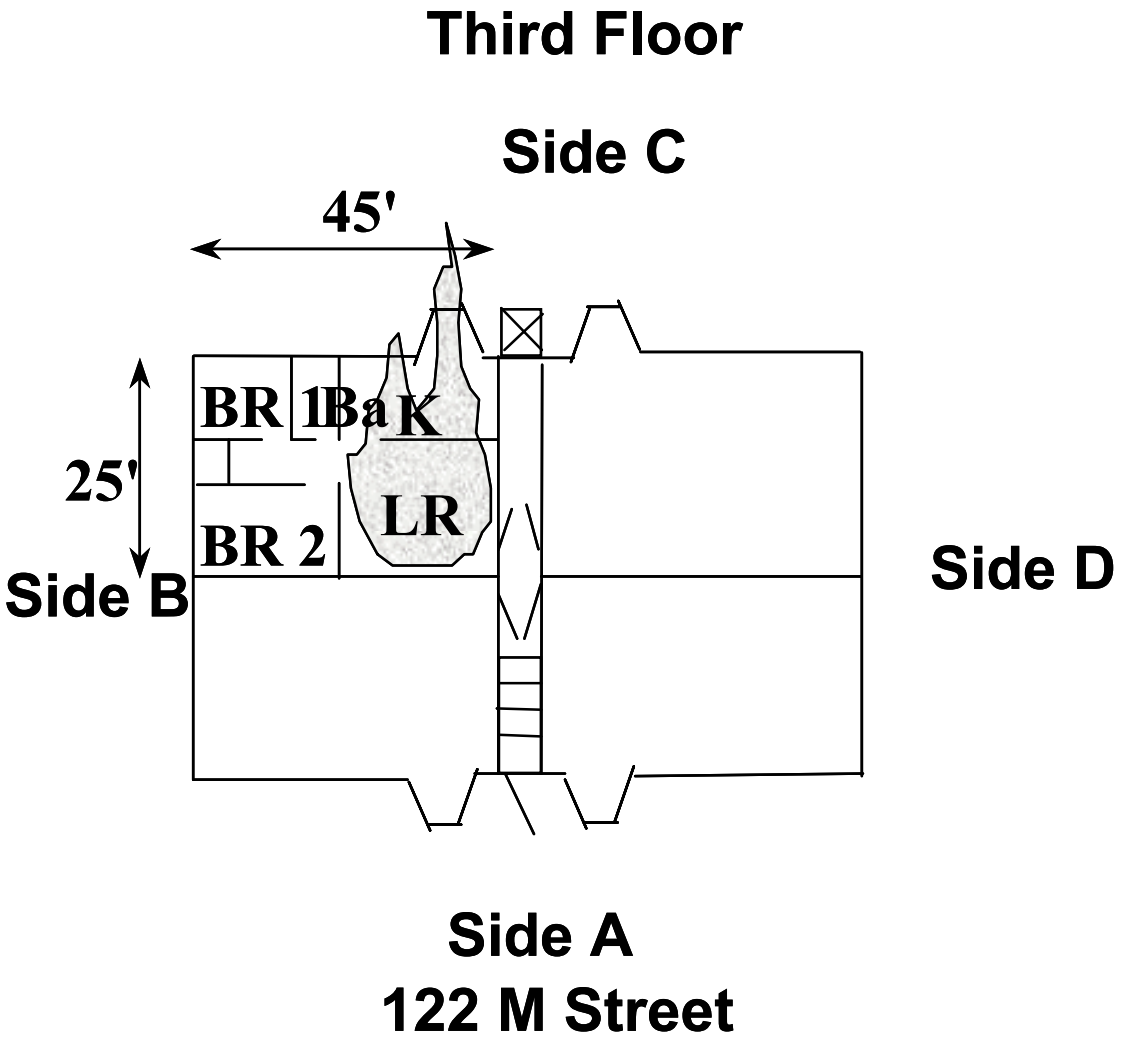
Third Floor
Side C
45'
25'
BR 1
Ba
K
LR
BR 2
Side B
Side D
Side A
122 M Street

Column #1 Primary Factor Size-Up Chart		
Pertinent Factors (P)	(Check appropriate boxes)	P
Life Hazard	Occupants	
	Firefighters	
Location/Fire	Fire Bldg/ Exposures on Arrival	
	After Arrival – Burn Time	
	Radiation/Conduction/Convection	
Construction	Fire Building	
	Exposures	
Occupancy (Contents)	Fire Building	
	Exposures	
Height	Fire Building (Front/Rear)	
	Exposures (Front/Rear)	
Area	Fire Building/Configuration	
	Proximity of Exposures /Config.	
Structural Collapse	Fire Building	
	Exposures	
	Collapse Zone	
	Apparatus Placement	
Weather	Visibility	
	Temperature/Humidity	
	Wind – Direction/Velocity	
Resource Requirement	Apparatus/Personnel/Equipment - RIC	
	Water Supply/Suppression Agent	
Auxiliary Appliances	Fire Building Supplied	
	Exposures Supplied	
Topography	Street Conditions	
Explosions/ Back Draft	Flash Over Conditions	
Time	Duration of Operations (Rest-Rehab) Time of Day Time of Alarm	

Column #2 Incident Objectives Attainable/ Measurable/ Flexible

Examples of Incident Objectives:

- Safe Removal of All Occupants.
- Contain and Control Fire to Room/Building of Origin.
- Contain, Control and Limit Fire in Exposures.
- Other.

List Incident Objectives:

1. _____
2. _____
3. _____
4. _____
5. _____
6. _____
7. _____
8. _____
9. _____
10. _____

Column #3 Activities (Strategies)

[R] Rescue
- Interior/Exterior/Both

[E] Exposure Protection
- Exposure Examination

[C/E] Confinement/Extinguishment
- Hose Line Replacement

[O] Overhaul
- Expose Hidden Fire

[V] Ventilation
- Removal of Occupants
- Fire Control

[S] Salvage
- Water – Run-Off
- Apply Covers

Forcible Entry
- Location
- Method

Special Equipment
- Imaging Cameras

List Incident Strategies	Assign To:
1.	
2.	
3.	
4.	
5.	
6.	
7.	
8.	
9.	
10.	

Column #4 Evaluate Effect of Activities (Strategies) Every 10 Minutes

Effective	Ineffective

Identify alternative strategies for firefighter safety when occupant safety has been determined not to be a Primary Factor.

- _____
- _____
- _____
- _____
- _____
- _____
- _____

Command Sequence Cycle:

Sizeup:

Objective(s):

Strategy(ies):

Tactics:

Implement:

Evaluate:

Activity 4.1 (cont'd)

Scenario 2

700 Block of 25th Street

Building Description:

21' x 45', two-story, Type III, ordinary construction.

Occupancy Type: Row houses.

Seven row houses.

Fire Location: 700 Block, 25th St.

Fire started in the first floor living room. Involvement is 50 percent of the first floor of one row house. Heavy smoke first and second floor fire building, medium smoke exposures B and D.

Report of Occupants:

Report of two elderly occupants trapped in second floor front bedroom.
Report of two young children trapped in second floor rear bedroom.
Report of an invalid living in B exposure, 2nd floor rear bedroom.
No communication with occupants in exposure D.

Time:

2200 hours.

Water Available:

Hydrant area, hydrants at every corner, system flow--1,500 gpm.

Resources Available:

1st Alarm:
E-1
E-2
E-3
T-1
SQ-1
BC-1

Staffing: four firefighters per apparatus.

Floor Plan

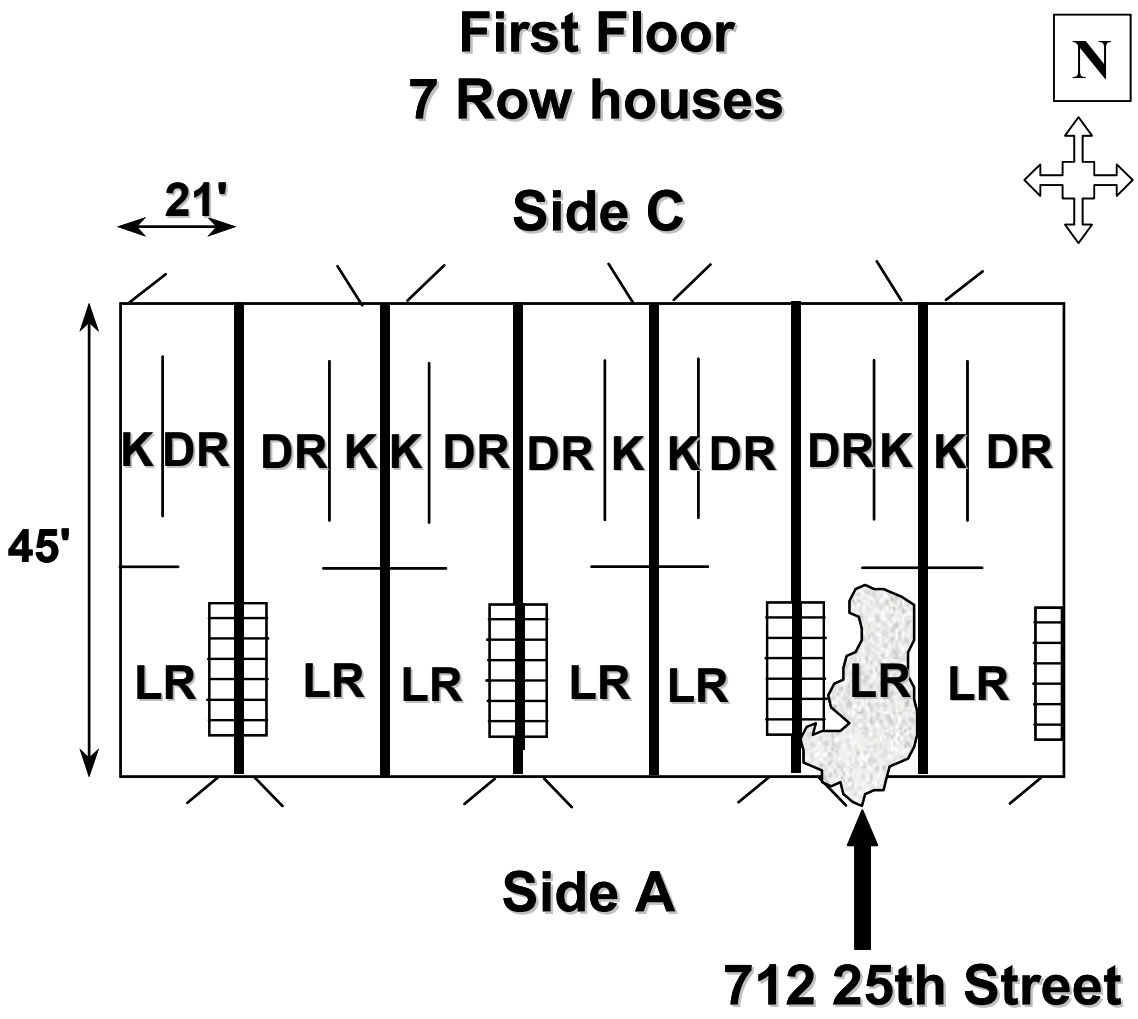
First Floor
7 Row houses
N
21'
Side C
45'
K DR
DR K
K DR
DR K
K DR
DR K
K DR
LR
LR
LR
LR
LR
LR
LR
Side A
712 25th Street

Column #1 Primary Factor Size-Up Chart

Pertinent Factors (P)	(Check appropriate boxes)	P
Life Hazard	Occupants	
	Firefighters	
Location/Fire	Fire Bldg/ Exposures on Arrival	
	After Arrival – Burn Time	
	Radiation/Conduction/Convection	
Construction	Fire Building	
	Exposures	
Occupancy (Contents)	Fire Building	
	Exposures	
Height	Fire Building (Front/Rear)	
	Exposures (Front/Rear)	
Area	Fire Building/Configuration	
	Proximity of Exposures /Config.	
Structural Collapse	Fire Building	
	Exposures	
	Collapse Zone	
	Apparatus Placement	
Weather	Visibility	
	Temperature/Humidity	
	Wind – Direction/Velocity	
Resource Requirement	Apparatus/Personnel/Equipment - RIC	
	Water Supply/Suppression Agent	
Auxiliary Appliances	Fire Building Supplied	
	Exposures Supplied	
Topography	Street Conditions	
Explosions/ Back Draft	Flash Over Conditions	
Time	Duration of Operations (Rest-Rehab) Time of Day Time of Alarm	

Column #2 Incident Objectives Attainable/ Measurable/ Flexible

Examples of Incident Objectives:

- Safe Removal of All Occupants.
- Contain and Control Fire to Room/Building of Origin.
- Contain, Control and Limit Fire in Exposures.
- Other.

List Incident Objectives:

1. _____
2. _____
3. _____
4. _____
5. _____
6. _____
7. _____
8. _____
9. _____
10. _____

Column #3 Activities (Strategies)

[R] Rescue
- Interior/Exterior/Both

[E] Exposure Protection
- Exposure Examination

[C/E] Confinement/Extinguishment
- Hose Line Replacement

[O] Overhaul
- Expose Hidden Fire

[V] Ventilation
- Removal of Occupants
- Fire Control

[S] Salvage
- Water – Run-Off
- Apply Covers

Forcible Entry
- Location
- Method

Special Equipment
- Imaging Cameras

List Incident Strategies	Assign To:
1.	
2.	
3.	
4.	
5.	
6.	
7.	
8.	
9.	
10.	

Column #4 Evaluate Effect of Activities (Strategies) Every 10 Minutes

Effective	Ineffective

Identify alternative strategies for firefighter safety when occupant safety has been determined not to be a Primary Factor.

- _____
- _____
- _____
- _____
- _____
- _____
- _____

Command Sequence Cycle:

Sizeup:

Objective(s):

Strategy(ies):

Tactics:

Implement:

Evaluate:

Scenario 3

356 E Street

Building Description:

35' x 90', three-story with an attic, Type III, ordinary construction.

Two stair shafts, one at the lobby and one at Side C.

Occupancy Type: Boarding house.

Fire Location: 356 E St.

Fire is on the second floor, second room Side D. Room involvement is 100 percent. Percentage of floor involved is 10 percent. Heavy smoke conditions second and third floors.

Report of Occupants:

Two occupants occupy each room. 14 occupants per floor. Report of many occupants unaccounted for.

Time:

0300 hours

Water Available:

Hydrant area, hydrants at every corner, system flow = 1,000 gpm.

Resources Available:

1st Alarm:
E-1
E-2
E-3
T-1
SQ-1
BC-1

Staffing: four firefighters per apparatus.

Floor Plan

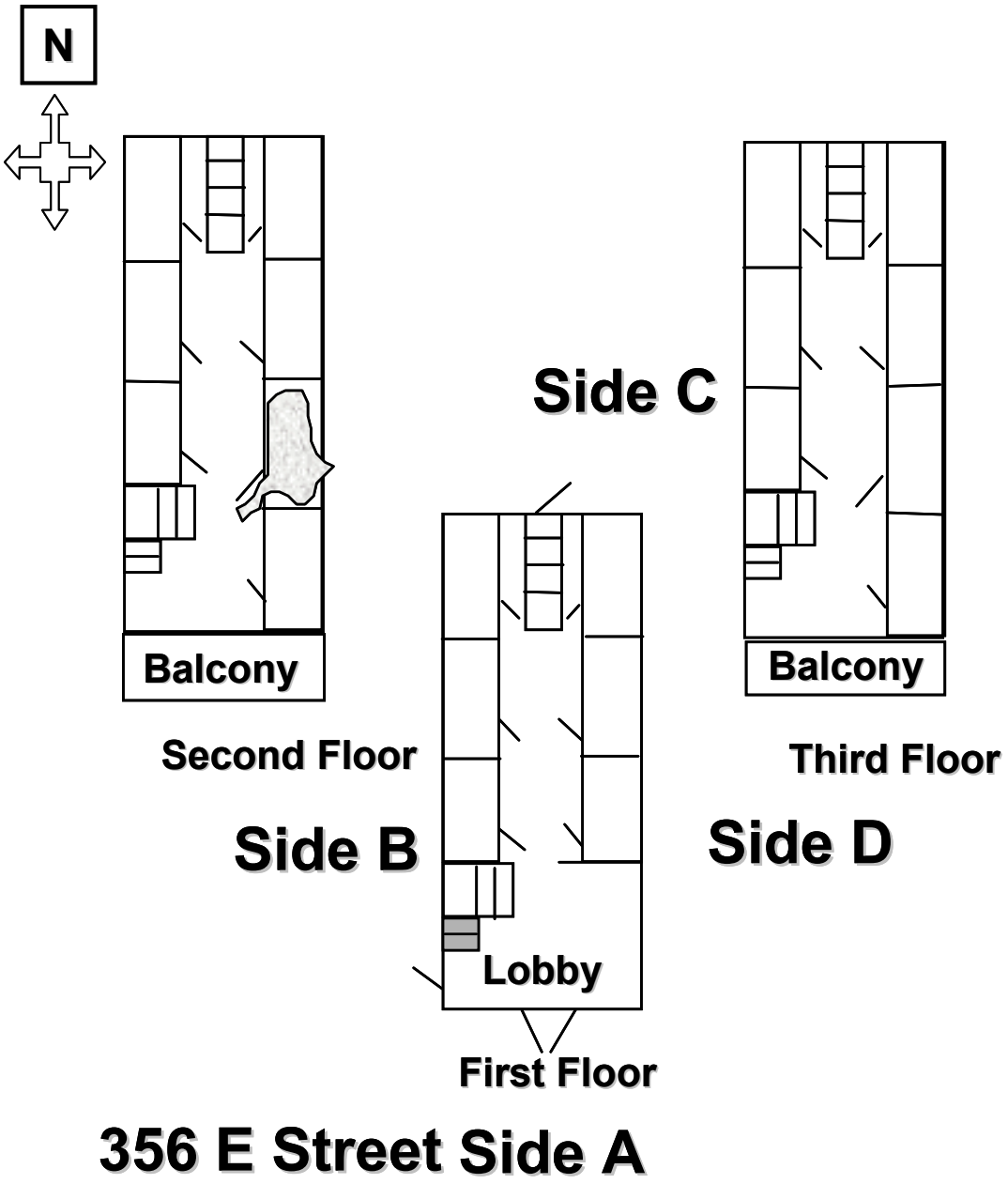
N
Balcony
Second Floor
Side C
Balcony
Third Floor
Side B
Side D
Lobby
First Floor
356 E Street Side A

Column #1 Primary Factor Size-Up Chart

Pertinent Factors (P)	(Check appropriate boxes)	P
Life Hazard	Occupants	
	Firefighters	
Location/Fire	Fire Bldg/ Exposures on Arrival	
	After Arrival – Burn Time	
	Radiation/Conduction/Convection	
Construction	Fire Building	
	Exposures	
Occupancy (Contents)	Fire Building	
	Exposures	
Height	Fire Building (Front/Rear)	
	Exposures (Front/Rear)	
Area	Fire Building/Configuration	
	Proximity of Exposures /Config.	
Structural Collapse	Fire Building	
	Exposures	
	Collapse Zone	
	Apparatus Placement	
Weather	Visibility	
	Temperature/Humidity	
	Wind – Direction/Velocity	
Resource Requirement	Apparatus/Personnel/Equipment - RIC	
	Water Supply/Suppression Agent	
Auxiliary Appliances	Fire Building Supplied	
	Exposures Supplied	
Topography	Street Conditions	
Explosions/ Back Draft	Flash Over Conditions	
Time	Duration of Operations (Rest-Rehab) Time of Day Time of Alarm	

Column #2 Incident Objectives Attainable/ Measurable/ Flexible

Examples of Incident Objectives:

- Safe Removal of All Occupants.
- Contain and Control Fire to Room/Building of Origin.
- Contain, Control and Limit Fire in Exposures.
- Other.

List Incident Objectives:

1. _____
2. _____
3. _____
4. _____
5. _____
6. _____
7. _____
8. _____
9. _____
10. _____

Column #3 Activities (Strategies)

[R] Rescue
- Interior/Exterior/Both

[E] Exposure Protection
- Exposure Examination

[C/E] Confinement/Extinguishment
- Hose Line Replacement

[O] Overhaul
- Expose Hidden Fire

[V] Ventilation
- Removal of Occupants
- Fire Control

[S] Salvage
- Water – Run-Off
- Apply Covers

Forcible Entry
- Location
- Method

Special Equipment
- Imaging Cameras

List Incident Strategies	Assign To:
1.	
2.	
3.	
4.	
5.	
6.	
7.	
8.	
9.	
10.	

Column #4 Evaluate Effect of Activities (Strategies) Every 10 Minutes

Effective	Ineffective

Identify alternative strategies for firefighter safety when occupant safety has been determined not to be a Primary Factor.

- _____
- _____
- _____
- _____
- _____
- _____
- _____

Command Sequence Cycle:

Sizeup:

Objective(s):

Strategy(ies):

Tactics:

Implement:

Evaluate:

Activity 4.2

Ventilation

Purpose

To learn where to use the command sequence cycle to develop an action plan for ventilation operations for selected occupancies.

Directions

1. The class will be divided into table groups.

2. There are three activities for ventilation operations.

3. A floor/plot plan is in the SM for each occupancy. The floor/plot plans show the amount of involvement in the building.

4. You will be shown several slides of the building's various sides and one slide showing smoke and/or fire.

5. The instructor will assign one scenario to each group. Look at your floor/plot plans for the scenario.

6. Each group will develop a ventilation action plan using the command sequence cycle for its assigned scenario. Use the Primary Factors Chart and complete the Student Activity Worksheet.

7. Groups will be required to report back to the class their action plans using the command sequence cycle.

8. Each group has 10 minutes to complete its assignment.

Activity 4.2 (cont'd)

Scenario 1

246 10th Street

Building Description:

21' x 50', three-story, Type III, ordinary construction.

Open stair shaft.

Occupancy Type: Office building.

Connected to a three-story warehouse and two-story warehouse both of ordinary construction.

Fire Location: 246 10th St.

Fire is on the second floor at the rear of the office building. Involvement is approximately 35 percent. Medium smoke conditions, both warehouses.

Report of Occupants:

All occupants have been removed.

Time:

1000 hours

Water Available:

Hydrant area, hydrants at every corner, system flow = 8,000 gpm.

Resources Available:

1st Alarm:
E-1
E-2
E-3
T-1
SQ-1
BC-1

Staffing: four firefighters per apparatus.

Floor Plan

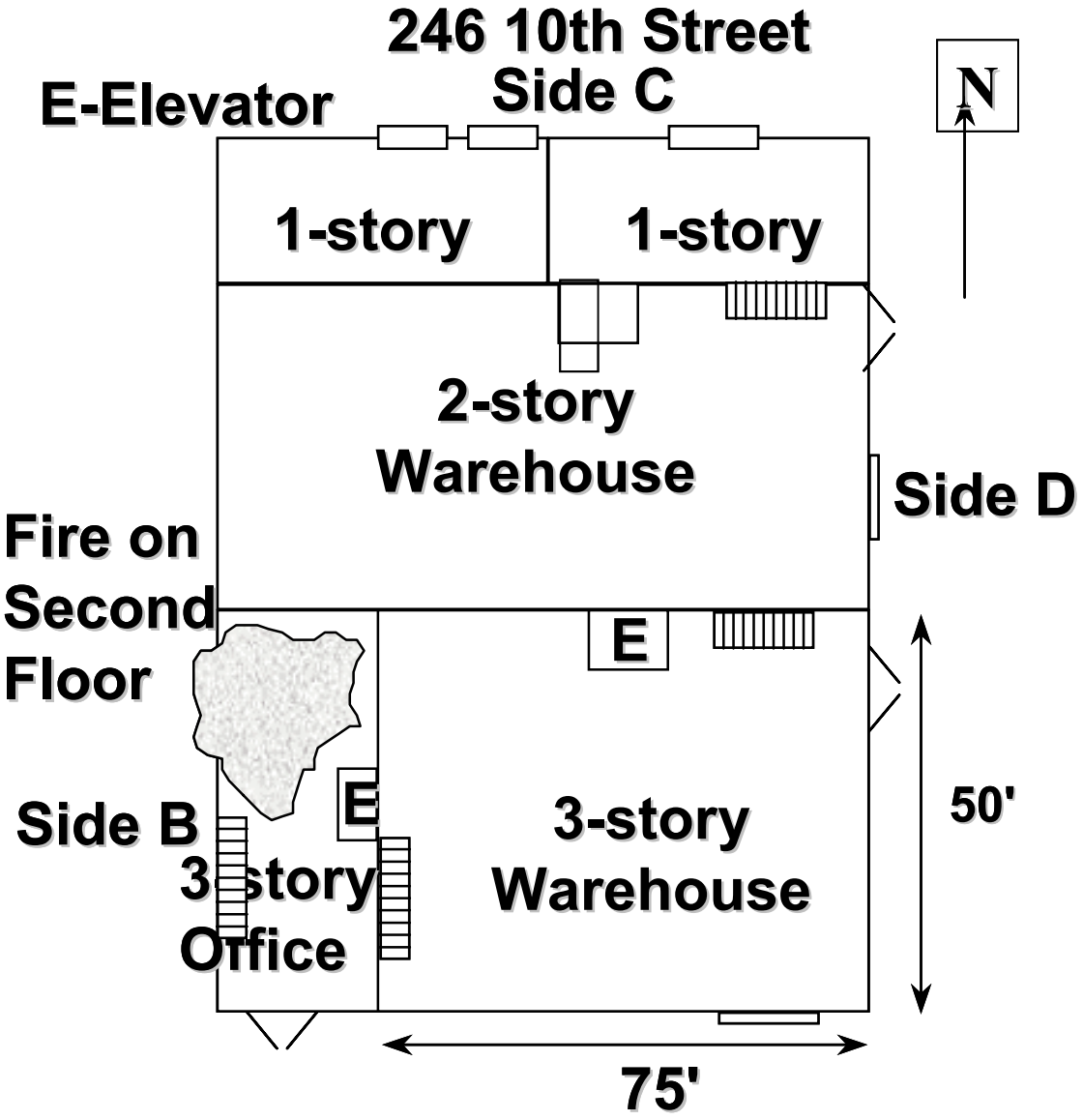
246 10th Street
Side C
E-Elevator
N
1-story
1-story
2-story
Warehouse
Side D
Fire on
Second
Floor
E
E
Side B
3-story
Office
3-story
Warehouse
50'
75'

Column #1 Primary Factor Size-Up Chart

Pertinent Factors (P)	(Check appropriate boxes)	P
Life Hazard	Occupants	
	Firefighters	
Location/Fire	Fire Bldg/ Exposures on Arrival	
	After Arrival – Burn Time	
	Radiation/Conduction/Convection	
Construction	Fire Building	
	Exposures	
Occupancy (Contents)	Fire Building	
	Exposures	
Height	Fire Building (Front/Rear)	
	Exposures (Front/Rear)	
Area	Fire Building/Configuration	
	Proximity of Exposures /Config.	
Structural Collapse	Fire Building	
	Exposures	
	Collapse Zone	
	Apparatus Placement	
Weather	Visibility	
	Temperature/Humidity	
	Wind – Direction/Velocity	
Resource Requirement	Apparatus/Personnel/Equipment - RIC	
	Water Supply/Suppression Agent	
Auxiliary Appliances	Fire Building Supplied	
	Exposures Supplied	
Topography	Street Conditions	
Explosions/ Back Draft	Flash Over Conditions	
Time	Duration of Operations (Rest-Rehab) Time of Day Time of Alarm	

Column #2 Incident Objectives Attainable/ Measurable/ Flexible

Examples of Incident Objectives:

- Safe Removal of All Occupants.
- Contain and Control Fire to Room/Building of Origin.
- Contain, Control and Limit Fire in Exposures.
- Other.

List Incident Objectives:

1. _____
2. _____
3. _____
4. _____
5. _____
6. _____
7. _____
8. _____
9. _____
10. _____

Column #3 Activities (Strategies)

[R] Rescue
- Interior/Exterior/Both

[E] Exposure Protection
- Exposure Examination

[C/E] Confinement/Extinguishment
- Hose Line Replacement

[O] Overhaul
- Expose Hidden Fire

[V] Ventilation
- Removal of Occupants
- Fire Control

[S] Salvage
- Water – Run-Off
- Apply Covers

Forcible Entry
- Location
- Method

Special Equipment
- Imaging Cameras

List Incident Strategies	Assign To:
1.	
2.	
3.	
4.	
5.	
6.	
7.	
8.	
9.	
10.	

Column #4 Evaluate Effect of Activities (Strategies) Every 10 Minutes

Effective	Ineffective

Identify alternative strategies for firefighter safety when occupant safety has been determined not to be a Primary Factor.

- _____
- _____
- _____
- _____
- _____
- _____
- _____

Command Sequence Cycle:

Sizeup:

Objective(s):

Strategy(ies):

Tactics:

Implement:

Evaluate:

Scenario 2

122 M Street

Building Description:

50' x 90', three-story, Type V, wood-frame construction.

Occupancy Type: Garden apartment complex.

One section, four apartments per floor--total 12 apartments.

Fire Location: 122 M St.

Fire is on the third floor rear apartment and attic area. Involvement is approximately 50 percent. Heavy smoke on the third floor and attic.

Report of Occupants:

All occupants have been removed.

Time:

0100 hours

Water Available:

Hydrant area--hydrants at every corner--system flow = 2,500 gpm.

Resources Available:

1st Alarm:
E-1
E-2
E-3
T-1
SQ-1
BC-1

Staffing: four firefighters per apparatus.

Plot Plan

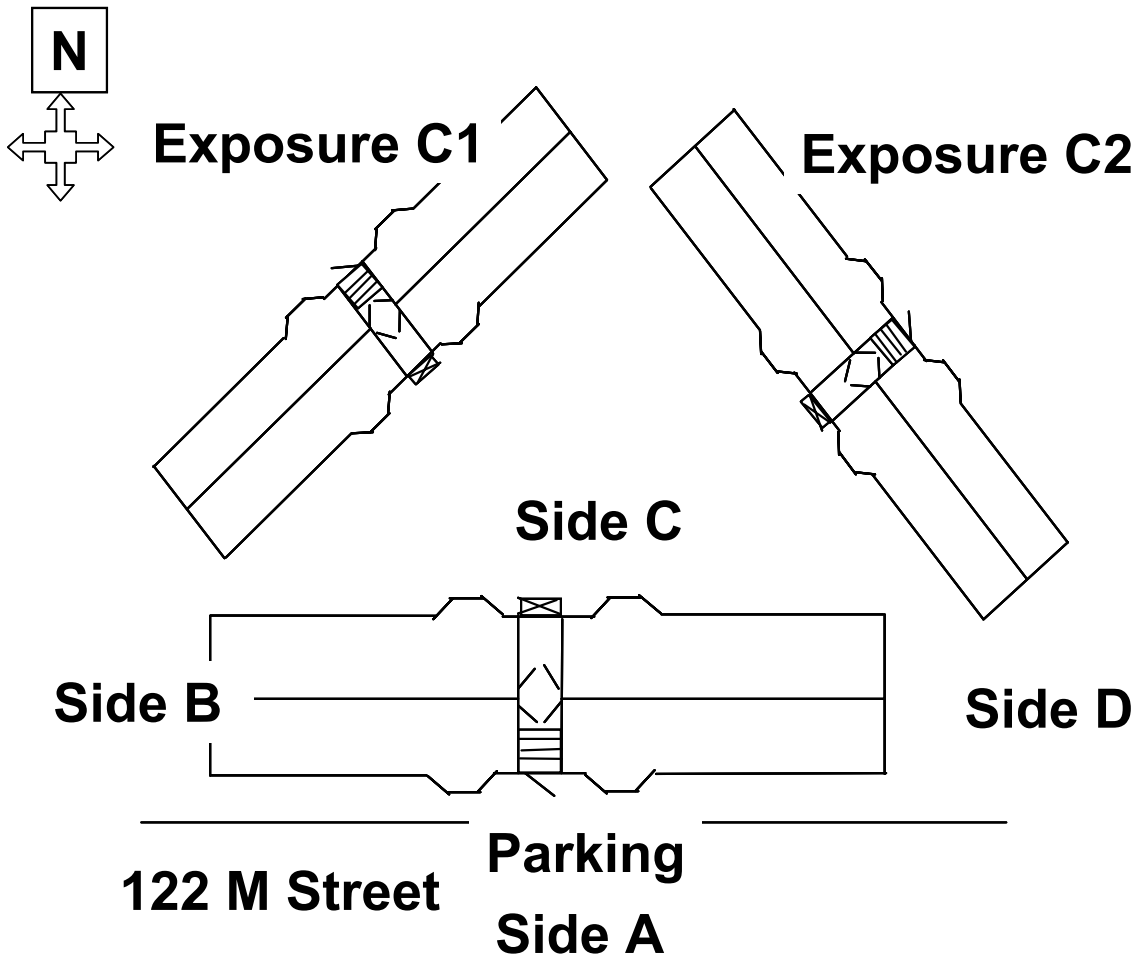
N
Exposure C1
Exposure C2
Side C
Side B
Side D
Parking
122 M Street
Side A

Floor Plan

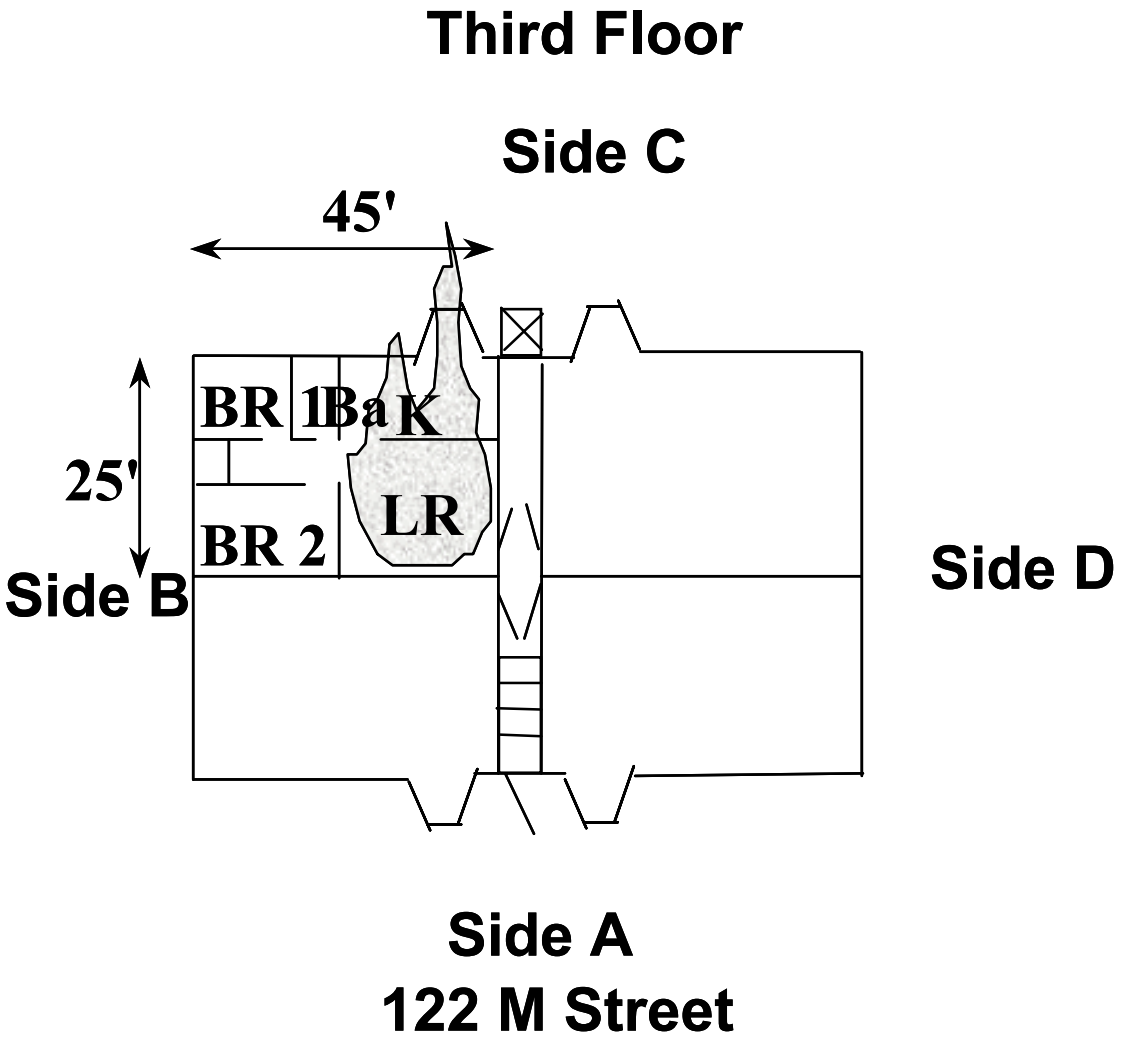
Third Floor
Side C
45'
25'
BR 1
Ba
K
LR
BR 2
Side B
Side D
Side A
122 M Street

Column #1 Primary Factor Size-Up Chart

Pertinent Factors (P)	(Check appropriate boxes)	P
Life Hazard	Occupants	
	Firefighters	
Location/Fire	Fire Bldg/ Exposures on Arrival	
	After Arrival – Burn Time	
	Radiation/Conduction/Convection	
Construction	Fire Building	
	Exposures	
Occupancy (Contents)	Fire Building	
	Exposures	
Height	Fire Building (Front/Rear)	
	Exposures (Front/Rear)	
Area	Fire Building/Configuration	
	Proximity of Exposures /Config.	
Structural Collapse	Fire Building	
	Exposures	
	Collapse Zone	
	Apparatus Placement	
Weather	Visibility	
	Temperature/Humidity	
	Wind – Direction/Velocity	
Resource Requirement	Apparatus/Personnel/Equipment - RIC	
	Water Supply/Suppression Agent	
Auxiliary Appliances	Fire Building Supplied	
	Exposures Supplied	
Topography	Street Conditions	
Explosions/ Back Draft	Flash Over Conditions	
Time	Duration of Operations (Rest-Rehab) Time of Day Time of Alarm	

Column #2 Incident Objectives Attainable/ Measurable/ Flexible

Examples of Incident Objectives:

- Safe Removal of All Occupants.
- Contain and Control Fire to Room/Building of Origin.
- Contain, Control and Limit Fire in Exposures.
- Other.

List Incident Objectives:

1. _____
2. _____
3. _____
4. _____
5. _____
6. _____
7. _____
8. _____
9. _____
10. _____

Column #3 Activities (Strategies)

[R] Rescue
- Interior/Exterior/Both

[E] Exposure Protection
- Exposure Examination

[C/E] Confinement/Extinguishment
- Hose Line Replacement

[O] Overhaul
- Expose Hidden Fire

[V] Ventilation
- Removal of Occupants
- Fire Control

[S] Salvage
- Water – Run-Off
- Apply Covers

Forcible Entry
- Location
- Method

Special Equipment
- Imaging Cameras

List Incident Strategies	Assign To:
1.	
2.	
3.	
4.	
5.	
6.	
7.	
8.	
9.	
10.	

Column #4 Evaluate Effect of Activities (Strategies) Every 10 Minutes

Effective	Ineffective

Identify alternative strategies for firefighter safety when occupant safety has been determined not to be a Primary Factor.

- _____
- _____
- _____
- _____
- _____
- _____
- _____

Command Sequence Cycle:

Sizeup:

Objective(s):

Strategy(ies):

Tactics:

Implement:

Evaluate:

Activity 4.2

Scenario 3

356 E Street

Building Description:

35' x 90', three-story with attic, Type III, ordinary construction.

Two open stair shafts, one at the lobby and one at Side C.

Occupancy Type: Boarding house.

Fire Location: 356 E St.

Fire is on the second floor, Side D. Room involvement is 100 percent. Percentage of floor involved is 10 percent.

Report of Occupants:

All occupants have been removed.

Time:

0300 hours.

Water Available:

Hydrant area, hydrants at every corner, system flow = 1,000 gpm.

Resources Available:

1st Alarm:
E-1
E-2
E-3
T-1
SQ-1
BC-1

Staffing: four firefighters per apparatus.

Floor Plan

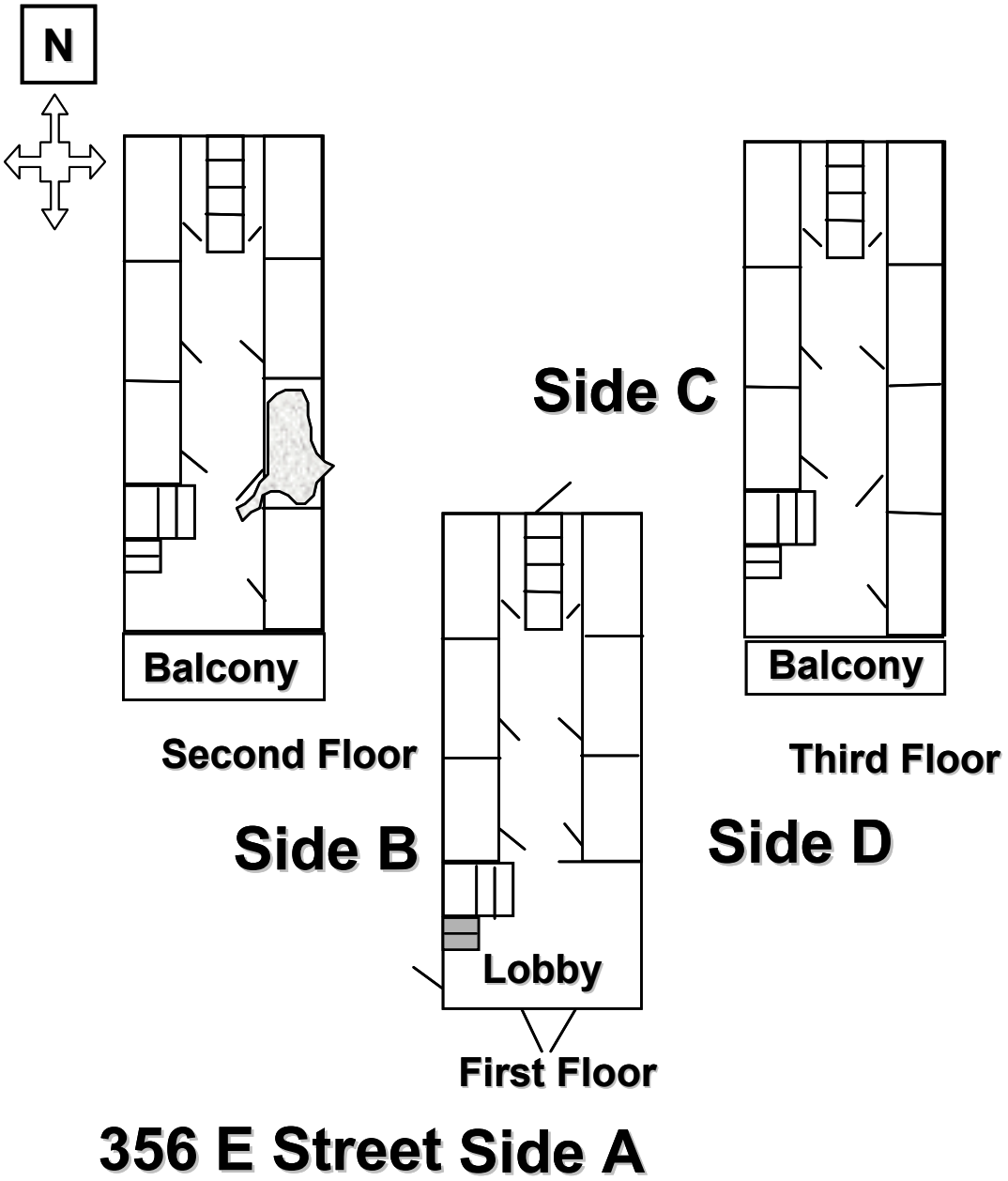
N
Side C
Balcony
Balcony
Second Floor
Third Floor
Side B
Side D
Lobby
First Floor
356 E Street Side A

Column #1 Primary Factor Size-Up Chart

Pertinent Factors (P)	(Check appropriate boxes)	P
Life Hazard	Occupants	
	Firefighters	
Location/Fire	Fire Bldg/ Exposures on Arrival	
	After Arrival – Burn Time	
	Radiation/Conduction/Convection	
Construction	Fire Building	
	Exposures	
Occupancy (Contents)	Fire Building	
	Exposures	
Height	Fire Building (Front/Rear)	
	Exposures (Front/Rear)	
Area	Fire Building/Configuration	
	Proximity of Exposures /Config.	
Structural Collapse	Fire Building	
	Exposures	
	Collapse Zone	
	Apparatus Placement	
Weather	Visibility	
	Temperature/Humidity	
	Wind – Direction/Velocity	
Resource Requirement	Apparatus/Personnel/Equipment - RIC	
	Water Supply/Suppression Agent	
Auxiliary Appliances	Fire Building Supplied	
	Exposures Supplied	
Topography	Street Conditions	
Explosions/ Back Draft	Flash Over Conditions	
Time	Duration of Operations (Rest-Rehab) Time of Day Time of Alarm	

Column #2 Incident Objectives Attainable/ Measurable/ Flexible

Examples of Incident Objectives:

- Safe Removal of All Occupants.
- Contain and Control Fire to Room/Building of Origin.
- Contain, Control and Limit Fire in Exposures.
- Other.

List Incident Objectives:

1. _____
2. _____
3. _____
4. _____
5. _____
6. _____
7. _____
8. _____
9. _____
10. _____

Column #3 Activities (Strategies)

[R] Rescue
- Interior/Exterior/Both

[E] Exposure Protection
- Exposure Examination

[C/E] Confinement/Extinguishment
- Hose Line Replacement

[O] Overhaul
- Expose Hidden Fire

[V] Ventilation
- Removal of Occupants
- Fire Control

[S] Salvage
- Water – Run-Off
- Apply Covers

Forcible Entry
- Location
- Method

Special Equipment
- Imaging Cameras

List Incident Strategies	Assign To:
1.	
2.	
3.	
4.	
5.	
6.	
7.	
8.	
9.	
10.	

Column #4 Evaluate Effect of Activities (Strategies) Every 10 Minutes

Effective	Ineffective

Identify alternative strategies for firefighter safety when occupant safety has been determined not to be a Primary Factor.

- _____
- _____
- _____
- _____
- _____
- _____
- _____

Command Sequence Cycle:

Sizeup:

Objective(s):

Strategy(ies):

Tactics:

Implement:

Evaluate:

Activity 4.3
Large Exercise 2

Three-Story Library Building
780 8th Street

Purpose

To apply the Command Sequence to a fire confinement, exposure protection, support/overhaul, rescue, and ventilation, support, and overhaul simulated exercise.

Directions

1. You will be assigned to teams of three. Refer to the Command Sequence Tactical Chart (CSTC), and Primary Factor Chart (PFC).

2. Two students will assume jointly the role of the first due engine CO.

3. One student will be the team recorder. Team recorder position will rotate among team members during the large simulations.

4. Team recorder will record all tactical actions taken by the first-due CO onto the CSTC and PFC.

5. The instructor will review the CSTC and PFC preparation process with the class.

6. Refer to your SM for Plot Plan and Building Information.

7. The first chief officer will not arrive on scene for 30 minutes, and the first-due CO will manage the incident until the arrival of the chief.

8. Primary sizeup factors and visible cues are on **Slide Sequence 1.**

9. Upon completion of the primary sizeup process, the first-due CO will enter onto the Primary Factor Chart the following information based on the sizeup/cues:

    a. Primary sizeup cues/factors.

    b. Initial objectives.

    c. Initial strategy.

Plot Plan

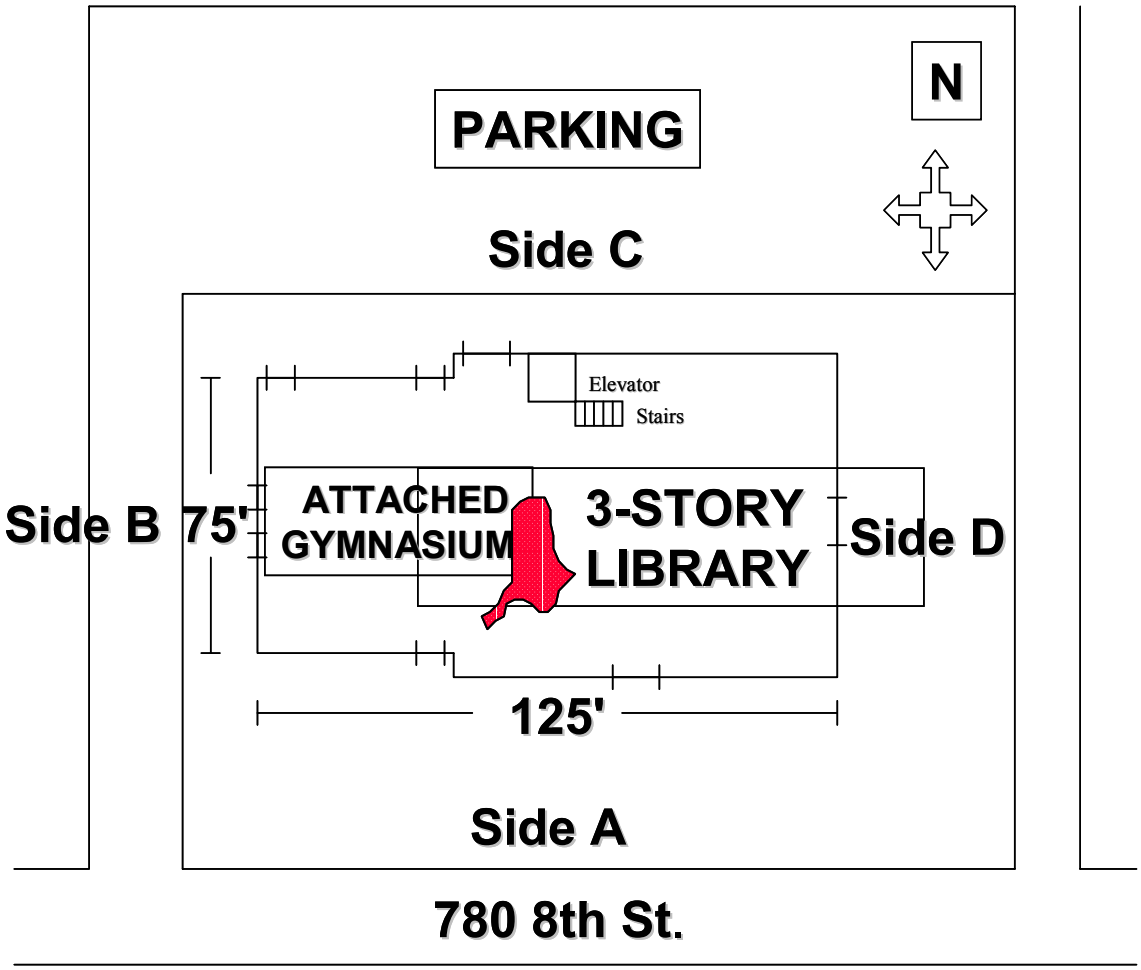
N
PARKING
Side C
Elevator
Stairs
Side B
75'
ATTACHED
GYMNASIUM
3-STORY
LIBRARY
Side D
125'
Side A
780 8th St.

COMMAND SEQUENCE TACTICAL CHART

To be completed during simulation:

Tactical Assignment:	Assigned to:	Progress Report:

TRANSFER OF COMMAND CHART

To be completed upon transferring command:

Location and Extent of Fire:	
Control Efforts:	
Deployment of Resources:	
Need for Additional Resources	

Column #1 Primary Factor Size-Up Chart		
Pertinent Factors (P)	(Check appropriate boxes)	P
Life Hazard	Occupants	
	Firefighters	
Location/Fire	Fire Bldg/ Exposures on Arrival	
	After Arrival – Burn Time	
	Radiation/Conduction/Convection	
Construction	Fire Building	
	Exposures	
Occupancy (Contents)	Fire Building	
	Exposures	
Height	Fire Building (Front/Rear)	
	Exposures (Front/Rear)	
Area	Fire Building/Configuration	
	Proximity of Exposures /Config.	
Structural Collapse	Fire Building	
	Exposures	
	Collapse Zone	
	Apparatus Placement	
Weather	Visibility	
	Temperature/Humidity	
	Wind – Direction/Velocity	
Resource Requirement	Apparatus/Personnel/Equipment - RIC	
	Water Supply/Suppression Agent	
Auxiliary Appliances	Fire Building Supplied	
	Exposures Supplied	
Topography	Street Conditions	
Explosions/ Back Draft	Flash Over Conditions	
Time	Duration of Operations (Rest-Rehab) Time of Day Time of Alarm	

Column #2 Incident Objectives Attainable/ Measurable/ Flexible

Examples of Incident Objectives:

- Safe Removal of All Occupants.
- Contain and Control Fire to Room/Building of Origin.
- Contain, Control and Limit Fire in Exposures.
- Other.

List Incident Objectives:

1. _____
2. _____
3. _____
4. _____
5. _____
6. _____
7. _____
8. _____
9. _____
10. _____

Column #3 Activities (Strategies)

[R] Rescue
- Interior/Exterior/Both

[E] Exposure Protection
- Exposure Examination

[C/E] Confinement/Extinguishment
- Hose Line Replacement

[O] Overhaul
- Expose Hidden Fire

[V] Ventilation
- Removal of Occupants
- Fire Control

[S] Salvage
- Water – Run-Off
- Apply Covers

Forcible Entry
- Location
- Method

Special Equipment
- Imaging Cameras

List Incident Strategies	Assign To:
1.	
2.	
3.	
4.	
5.	
6.	
7.	
8.	
9.	
10.	

Column #4 Evaluate Effect of Activities (Strategies) Every 10 Minutes

Effective	Ineffective

Identify alternative strategies for firefighter safety when occupant safety has been determined not to be a Primary Factor.

- _____
- _____
- _____
- _____
- _____
- _____
- _____

UNIT 5: WATER SUPPLY, FIXED FIRE PROTECTION SYSTEMS, AND SALVAGE

OBJECTIVES

The students will:

1. *Identify the principles of water supply and tactics for establishing water supplies using municipal sources, static sources, and portable sources.*

2. *Identify the principles and tactics to achieve salvage.*

3. *Explain the correct procedures and select the appropriate size hoselines for attaching to a fire department connection.*

4. *Describe the procedures for deployment of a hoseline from a standpipe system.*

5. *Using the command sequence cycle, develop a water supply action plan based on the incident presented.*

6. *Using the command sequence cycle, develop a salvage action plan based on the incident presented.*

WATER SUPPLY

One of the most essential tactics initiated on the fireground is that of providing sufficient water to meet needed fire flows. Without adequate water, no other tactics can be completed safely. For this reason the Company Officer (CO) assigned to water supply must be knowledgeable as well as skillful in initiating and implementing water supply tactics. The basic principle of water supply is to develop a supply adequate to support all fireground operations.

Establishing Water Supply Using Municipal Systems

When working with a municipal system the CO must have a clear understanding of the **source and supply** of water. Municipal systems have a history of being very dependable and they are the most common water source used in urban settings. However, major fire operations will put large demands on the system, creating critical limitations.

Water in municipal systems is provided in one of three ways. In **gravity systems** the water is stored in large tanks on top of hills, or stored in reservoirs elevated on top of towers. Water is delivered by gravity. The amount of pressure and water available at a hydrant will depend on several factors, such as the height of the water tower or tank, the size of the tank, and the condition of the delivery system. Generally, the higher the tank, the higher the pressure available. When using gravity systems, the CO must remember that the tank can run out of water, and it takes time to fill the tank.

The second type of municipal system is a **pump system**. In this system static water is stored in lakes, dams, or water tanks and is distributed by pumping. In pump systems the amount of water available depends on the size of the pump and the condition of the delivery system. In some systems, booster pumps, which increase pressure, must be turned on manually to meet fire flow needs.

The third type of municipal system uses a **combination** of gravity and pumps to move water. When using any type of municipal system, backup sources should be identified in the event the primary source fails or is inadequate.

The **quantity of water** available in a given water system is based on the amount of water stored, the size and condition of mains, and the type of hydrants. The CO must know the limitations on the amount of water available. Water tanks can be emptied, and the amount of water stored may not be the same as the size of the tank. The **amount of water stored**

may depend on time of day and needs anticipated by the water department. The **size and condition of mains** play an important role in the amount of water that is delivered in a system. A minimum of 6-inch lines should be used in residential areas, and 8 inches or greater in commercial. The CO must locate and identify the size of mains in each district or jurisdiction in order to make sound decisions for developing water supply at fires. In regard to fire hydrants, the size of the barrel and the number and size of discharges affect the amount of water that can be discharged. The annual or semiannual flow testing of hydrants will give the CO necessary information on the amount of water available. Hydrant flow rates vary and are dependent on time of day. Flow is often determined at "low-demand" times.

Water is distributed throughout the system by mains. Properly engineered systems are designed as **grid or loop systems**. This type of system connects all the mains together and allows water to flow in several directions. Mains not connected in a loop system are called **dead-end mains**. These mains generally have limited flow during high demand times such as a fire, and should be avoided when possible. A department must review the water distribution maps from the utility department. This is the only effective way of knowing which mains are "dead-ends." As mentioned, dead-end mains typically have very low fire flows compared to looped mains; however, this is not always true. Without maps, the fire officer cannot tell which systems are dead-ends and which looped mains are just poor water suppliers. In addition, there may be valves that normally are closed in a looped system that could be opened during a fire situation. It may be necessary to lay supply lines from a better system to the incident scene or to connect a poor system to a better system by laying lines between two convenient hydrants and placing a pumper in that system to increase flow and pressure--be careful not to overpressurize a poor, older system's mains. Some main systems are **high pressure** and some systems are **low pressure**.

A **good working relationship with the water department** is essential for a continuous, reliable water system. The CO must be aware of any water system deficiencies. Poor condition of mains, inoperable pumps, closed valves, and poorly engineered systems often lead to system failure. The CO must be prepared and have a backup plan should a system fail.

In establishing **water supply tactics**, it also is the responsibility of the CO to determine how the water will be delivered from the hydrant to the fire. Proper selection of **size and number of supply lines** is essential. The amount of water supplied depends on the pressure and volume available from the hydrant or supply pumper, the size of hose laid, and the number of lines laid. Fire departments must take a proactive look at large diameter hose.

An example of the value of increasing hose diameter is shown in the following table. For a straight lay with 65 psi at the hydrant, when flowing water and with the pumper 600 feet from the hydrant with 10 psi residual:

Hose size	gpm at 600 feet
2-1/2"	210 gpm
3"	330 gpm
3-1/2"	520 gpm
4"	670 gpm
5"	1,250 gpm

Establishing Water Supply Using Static Systems

In areas not covered by municipal systems, alternate sources must be used. Rural fire operations often are dependent on static sources. CO's must locate and identify all usable static sources. Lakes, ponds, rivers, pools, and other bodies of water all provide good sources of water for firefighting operations.

When **preplanning static sources** the CO must determine whether the source is accessible and the condition of the water. Is water available year round or only in the summer or winter? Is the apparatus being used designed for static operations? How much total water is available? The answers to these questions, along with a good training program, will lead to good static operations.

In many areas, departments are identifying static sources and installing **dry hydrants**. Dry hydrants generally allow for year-round operations and greatly improve the efficiency of rural water supply tactics.

Often the delivery method used to move water from static sources to the fire includes **relay pumping**. If relay pumping is used, the CO must have a good understanding of hydraulics and plan carefully. Certain rules of relay pumping must be followed for effective operations. The largest pump should be placed at the static source and the smallest pump at the fire. If using 2-1/2-inch hose, the recommended distance between pumps is approximately 700 feet. When using large diameter hose, the distance between pumps and the volume flowing can be increased. For 5-inch hose the recommended distance between pumps is 1,200 feet. Preplanning and training can assure effective water supply efforts when relay pumping.

Establishing Water Supply Using Portable Systems

Rural firefighting operations have been enhanced by the use of water **tankers/tenders**. Such apparatus can supply large amounts of water to the fire, using either a nursing operation or a shuttle operation. In a nursing operation, the tanker goes directly to the fire and supports the engines on scene. In a shuttle operation, tanker/tenders are used to move water from a municipal or static source to the fire. The concept is to drop the water at the fire, refill at the source, and return to dump again. When dumping water at the fire, the onscene apparatus drafts from portable tanks.

Successful operations depend greatly on **tanker/tender shuttle effectiveness**. Apparatus should be designed to handle the weight of the water, be easily maneuverable, quick filling, and quick dumping. The concept is to dump as fast as possible, travel to the water source, fill as fast as possible, and return to the fire while, at all times, operating safely.

Effectiveness is measured in **tanker delivery rate** (TDR). This is also a tool used to determine the number of tanker/tenders needed to support an operation. TDR is determined by dividing the capacity of the tanker/tender by the time it takes to make one cycle. Example: if it takes a 2,500-gallon tanker/tender 20 minutes to dump, travel to the water source, and return, the TDR for that tanker/tender is 125 gallons per minute. If the needed fire flow is 750 gallons per minute for the fire, six tankers (of the same size and type) should be sufficient to meet the needed fire flow.

Additional support for effective water shuttle operations includes the setup of **fill and dump sites**. These sites should be located to allow easy access for tanker/tenders to get in and out safely. CO's may function as shuttle water officers or as fill site or dump site officers.

Coordination

The water supply requirements must be coordinated with the Incident Commander (IC) and with each end user to assure adequate water supply for all tactical operations.

Hose Friction Loss (PSI per 100 Feet)						
GPM	**3"**	**3 ½"**	**4"**	**4 ½"**	**5"**	**6"**
500	20	9.5	5	3		
750	45	20	11	6	5	
1000	80	34	20	10	8	3
1250		53	31	16	13	4
1500		74	45	23	18	6
1750			61	31	25	8
2000					32	10.5
2500						16.5

Twenty psi needs to be added to the friction loss for the residual on the receiving pump.

SUPPORTING AND USING FIXED FIRE PROTECTION EQUIPMENT

Many buildings today will be equipped with built-in fire protection devices. These systems often are used to detect a fire, alert the occupants to an emergency, initiate a response from the fire department, control or extinguish the fire, or provide a reliable water supply on each floor of a building.

Automatic Sprinkler System

The automatic sprinkler system is an arrangement of piping, valves, and water discharge heads designed to detect a fire (usually through a rapid rise in heat) and to operate to confine and/or control the fire. Properly installed and maintained sprinkler systems enjoy a very successful rate of confining or extinguishing the fire before the fire department arrives on the scene.

Standpipe System

A standpipe system is an arrangement of piping, valves, and discharge hose connections strategically placed in a structure to provide an effective and reliable water supply for fire suppression teams. These systems generally are provided where the advancement of water supply lines are difficult due to the size or height of the structure. Systems that are engineered and installed for fire department use will have a 2-1/2-inch hose connection that will supply 500 gallons per minute (gpm) at a minimum of 100 pounds of pressure.

The National Fire Protection Association (NFPA) Standard 14, *Standard for the Installation of Standpipe and Hose Systems*, identifies three classifications of standpipe systems. A Class I system is intended solely for fire department use and consists of one 2-1/2-inch male hose connection controlled by a valve at the connection. A Class II system is intended for the occupants of the structure or for fire brigade use and consists of one 1-1/2-inch male hose connection and generally 100 feet of hose with a nozzle attached. A Class III system is a combination of a Class I and Class II, consisting of one 2-1/2-inch male hose connection that is reduced to one 1-1/2-inch male connection and generally has 100 feet of hose with a nozzle attached. The Class I and III systems are designed to provide 500 gallons per minute at a minimum of 100 pounds pressure. A Class II system is designed to provide 100 gallons per minute at a minimum of 65 pounds pressure.

Preincident Planning

Preincident planning must include a review of the sprinkler or standpipe system, and critical data should be recorded on the completed **preplan forms**. The water supply source should be evaluated for reliability, and valves should be checked to ensure that the system is supplied adequately.

While the most common **water source** is from a municipal water supply, occasionally systems also will be supplied from onsite storage tanks or from fire ponds with fire pumps. It is important to evaluate the pump to determine the power source for the pump and whether it is started automatically. Pumps may be powered electrically and, when such pumps are identified, the auxiliary electrical backup power also should be evaluated. Pumps may be powered from gasoline, diesel fuel, natural gas, or liquefied petroleum gas (LPG) engines. If the pumps are not started automatically, the method of starting them must be noted on the preplan form and posted at the pump control room. If the pumps are started automatically it should be noted on the preplan form, so that the fire attack crews can be prepared for a pressure surge when the pump is activated.

Generally the water supply to the systems is controlled by one of three different types of **valves**. The most common valve is called the **outside stem and yoke (OS&Y)**; it should be remembered that when the stem (threaded shaft) is out the valve is open. As a rule of thumb, if the unit is an 8-inch valve you will find 8 inches of stem exposed when the valve is fully open. A 6-inch valve would show 6 inches of exposed thread, and other size valves would follow the same pattern. A second control valve is called the **wall valve (WV)** and generally is installed on an outside wall of a building. This allows the valve to be inside the structure while the control of the valve is outside the structure. A third type of control valve

is called a **post indicator valve (PIV)** and will rise out of the ground approximately 40 inches. This valve controls the water in the supply pipe and may be remote from the actual system. It is equipped with an observation window to indicate whether the valve is in the open or closed position.

The **fire department connection** should be evaluated to see if the connection might supply more than one system, such as both a sprinkler and standpipe system. In large buildings there may be more than one system that could be supplied by more than one connection, or some systems may be interconnected and can be supplied from one of several fire department connections at the structure. The connection should be checked to ensure that the check valves are free of debris and in working order. A system which does not have clapper (check) valves in the fire department connection should be noted on the preplan, so that special precautions can be taken during the supply operations. Finally, all hose connections should be checked during the preincident evaluation to ensure that the hose threads are compatible and all components such as the valve control handles are in place and operational.

Connecting to a Fire Department Connection

Connecting supply lines to a fire department connection should be completed as soon as possible at a fire. If the connection has protective covers, they should be removed and the connection checked for debris. Remove any debris found quickly, and begin the connection process. If the water supply has only one hose connection, connect the water supply line and commence pumping. If the connection has two water supply hose connections and operable clapper valves, one line should be connected and pumping commenced before the second line is connected. Should the clapper valves be inoperable or not exist, it is important to connect both water supply lines before commencing water supply pumping. It generally is recommended to restrict the pressure at the supply connection to 150 pounds unless the system is designed specifically for additional pressure.

Pumping into an Automatic Sprinkler or Standpipe System

When pumping into an automatic sprinkler or standpipe system, be aware that when the pressure from the fire department pumper exceeds the pressure from the normal water supply, the fire department pumper will become the total water supply for the system.

The pumper operator can be a valuable resource to the CO and the IC in determining how many gallons of water are flowing into the sprinkler system. If the fire apparatus is equipped with flow meters on the discharge side of the pump, this is easily determined by reading the flow rate. If the apparatus is equipped with pressure gauges, the pump operator must make a determination based upon the difficulty the pump is having in maintaining the desired pressure. A pump working at an idle is probably not flowing much water, while a pump working at full throttle to maintain pressure is probably moving a great deal of water. This is valuable information in determining the size of the fire area, how many sprinkler heads have opened, or if there has been system failure.

Connecting Attack Line to Standpipe Connection

If a fire department has structures with standpipe systems, or if it might respond under mutual aid to a structure so equipped, it should prepare prior to the response by assembling a **standpipe kit** for the incident. The kit should include items that may be needed on an upper floor in order to initiate an initial fire attack. Items for consideration include a minimum of 100 feet of attack hose and a nozzle appropriate for the occupancy, spanner wrench, spare control valve handle, a pair of locking pliers or small pipe wrench to open stuck valves, and a 2-1/2 by 1-1/2-inch Wye to connect two lines to the 2-1/2-inch hose connection. If the structure has recessed wall hose cabinets it may be advisable to carry a short length of 2-1/2-inch hose to connect to the supply connection in the cabinet and then connect the Wye adapter onto the short length of hose. Normally it is not possible to connect the Wye directly onto the supply connection inside the hose cabinet without first using the short length of supply hose. When working from a standpipe system with a fire pump that is activated when the water pressure of the system is reduced to a hoseline being opened, prepare for a sudden increase in pressure when the pump is activated. When the fire department apparatus becomes the sole supply of water it may be necessary to coordinate pump pressure information with the pump operator to obtain the desired operating pressure at the standpipe discharge connection.

Coordination

Officers given the tactical assignment of fire confinement or extinguishment must coordinate their efforts carefully with other tactical assignments. For example, it is imperative that fire confinement assigned to support a search effort be closely coordinated with the search team activity. This may include the determination of the area to be searched, how long the search effort will take, how many searchers will be involved,

and where the fire is located in relation to the area to be searched. Coordination with other hoselines also is critical, since all hoselines dedicated to a specific tactical assignment must work together in order to accomplish the assignment successfully and safely. Hoselines should be coordinated closely so as not to oppose each other, and should be placed so that a safe exit may be made if necessary.

Coordination between fire confinement/extinguishment and water supply also is important if water supply is carried out by someone other than the personnel assigned to fire confinement or extinguishment. A water supply that is not consistent with the application rate will spell danger for the confinement or extinguishment team and hamper the success of the assignment. Effectively supplying water to an incident scene means that water equal to the needed gpm or greater is available for use in fire attack hoselines. When insufficient water is being supplied to the fire scene, all personnel dependent on the fire attack team extinguishing the fire can be jeopardized (this also can occur if adequate backup lines are not in place). If possible, backup lines should come from a separate water source so that, in the event of a loss of water or equipment failure, the backup line still is operational and can be used to assist the fire confinement or extinguishment team to safety. Coordination with ventilation also is vital to the success of fire confinement and extinguishment. A fire attack without ventilation support is extremely dangerous and difficult. A ventilation effort before hoselines are ready and in position also can be dangerous as a result of the fire that will occur.

Laddering, forcible entry, auxiliary lighting, and items such as contamination from asbestos fibers also are vital coordination factors that the officer in charge of fire confinement and extinguishment must consider. Soon after the fire attack is started, a new supply of air is a critical coordination factor that must be planned for. During overhaul and salvage, hoselines may be needed to extinguish hidden fires in voids, furniture, or other areas. The need for a protective or extinguishment hoseline should be coordinated with the officers responsible for the overhaul and salvage assignments.

Safety Considerations

As CO, the safety of your firefighters is your first and foremost priority. As the risk involved with the incident increases, management of safety considerations also must increase. For each tactical assignment the CO must evaluate the potential risk to personnel compared to the benefits to be gained. The CO may find that the risk is too great, and the IC should be made aware of that concern.

It is important to remain aware of time and to recognize that, as the fire continues to burn, the structural elements probably are being weakened. As structural elements weaken, gravity eventually will take over and pull the structure down. The CO is the Safety Officer for the personnel assigned to his/her tactical operation. The safety of all personnel must be planned for and supported throughout the entire incident. Safety always must be the first consideration.

SALVAGE OPERATIONS

Salvage is a tactical operation that creates a very positive image with the public. Fire departments providing good salvage operations are well respected and provide a service not soon forgotten by citizens. Such tactics also are a major part of a fire department's mission to reduce property damage/loss.

Salvage is the tactical operation of protecting property from damage.

Basic salvage principles include minimizing damage to building and contents caused by fire, smoke, and water and protecting building from structural damage due to the weight of water.

Select Appropriate Salvage Tactics

One of the main salvage tactics is **protecting in-place** by covering or moving items. Generally this can be completed with minimal crews. In most cases property is placed in the center of a room and then covered with salvage covers; not all items need to be moved, but grouping property together allows crews to protect more property with fewer salvage covers.

Another salvage tactic is **removing** items from the fire area. This is a fairly simple tactic for small items but removal of many and/or large items takes significant resources and time. Whenever a CO makes a decision to remove property, he/she also must assume responsibility for protecting the removed property.

Since firefighting uses large amounts of water, CO's assigned to salvage tactics have the responsibility to manage **water flow within the building and water removal from the building**. Water is a major cause of damage and contributes to collapse. Removing water from a building has a positive effect on public relations, as well as reducing property damage. Water can be removed from structures using water chutes, catchalls, water-vacs, and tools such as scuppers, mops, buckets, and squeegees. CO's must locate drains or scuppers to facilitate removal of water.

Other salvage tactics include **ventilating** to remove smoke and heat, and **removal of debris** from the building.

The last effort of salvage operations provided by proactive departments is protecting the property as much as possible from the elements. It is a good practice **to cover any openings** such as ventilation holes, and broken or missing windows and doors.

Coordination and Planning

Salvage operations must be coordinated with all other tactics. Fire control efforts, such as rapid extinguishment and early ventilation, reduce fire loss. Conservation of water from hoselines also contributes to salvage efforts.

ACTIVITIES

Activity 5.1

Water Supply Operations

Purpose

To learn where to use the command sequence cycle to develop an action plan for water supply operations.

Directions

1. The class will be divided into table groups.

2. There are three scenarios for water supply operations.

3. A floor/plot plan is in the Student Manual (SM) for each occupancy. The floor/plot plans show the amount of involvement in the building.

4. You will be shown several slides of the building's various sides and one slide showing smoke and/or fire.

5. The instructor will assign one scenario to each group. Look at your floor/plot plans for the scenario.

6. Each group will develop a water supply action plan using the command sequence cycle for its assigned scenario. Use the Primary Factors Chart and complete the Student Activity Worksheet.

7. Groups will be required to report back to the class their action plans using the command sequence cycle.

8. Each group has 10 minutes to complete its assignment.

Activity 5.1 (cont'd)

Scenario 1

122 M Street

Building Description:

50' x 90', three-story, Type V, wood-frame construction.

Occupancy: Garden apartment complex.

One section, four apartments per floor--total 12 apartments.

Fire Location: 122 M St.

Fire is in the third floor rear apartment, and the attic area is well involved.

Time:

1200 hours.

Water Available:

Nonhydrant area. There is a pond 3,000 feet to the east.

Resources Available:

1st Alarm:
E-1
E-2
E-3
T-1
T/T 1--2,000 gallons
T/T 2--2,000 gallons
BC-1

Staffing: four firefighters per apparatus.

Plot Plan

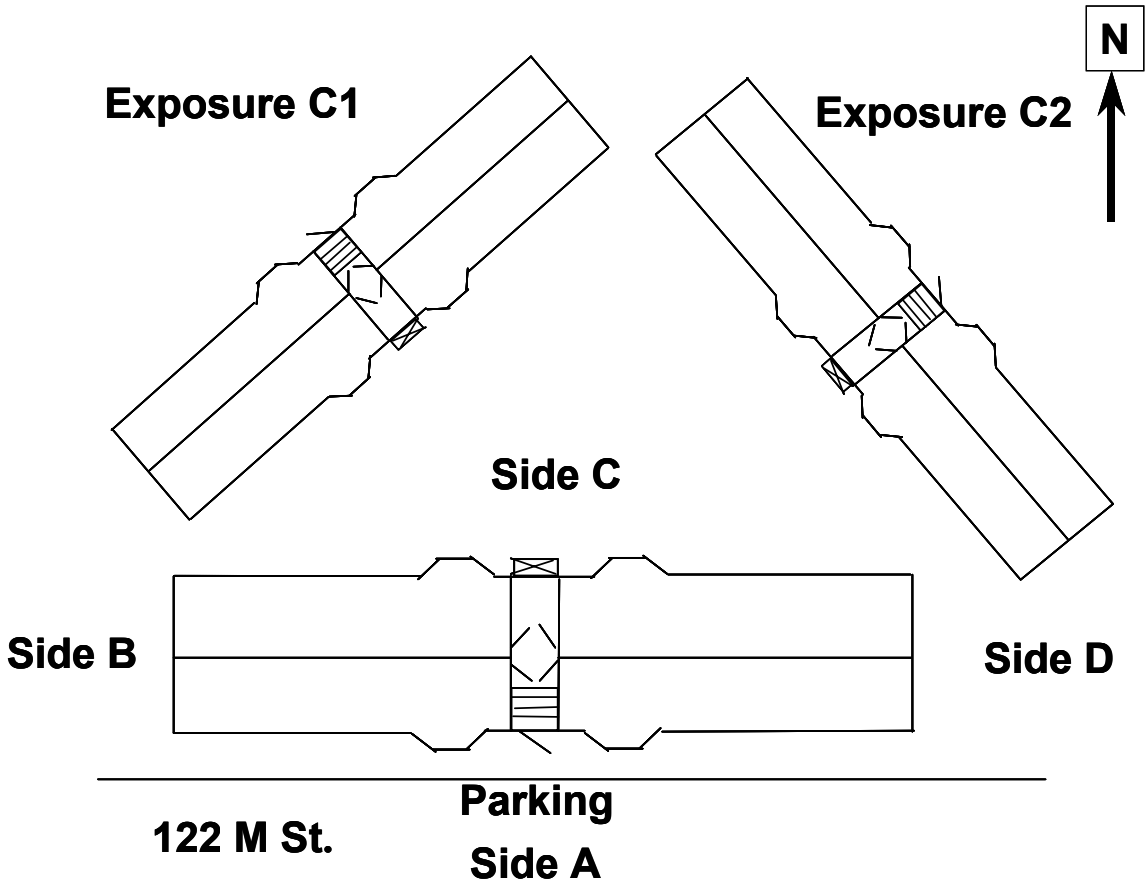
N
Exposure C1
Exposure C2
Side C
Side B
Side D
Parking
122 M St.
Side A

Floor Plan

Third Floor

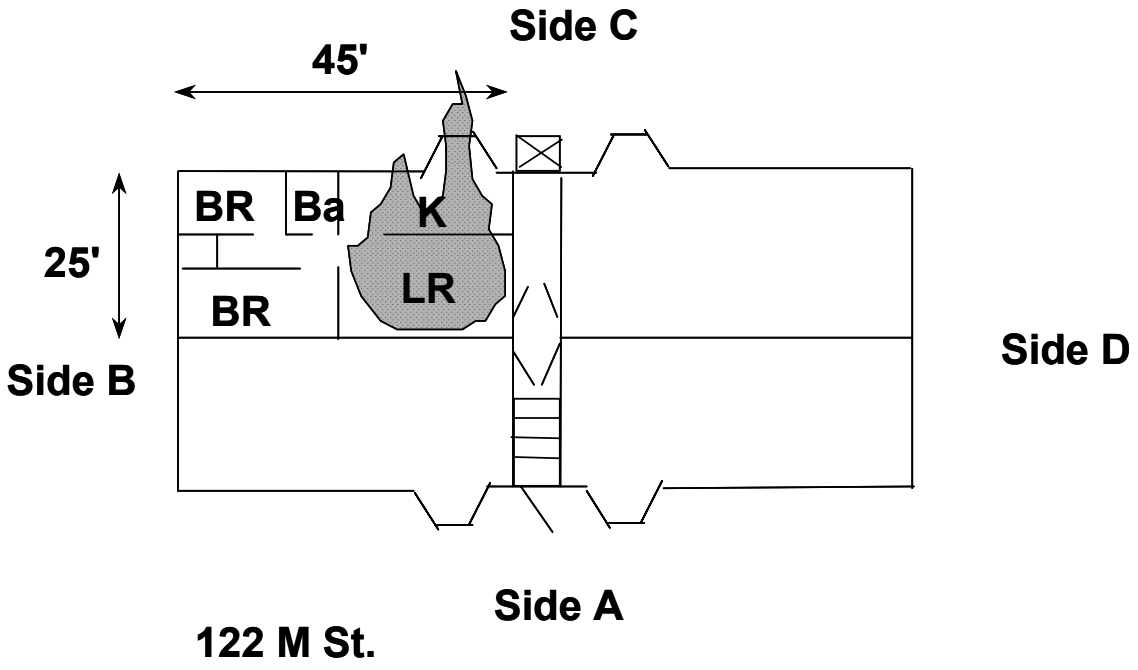

Column #1 Primary Factor Size-Up Chart		
Pertinent Factors (P)	(Check appropriate boxes)	P
Life Hazard	Occupants	
	Firefighters	
Location/Fire	Fire Bldg/ Exposures on Arrival	
	After Arrival – Burn Time	
	Radiation/Conduction/Convection	
Construction	Fire Building	
	Exposures	
Occupancy (Contents)	Fire Building	
	Exposures	
Height	Fire Building (Front/Rear)	
	Exposures (Front/Rear)	
Area	Fire Building/Configuration	
	Proximity of Exposures /Config.	
Structural Collapse	Fire Building	
	Exposures	
	Collapse Zone	
	Apparatus Placement	
Weather	Visibility	
	Temperature/Humidity	
	Wind – Direction/Velocity	
Resource Requirement	Apparatus/Personnel/Equipment - RIC	
	Water Supply/Suppression Agent	
Auxiliary Appliances	Fire Building Supplied	
	Exposures Supplied	
Topography	Street Conditions	
Explosions/ Back Draft	Flash Over Conditions	
Time	Duration of Operations (Rest-Rehab) Time of Day Time of Alarm	

Column #2 Incident Objectives Attainable/ Measurable/ Flexible

Examples of Incident Objectives:

- Safe Removal of All Occupants.
- Contain and Control Fire to Room/Building of Origin.
- Contain, Control and Limit Fire in Exposures.
- Other.

List Incident Objectives:

1. _____
2. _____
3. _____
4. _____
5. _____
6. _____
7. _____
8. _____
9. _____
10. _____

Column #3 Activities (Strategies)

[R] Rescue
- Interior/Exterior/Both

[E] Exposure Protection
- Exposure Examination

[C/E] Confinement/Extinguishment
- Hose Line Replacement

[O] Overhaul
- Expose Hidden Fire

[V] Ventilation
- Removal of Occupants
- Fire Control

[S] Salvage
- Water – Run-Off
- Apply Covers

Forcible Entry
- Location
- Method

Special Equipment
- Imaging Cameras

List Incident Strategies	Assign To:
1.	
2.	
3.	
4.	
5.	
6.	
7.	
8.	
9.	
10.	

Column #4 Evaluate Effect of Activities (Strategies) Every 10 Minutes

Effective	Ineffective

Identify alternative strategies for firefighter safety when occupant safety has been determined not to be a Primary Factor.

- _____
- _____
- _____
- _____
- _____
- _____
- _____

Command Sequence Cycle:

Sizeup:

Objectives:

Strategy(ies):

Tactics:

Implement:

Evaluate:

Activity 5.1 (cont'd)

Scenario 2

246 10th Street

Building Description:

21' x 50', three-story, Type III, ordinary construction.

Occupancy: Office building.

Connected to a three-story warehouse and two-story warehouse, both of ordinary construction.

Fire Location: 246 10th St.

Fire is on the second floor at the rear of the office building. Involvement is approximately 35 percent.

Time:

1000 hours.

Water Available:

A river is 2,000 feet to the north. Closest hydrant is 4,000 feet to the west.

Resources Available:

1st Alarm:
E-1
E-2
E-3
T-1
T/T 1--2,000 gallons
T/T 2--2,000 gallons
BC-1

Staffing: four firefighters per apparatus.

Floor Plan
Fire On Second Floor--3-Story Connected Building

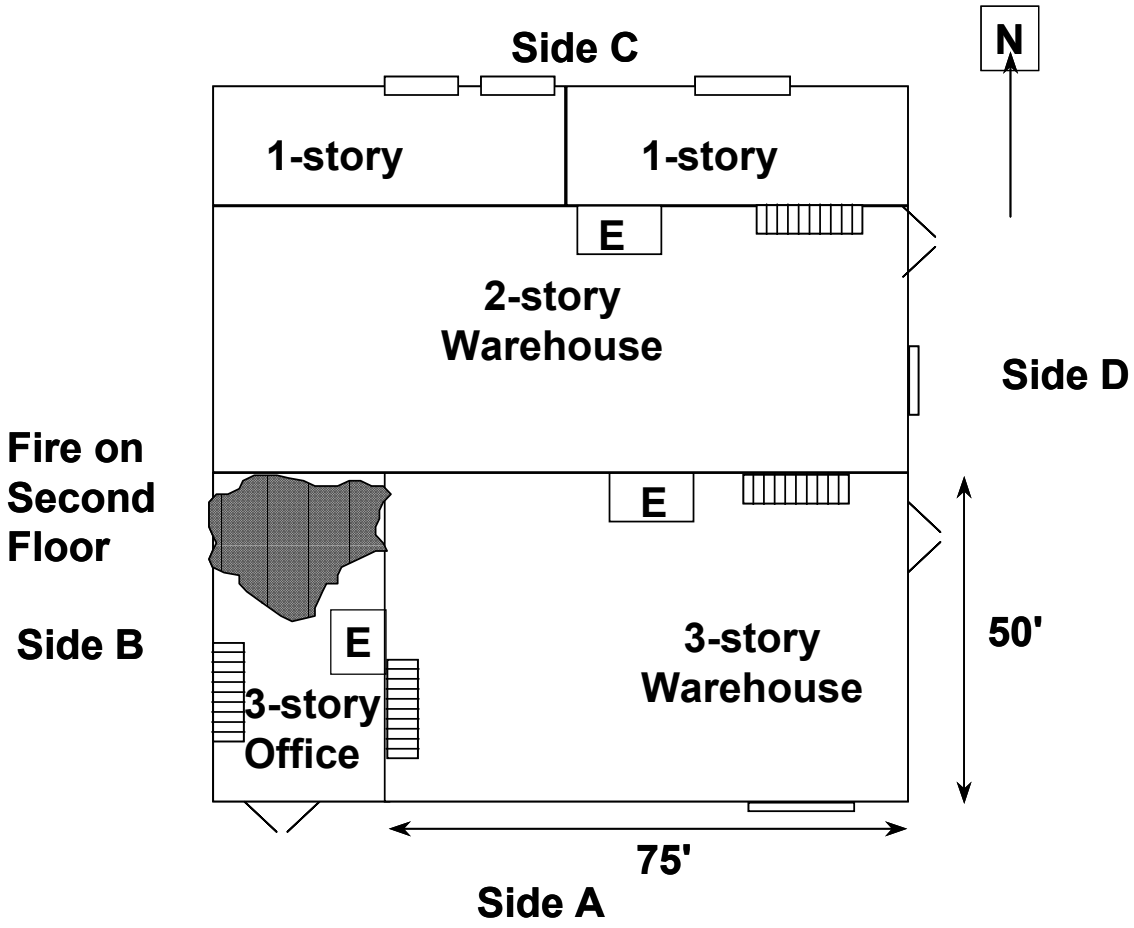

Column #1 Primary Factor Size-Up Chart		
Pertinent Factors (P)	(Check appropriate boxes)	P
Life Hazard	Occupants	
	Firefighters	
Location/Fire	Fire Bldg/ Exposures on Arrival	
	After Arrival – Burn Time	
	Radiation/Conduction/Convection	
Construction	Fire Building	
	Exposures	
Occupancy (Contents)	Fire Building	
	Exposures	
Height	Fire Building (Front/Rear)	
	Exposures (Front/Rear)	
Area	Fire Building/Configuration	
	Proximity of Exposures /Config.	
Structural Collapse	Fire Building	
	Exposures	
	Collapse Zone	
	Apparatus Placement	
Weather	Visibility	
	Temperature/Humidity	
	Wind – Direction/Velocity	
Resource Requirement	Apparatus/Personnel/Equipment - RIC	
	Water Supply/Suppression Agent	
Auxiliary Appliances	Fire Building Supplied	
	Exposures Supplied	
Topography	Street Conditions	
Explosions/ Back Draft	Flash Over Conditions	
Time	Duration of Operations (Rest-Rehab) Time of Day Time of Alarm	

Column #2 Incident Objectives Attainable/ Measurable/ Flexible

Examples of Incident Objectives:

- Safe Removal of All Occupants.
- Contain and Control Fire to Room/Building of Origin.
- Contain, Control and Limit Fire in Exposures.
- Other.

List Incident Objectives:

1. _____
2. _____
3. _____
4. _____
5. _____
6. _____
7. _____
8. _____
9. _____
10. _____

Column #3 Activities (Strategies)

[R] Rescue
- Interior/Exterior/Both

[E] Exposure Protection
- Exposure Examination

[C/E] Confinement/Extinguishment
- Hose Line Replacement

[O] Overhaul
- Expose Hidden Fire

[V] Ventilation
- Removal of Occupants
- Fire Control

[S] Salvage
- Water – Run-Off
- Apply Covers

Forcible Entry
- Location
- Method

Special Equipment
- Imaging Cameras

List Incident Strategies	Assign To:
1.	
2.	
3.	
4.	
5.	
6.	
7.	
8.	
9.	
10.	

Column #4 Evaluate Effect of Activities (Strategies) Every 10 Minutes

Effective	Ineffective

Identify alternative strategies for firefighter safety when occupant safety has been determined not to be a Primary Factor.

- _____
- _____
- _____
- _____
- _____
- _____
- _____

Command Sequence Cycle:

Sizeup:

Objectives:

Strategy(ies):

Tactics:

Implement:

Evaluate:

Scenario 3

567 J Street

Building Description:

250' x 90', three-story, Type I, fire-resistive construction.

Occupancy: Office building.

Fire Location: 567 J St.

Fire is in the first floor front occupancy. Involvement is approximately 30 percent.

Time:

0700 hours.

Water Available:

Closest hydrant is 4,000 feet to the south.

Resources Available:

1st Alarm:
E-1
E-2
E-3
T-1
T/T 1--2,000 gallons
T/T 2--2,000 gallons
BC-1

Staffing: four firefighters per apparatus.

Floor Plan
Typical all Floors--Fire on First Floor
567 J Street

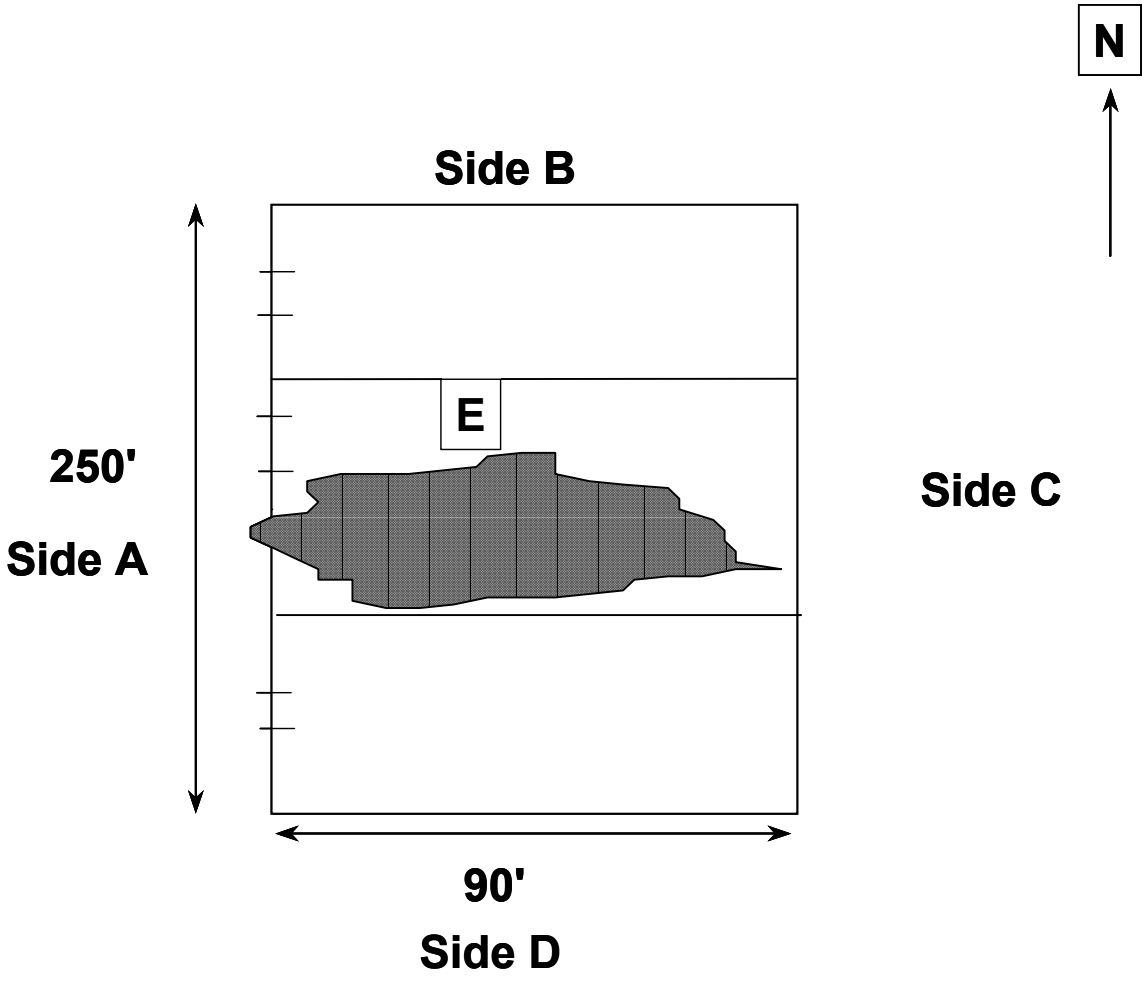

Column #1 Primary Factor Size-Up Chart		
Pertinent Factors (P)	(Check appropriate boxes)	P
Life Hazard	Occupants	
	Firefighters	
Location/Fire	Fire Bldg/ Exposures on Arrival	
	After Arrival – Burn Time	
	Radiation/Conduction/Convection	
Construction	Fire Building	
	Exposures	
Occupancy (Contents)	Fire Building	
	Exposures	
Height	Fire Building (Front/Rear)	
	Exposures (Front/Rear)	
Area	Fire Building/Configuration	
	Proximity of Exposures /Config.	
Structural Collapse	Fire Building	
	Exposures	
	Collapse Zone	
	Apparatus Placement	
Weather	Visibility	
	Temperature/Humidity	
	Wind – Direction/Velocity	
Resource Requirement	Apparatus/Personnel/Equipment - RIC	
	Water Supply/Suppression Agent	
Auxiliary Appliances	Fire Building Supplied	
	Exposures Supplied	
Topography	Street Conditions	
Explosions/ Back Draft	Flash Over Conditions	
Time	Duration of Operations (Rest-Rehab) Time of Day Time of Alarm	

Column #2 Incident Objectives Attainable/ Measurable/ Flexible

Examples of Incident Objectives:

- Safe Removal of All Occupants.
- Contain and Control Fire to Room/Building of Origin.
- Contain, Control and Limit Fire in Exposures.
- Other.

List Incident Objectives:

1. _____
2. _____
3. _____
4. _____
5. _____
6. _____
7. _____
8. _____
9. _____
10. _____

Column #3 Activities (Strategies)

[R] Rescue
- Interior/Exterior/Both

[E] Exposure Protection
- Exposure Examination

[C/E] Confinement/Extinguishment
- Hose Line Replacement

[O] Overhaul
- Expose Hidden Fire

[V] Ventilation
- Removal of Occupants
- Fire Control

[S] Salvage
- Water – Run-Off
- Apply Covers

Forcible Entry
- Location
- Method

Special Equipment
- Imaging Cameras

List Incident Strategies	Assign To:
1.	
2.	
3.	
4.	
5.	
6.	
7.	
8.	
9.	
10.	

Column #4 Evaluate Effect of Activities (Strategies) Every 10 Minutes

Effective	Ineffective

Identify alternative strategies for firefighter safety when occupant safety has been determined not to be a Primary Factor.

- _____
- _____
- _____
- _____
- _____
- _____
- _____

Command Sequence Cycle:

Sizeup:

Objectives:

Strategy(ies):

Tactics:

Implement:

Evaluate:

Activity 5.2

Salvage

Purpose

To learn where to use the command sequence cycle to develop an action plan for salvage operations.

Directions

1. The class will be divided into table groups.

2. There are two scenarios for salvage operations.

3. A floor/plot plan is in the SM for each occupancy. The floor/plot plans show the amount of involvement in the building.

4. You will be shown several slides of the building's various sides and one slide showing smoke and/or fire.

5. The instructor will assign one scenario to each group. Look at your floor/plot plans for the scenario.

6. Each group will develop a salvage operations action plan using the command sequence cycle for its assigned scenario. Use the Primary Factors Chart and complete the Student Activity Worksheet.

7. Groups will be required to report back to the class their action plans using the command sequence cycle.

8. Each group has 10 minutes to complete its assignment.

Activity 5.2 (cont'd)

Scenario 1

122 M Street

Building Description:

50' x 90', three-story, Type V, wood-frame construction.

Occupancy: Garden apartment complex.

One section, four apartments per floor--total 12 apartments.

Fire Location: 122 M St.

Fire is on the third floor rear apartment. Involvement is approximately 50 percent. Occupant of apartment directly below the fire reports that he/she has a valuable art collection in his/her living room and den.

Time:

1500 hours.

Water Available:

Hydrant area--hydrants at every corner--system flow = 1,500 gpm.

Resources Available:

1st Alarm:
E-1
E-2
E-3
T-1
SQ-1
BC-1

Staffing: four firefighters per apparatus.

Plot Plan

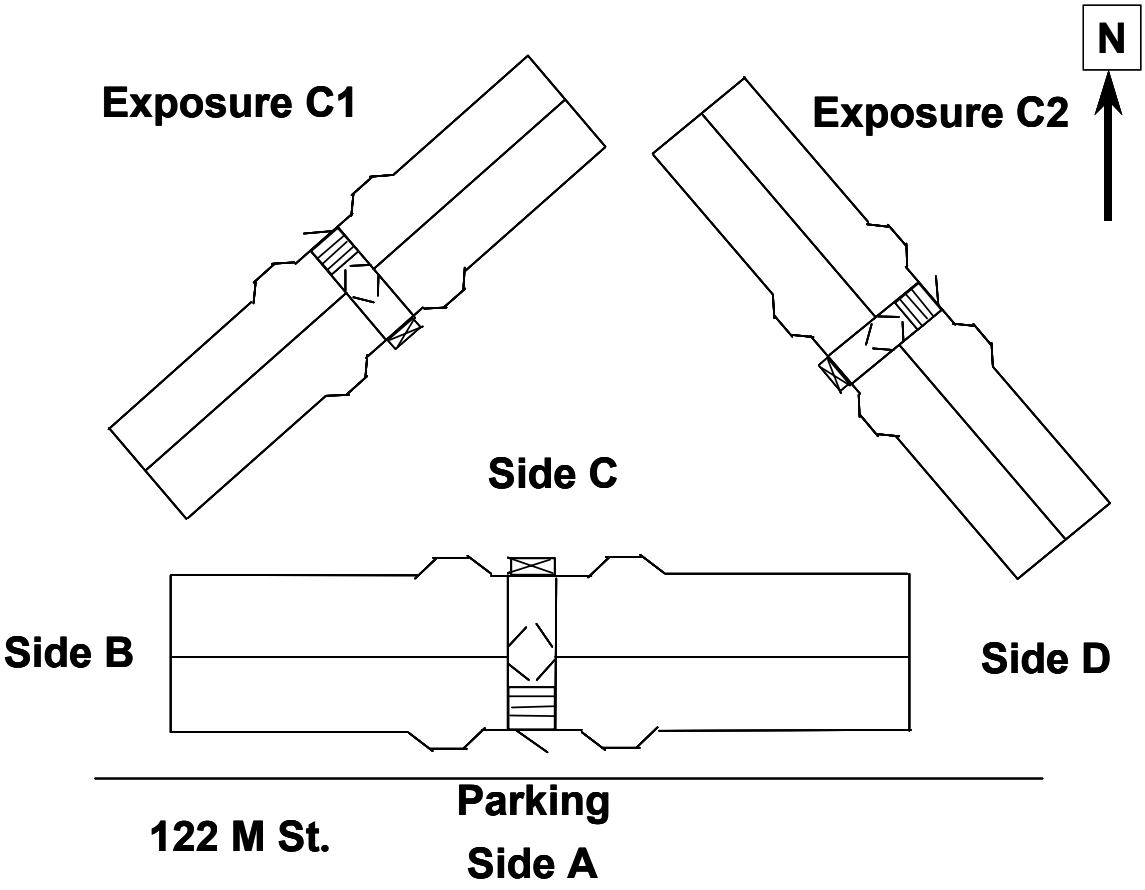
N
Exposure C1
Exposure C2
Side C
Side B
Side D
Parking
122 M St.
Side A

Floor Plan

Third Floor

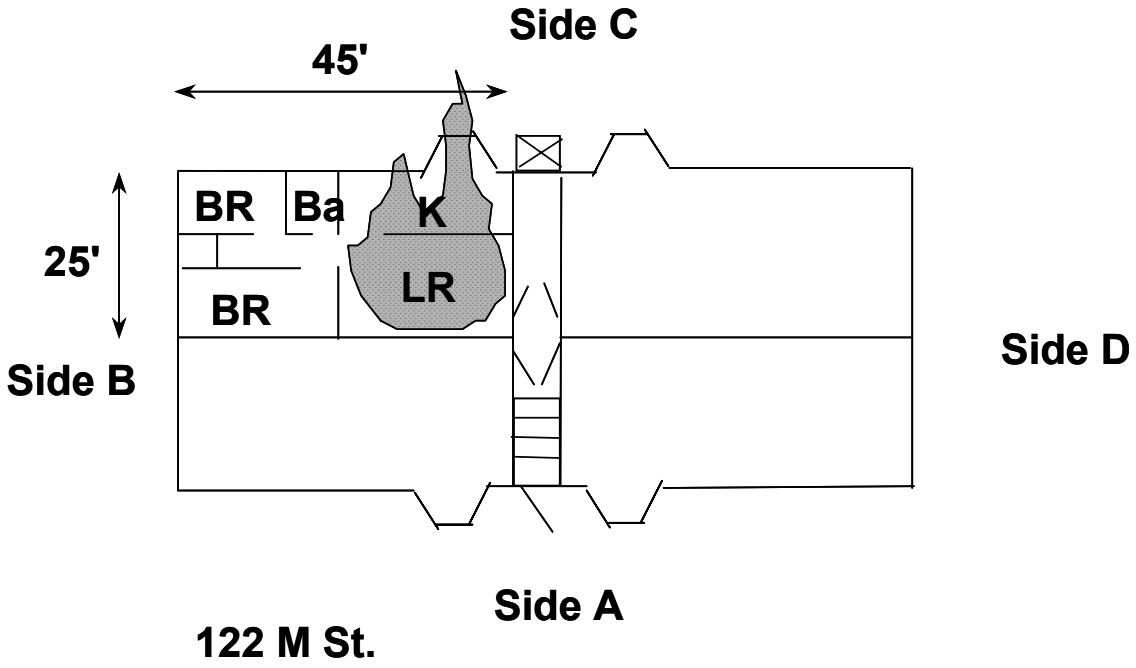

Column #1 Primary Factor Size-Up Chart		
Pertinent Factors (P)	(Check appropriate boxes)	P
Life Hazard	Occupants	
	Firefighters	
Location/Fire	Fire Bldg/ Exposures on Arrival	
	After Arrival – Burn Time	
	Radiation/Conduction/Convection	
Construction	Fire Building	
	Exposures	
Occupancy (Contents)	Fire Building	
	Exposures	
Height	Fire Building (Front/Rear)	
	Exposures (Front/Rear)	
Area	Fire Building/Configuration	
	Proximity of Exposures /Config.	
Structural Collapse	Fire Building	
	Exposures	
	Collapse Zone	
	Apparatus Placement	
Weather	Visibility	
	Temperature/Humidity	
	Wind – Direction/Velocity	
Resource Requirement	Apparatus/Personnel/Equipment - RIC	
	Water Supply/Suppression Agent	
Auxiliary Appliances	Fire Building Supplied	
	Exposures Supplied	
Topography	Street Conditions	
Explosions/ Back Draft	Flash Over Conditions	
Time	Duration of Operations (Rest-Rehab) Time of Day Time of Alarm	

Column #2 Incident Objectives Attainable/ Measurable/ Flexible

Examples of Incident Objectives:

- Safe Removal of All Occupants.
- Contain and Control Fire to Room/Building of Origin.
- Contain, Control and Limit Fire in Exposures.
- Other.

List Incident Objectives:

1. _____
2. _____
3. _____
4. _____
5. _____
6. _____
7. _____
8. _____
9. _____
10. _____

Column #3 Activities (Strategies)

[R] Rescue
- Interior/Exterior/Both

[E] Exposure Protection
- Exposure Examination

[C/E] Confinement/Extinguishment
- Hose Line Replacement

[O] Overhaul
- Expose Hidden Fire

[V] Ventilation
- Removal of Occupants
- Fire Control

[S] Salvage
- Water – Run-Off
- Apply Covers

Forcible Entry
- Location
- Method

Special Equipment
- Imaging Cameras

List Incident Strategies	Assign To:
1.	
2.	
3.	
4.	
5.	
6.	
7.	
8.	
9.	
10.	

Column #4 Evaluate Effect of Activities (Strategies) Every 10 Minutes

Effective	Ineffective

Identify alternative strategies for firefighter safety when occupant safety has been determined not to be a Primary Factor.

- _____
- _____
- _____
- _____
- _____
- _____
- _____

Command Sequence Cycle:

Sizeup:

Objectives:

Strategy(ies):

Tactics:

Implement:

Evaluate:

Activity 5.2 (cont'd)

Scenario 2

246 10th Street

Building Description:

50' x 75', three-story, Type III, ordinary construction.

Occupancy: Office building.

Connected to a three-story warehouse and two-story warehouse, both of ordinary construction.

Fire Location: 246 10th St.

Fire is on the second floor of warehouse. Involvement is approximately 35 percent. Occupancy below fire area handles water-reactive acids for processing metal products. Acids are stored directly below the second floor fire area.

Time:

1000 hours.

Water Available:

Hydrant area--hydrants at every corner--system flow = 8,000 gpm.

Resources Available:

1st Alarm:
E-1
E-2
E-3
T-1
SQ-1
BC-1

Staffing: four firefighters per apparatus.

Floor Plan

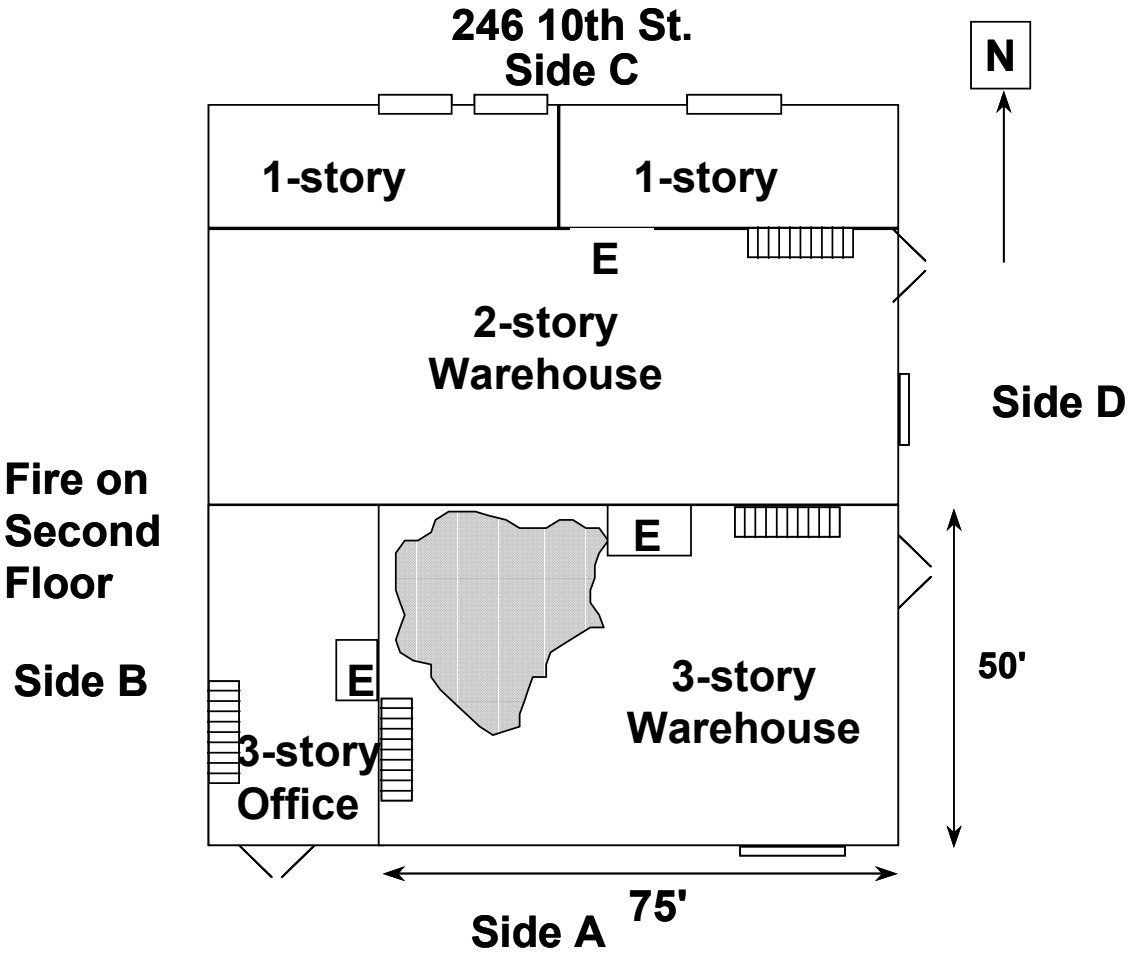
246 10th St.
Side C
N
1-story
1-story
E
2-story
Warehouse
Side D
Fire on
Second
Floor
E
Side B
E
3-story
Warehouse
50'
3-story
Office
75'
Side A

Column #1 Primary Factor Size-Up Chart		
Pertinent Factors (P)	(Check appropriate boxes)	P
Life Hazard	Occupants	
	Firefighters	
Location/Fire	Fire Bldg/ Exposures on Arrival	
	After Arrival – Burn Time	
	Radiation/Conduction/Convection	
Construction	Fire Building	
	Exposures	
Occupancy (Contents)	Fire Building	
	Exposures	
Height	Fire Building (Front/Rear)	
	Exposures (Front/Rear)	
Area	Fire Building/Configuration	
	Proximity of Exposures /Config.	
Structural Collapse	Fire Building	
	Exposures	
	Collapse Zone	
	Apparatus Placement	
Weather	Visibility	
	Temperature/Humidity	
	Wind – Direction/Velocity	
Resource Requirement	Apparatus/Personnel/Equipment - RIC	
	Water Supply/Suppression Agent	
Auxiliary Appliances	Fire Building Supplied	
	Exposures Supplied	
Topography	Street Conditions	
Explosions/ Back Draft	Flash Over Conditions	
Time	Duration of Operations (Rest-Rehab) Time of Day Time of Alarm	

Column #2 Incident Objectives Attainable/ Measurable/ Flexible

Examples of Incident Objectives:

- Safe Removal of All Occupants.
- Contain and Control Fire to Room/Building of Origin.
- Contain, Control and Limit Fire in Exposures.
- Other.

List Incident Objectives:

1. _____
2. _____
3. _____
4. _____
5. _____
6. _____
7. _____
8. _____
9. _____
10. _____

Column #3 Activities (Strategies)

[R] Rescue
- Interior/Exterior/Both

[E] Exposure Protection
- Exposure Examination

[C/E] Confinement/Extinguishment
- Hose Line Replacement

[O] Overhaul
- Expose Hidden Fire

[V] Ventilation
- Removal of Occupants
- Fire Control

[S] Salvage
- Water – Run-Off
- Apply Covers

Forcible Entry
- Location
- Method

Special Equipment
- Imaging Cameras

List Incident Strategies	Assign To:
1.	
2.	
3.	
4.	
5.	
6.	
7.	
8.	
9.	
10.	

Column #4 Evaluate Effect of Activities (Strategies) Every 10 Minutes

Effective	Ineffective

Identify alternative strategies for firefighter safety when occupant safety has been determined not to be a Primary Factor.

- _____
- _____
- _____
- _____
- _____
- _____
- _____

Command Sequence Cycle:

Sizeup:

Objectives:

Strategy(ies):

Tactics:

Implement:

Evaluate:

Activity 5.3
Large Exercise 3

Three-Story Bank/Office Building

Purpose

To apply the Command Sequence to a fire confinement, exposure protection, fire extinguishment, rescue, ventilation, overhaul/support, water supply, fixed fire protection, salvage operations simulated exercise.

Directions

1. You will be assigned to teams of three.

2. Refer to the Command Sequence Tactical Chart (CSTC), and Primary Factor Chart (PFC) in your SM.

3. Two students will jointly assume the role of the first-due engine CO.

4. One student will be the team recorder.

5. Team recorder position will rotate among team members during the large simulations.

6. Team recorder will record all tactical actions taken by the first-due CO onto the CSTC and PFC.

7. Review the CSTC and PFC preparation process.

8. Use your SM for Plot Plan and Building Information.

9. The first chief officer will not arrive on scene for 30 minutes; the first-due CO will manage the incident until the arrival of the chief.

10. Review the primary sizeup factors and visible cues on Slide Sequence #1.

11. On completion of the primary sizeup process, the first-due CO will enter onto the Primary Factor Chart the following information based on the sizeup/cues:

    a. Primary sizeup cues/factors.

    b. Initial objectives.

    c. Initial strategy.

12. Each team will evaluate the effectiveness of its initial objectives, strategy, and tactics (OST), based on visible cues and feedback messages.

13. Each team will adjust or modify its OST as required following the first sizeup.

14. Each team will evaluate the effectiveness of its initial objectives, strategy, and tactics (OST), based on visible cues and feedback messages.

15. Your team will adjust or modify its OST as required following the second sizeup.

16. Each team will evaluate the effectiveness of its current objectives, strategy, and tactics (OST), based on the visible cues and feedback messages.

17. Teams will modify their current OST as required following the third sizeup.

18. Each team will place the transfer of command information onto the Command Sequence Chart using the following format:

    a. Location and extent of fire.

    b. Control efforts.

    c. Deployment of resources.

    d. Need for additional resources.

Floor Plan

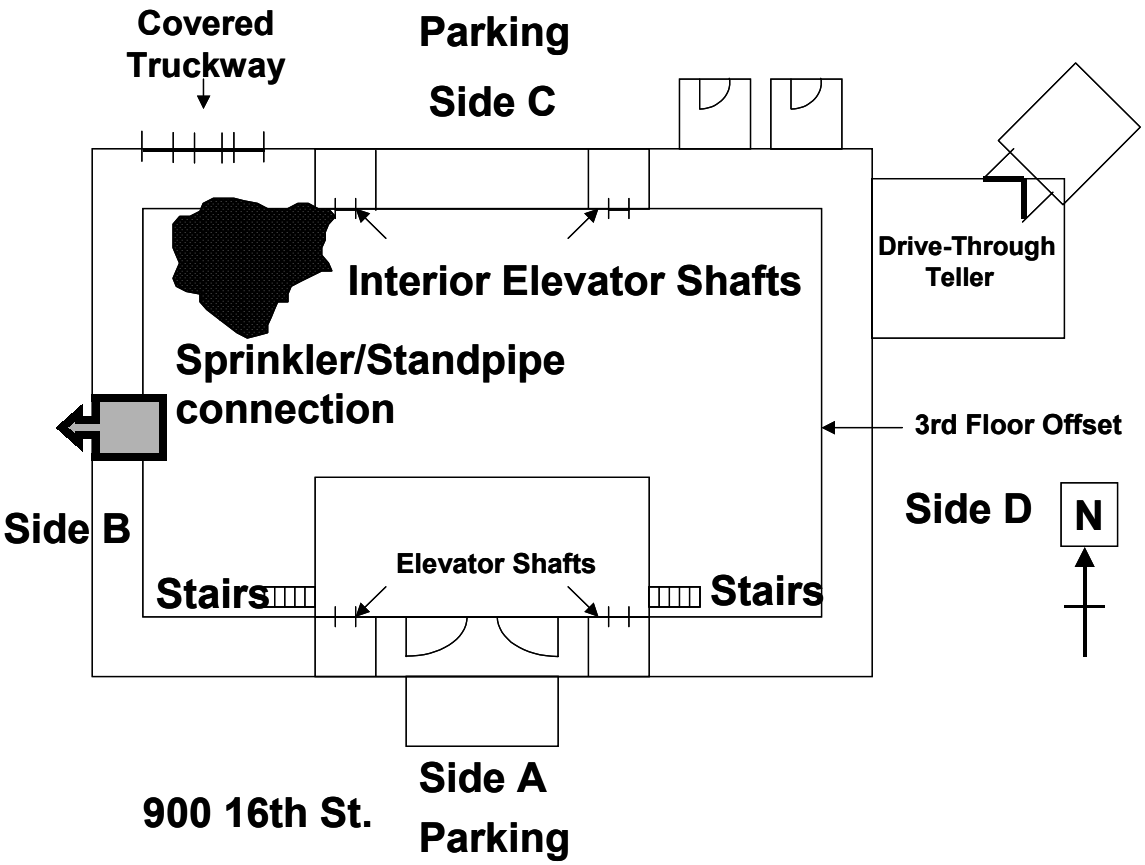
Covered
Truckway
Parking
Side C
Drive-Through
Teller
Interior Elevator Shafts
Sprinkler/Standpipe
connection
3rd Floor Offset
Side B
Side D
N
Elevator Shafts
Stairs
Stairs
Side A
Parking
900 16th St.

COMMAND SEQUENCE TACTICAL CHART

To be completed during simulation:

Tactical Assignment:	Assigned to:	Progress Report:

TRANSFER OF COMMAND CHART

To be completed upon transferring command:

Location and Extent of Fire:	
Control Efforts:	
Deployment of Resources:	
Need for Additional Resources	

Column #1 Primary Factor Size-Up Chart		
Pertinent Factors (P)	(Check appropriate boxes)	P
Life Hazard	Occupants	
	Firefighters	
Location/Fire	Fire Bldg/ Exposures on Arrival	
	After Arrival – Burn Time	
	Radiation/Conduction/Convection	
Construction	Fire Building	
	Exposures	
Occupancy (Contents)	Fire Building	
	Exposures	
Height	Fire Building (Front/Rear)	
	Exposures (Front/Rear)	
Area	Fire Building/Configuration	
	Proximity of Exposures /Config.	
Structural Collapse	Fire Building	
	Exposures	
	Collapse Zone	
	Apparatus Placement	
Weather	Visibility	
	Temperature/Humidity	
	Wind – Direction/Velocity	
Resource Requirement	Apparatus/Personnel/Equipment - RIC	
	Water Supply/Suppression Agent	
Auxiliary Appliances	Fire Building Supplied	
	Exposures Supplied	
Topography	Street Conditions	
Explosions/ Back Draft	Flash Over Conditions	
Time	Duration of Operations (Rest-Rehab) Time of Day Time of Alarm	

Column #2 Incident Objectives Attainable/ Measurable/ Flexible

Examples of Incident Objectives:

- Safe Removal of All Occupants.
- Contain and Control Fire to Room/Building of Origin.
- Contain, Control and Limit Fire in Exposures.
- Other.

List Incident Objectives:

1. _____
2. _____
3. _____
4. _____
5. _____
6. _____
7. _____
8. _____
9. _____
10. _____

Column #3 Activities (Strategies)

[R] Rescue
- Interior/Exterior/Both

[E] Exposure Protection
- Exposure Examination

[C/E] Confinement/Extinguishment
- Hose Line Replacement

[O] Overhaul
- Expose Hidden Fire

[V] Ventilation
- Removal of Occupants
- Fire Control

[S] Salvage
- Water – Run-Off
- Apply Covers

Forcible Entry
- Location
- Method

Special Equipment
- Imaging Cameras

List Incident Strategies	Assign To:
1.	
2.	
3.	
4.	
5.	
6.	
7.	
8.	
9.	
10.	

Column #4 Evaluate Effect of Activities (Strategies) Every 10 Minutes

Effective	Ineffective

Identify alternative strategies for firefighter safety when occupant safety has been determined not to be a Primary Factor.

- _____
- _____
- _____
- _____
- _____
- _____
- _____